WESTERN MOBILE LAKE 4
DAM REHABILITATION

WATER DIVISION 1, WATER DISTRICT 5, BOULDER COUNTY, COLORADO

DAM I.D. 050333

C-2077

VICINITY MAP

LOCATED IN:
SECTION 27, TOWNSHIP 3 NORTH, RANGE 70 WEST,
6TH P.M., BOULDER COUNTY, COLORADO

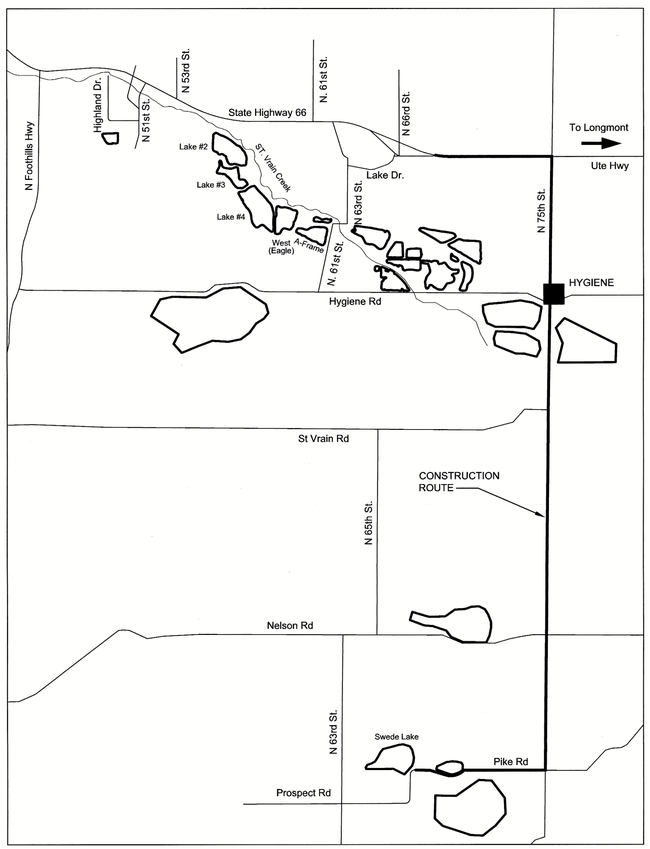

OWNER

BOULDER COUNTY PARKS AND OPEN SPACE DEPARTMENT
5201 SAINT VRAIN RD.
LONGMONT, CO, 80503

ST. VRAIN AND LEFT HAND WATER CONSERVANCY DISTRICT
9595 NELSON RD. #203
LONGMONT, CO 80501

ENGINEER

Engineering Analytics, Inc.
1600 Specht Point Road, Suite 209
Fort Collins, CO 80525
(970) 488-3111

CERTIFICATES

I HEREBY CERTIFY THAT THESE PLANS FOR WESTERN MOBILE LAKE 4 WERE PREPARED BY ME OR UNDER MY DIRECT SUPERVISION FOR THE OWNER THEREOF.

COLORADO REGISTERED LESTER CLINTON BROWN PE 40189 PROFESSIONAL ENGINEER
7-25-2018

LESTER CLINTON BROWN, PE 40189

I, ERIC LANE, DIRECTOR OF BOULDER COUNTY PARKS AND OPEN SPACE DEPARTMENT, OWNER, ON BEHALF OF THE OWNERS, HEREBY ACCEPT THESE PLANS FOR THE WESTERN MOBILE LAKE 4 DAM AND RESERVOIR REHABILITATION.

DIRECTOR

I, SEAN T. CRONIN, OF THE SAINT VRAIN AND LEFT HAND WATER CONSERVANCY DISTRICT, OWNER, ON BEHALF OF THE OWNERS, HEREBY ACCEPT THESE PLANS FOR THE WESTERN MOBILE LAKE 4 DAM AND RESERVOIR REHABILITATION.

DIRECTOR

APPROVED ON THE 20th DAY OF August 2018

STATE ENGINEER OF COLORADO

KEVIN G. REIN
STATE ENGINEER

BY:
WILLIAM T McCORMICK III
CHIEF, DAM SAFETY BRANCH
CO PE #29127

THESE PLANS REPRESENT THE AS-CONSTRUCTED CONDITIONS OF WESTERN MOBILE LAKE 4 DAM AND RESERVOIR REHABILITATION TO THE BEST OF OUR KNOWLEDGE AND JUDGMENT, BASED IN PART ON INFORMATION FURNISHED BY OTHERS AS OF THE

_____ DAY OF _____

LESTER CLINTON BROWN, PE 40189

T:\10446 Western Mobile 4\Cover Sheet.dwg SAVED:7/25/18 PRINTED:7/27/18

GENERAL NOTES

1. IT IS THE RESPONSIBILITY OF THE CONTRACTOR TO LOCATE UTILITIES PRIOR TO CONSTRUCTION. CALL COLORADO ONE CALL BEFORE YOU DIG (UTILITY LOCATES) 1-800-922-1987 OR 811.

2. CONTRACTOR MUST ENSURE THAT ALL EXISTING UTILITIES, ONSITE STRUCTURES, ADJACENT STRUCTURES AND SITES ARE PROTECTED DURING CONSTRUCTION. IT IS THE CONTRACTORS RESPONSIBILITY TO MAKE SURE ALL DAMAGE IS REPAIRED.

3. CONTRACTOR MUST ENSURE THAT ALL ENVIRONMENTAL CONDITIONS ARE PROTECTED THROUGHOUT CONSTRUCTION AND THE SITE IS RESTORED TO A STATE ACCEPTABLE TO THE ENGINEER AND/OR OWNER.

4. PRIOR TO COMMENCING CONSTRUCTION ACTIVITIES, CONTRACTOR SHALL OBTAIN NECESSARY PERMIT(S) FOR STORM WATER DISCHARGE ASSOCIATED WITH CONSTRUCTION ACTIVITY (COR-030000) FROM THE COLORADO DEPARTMENT OF PUBLIC HEALTH AND ENVIRONMENT.

5. THE CONTRACTOR SHOULD USE APRIL 1 THROUGH JULY 31 AS A REASONABLE NESTING SEASON TO AVOID TREE CUTTING/ CLEARING WORK. BCPOS BIOLOGISTS WILL CLEAR THE SITE FOR OWLS AND RAPTORS THE SPRING FOLLOWING THE START OF CONSTRUCTION IF THE REMOVALS HAVE NOT BEEN ACCOMPLISHED BY THEN.

6. ALL CONCRETE PIPE SHALL BE CLASS III.

7. SITE WORK SHALL NOT BEGIN UNTIL ALL APPLICABLE LICENSES AND CONSTRUCTION PERMITS HAVE BEEN OBTAINED BY THE CONTRACTOR, INCLUDING, BUT NOT LIMITED TO:

   - GENERAL LAND DEVELOPMENT PERMIT (STATE)
   - STORMWATER DISCHARGE PERMIT (STATE)
   - CONSTRUCTION DEWATERING PERMIT (STATE)
   - GRADING PERMIT (CITY AND/ORCOUNTY)

15. THE CONTRACTOR SHALL BE RESPONSIBLE FOR OBTAINING AND SATISFYING THE REQUIREMENTS OF ANY APPLICABLE PERMITS PERTAINING TO WETLANDS, WATERS (BOTH SURFACE AND SUBSURFACE), WATER QUALITY, WATER CONTROL DURING CONSTRUCTION ACTIVITIES, AND EROSION CONTROL.

16. THE OWNER SHALL HAVE OBTAINED A CLEAN WATER ACT (CWA) SECTION 404 PERMIT & OTHER FEDERAL PERMITS/ CLEARANCES FOR THE PROJECT. THE CONTRACTOR SHALL BE RESPONSIBLE FOR COMPLIANCE WITH SAID PERMITS.

17. THE CONTRACTOR SHALL NOT MODIFY PERMITS THAT WERE ALREADY IN PLACE PRIOR TO CONSTRUCTION. IF NECESSARY, THE CONTRACTOR WILL SUBMIT DRAFT CONSTRUCTION RELATED PERMITS TO THE OWNER & ENGINEER FOR REVIEW & APPROVAL PRIOR TO SUBMITTING TO ANY AGENCY AND THEN COPY THE OWNER AND ENGINEER ON ANY FINAL PERMIT APPLICATIONS, RESULTS OR CORRESPONDENCE WITH AGENCIES RELATED TO SAID PERMITS.

18. THE CONTRACTOR SHALL GENERATE A STORM WATER MANAGEMENT PLAN & WILL BE RESPONSIBLE FOR DEVELOPING, INSTALLING AND ENSURING ALL APPLICABLE BMPS ARE INSTALLED AND PROPERLY MAINTAINED.

19. ANY WORK THAT WILL TAKE PLACE IN AND AROUND A WATER BODY MAY BE SUBJECT TO PERIODIC FLOODING. THE CONTRACTOR SHALL BE RESPONSIBLE FOR THE CONTROL OF SURFACE AND SUBSURFACE WATER AND EROSION DURING THE COURSE OF THE WORK. ANY DAMAGE TO THE WORK RESULTING FROM SURFACE FLOWS, BASE FLOWS, OR FLOOD FLOWS, INCLUDING BUOYANCY FORCES, AS A RESULT OF THE CONTRACTOR NOT EFFECTIVELY PROTECTING THE WORK, SHALL BE CORRECTED BY THE CONTRACTOR AT THEIR EXPENSE.

20. EROSION CONTROL MEASURES SHALL REMAIN IN FULL FORCE DURING CONSTRUCTION ACTIVITIES AND AS REQUIRED BY THE GOVERNING JURISDICTION(S).

21. PLANS, PERMITS AND CLARIFICATIONS - THE CONTRACTOR SHALL ENSURE ONE COPY OF THE FOLLOWING PLANS ARE ON SITE AT ALL TIMES:

    A. CONSTRUCTION PLANS
    B. STORMWATER MANAGEMENT PLAN (SWMP)/GRADING, EROSION & SEDIMENT CONTROL (GESC) PLAN
    C. CLEAN WATER ACT (CWA), SECTION 404 PERMIT
    D. ALL OTHER PERMITS REQUIRED FOR THE PROJECT

21. THE CONTRACTOR IS RESPONSIBLE FOR SUPPLYING ALL SUBCONTRACTORS WITH THE APPROVED PLANS AND PERMITS AND VERIFYING THAT ALL CONSTRUCTION IS DONE IN ACCORDANCE WITH THE APPROVED PLANS AND PERMITS. THE CONTRACTOR SHALL CONTACT THE ENGINEER IN WRITING FOR CLARIFICATION OR DISCREPANCIES ON ANY INFORMATION SHOWN IN THE PLANS.

22. REFERENCE STANDARDS - EXCEPT WHERE OTHERWISE PROVIDED FOR IN THESE PLANS AND NOTES, BOULDER COUNTY STANDARDS SHALL APPLY.

23. CONTRACTOR SHALL HAVE ALL HAUL TRUCKS CLEARLY LABELED AND PROVIDE VOLUME CAPACITY OF THE TRUCKS. THIS APPLIES TO ALL HAUL TRUCKS USED TO MOVE FLOOD SEDIMENT AT ANY POINT FOR THE DURATION OF THE PROJECT.

EROSION NOTES

1. THERE SHALL BE NO EARTH-DISTURBING ACTIVITY OUTSIDE THE LIMITS DESIGNATED ON THE ACCEPTED PLANS.

2. ALL REQUIRED PERIMETER SILT AND CONSTRUCTION FENCING SHALL BE INSTALLED PRIOR TO ANY LAND DISTURBING ACTIVITY (STOCKPILING, STRIPPING, GRADING, ETC). ALL OTHER REQUIRED EROSION CONTROL MEASURES SHALL BE INSTALLED AT THE APPROPRIATE TIME IN THE CONSTRUCTION SEQUENCE AS INDICATED IN THE APPROVED PROJECT SCHEDULE, CONSTRUCTION PLANS, AND EROSION CONTROL REPORT.

3. AT ALL TIMES DURING CONSTRUCTION, THE CONTRACTOR SHALL BE RESPONSIBLE FOR PREVENTING AND CONTROLLING ON-SITE EROSION INCLUDING KEEPING THE PROPERTY SUFFICIENTLY WATERED SO AS TO MINIMIZE WINDBLOWN SEDIMENT. THE CONTRACTOR SHALL ALSO BE RESPONSIBLE FOR INSTALLING AND MAINTAINING ALL EROSION CONTROL FACILITIES SHOWN HEREIN.

4. IN ORDER TO MINIMIZE EROSION POTENTIAL, ALL TEMPORARY (STRUCTURAL) EROSION CONTROL MEASURES SHALL:

   A. BE INSPECTED AT A MINIMUM OF ONCE EVERY TWO 2) WEEKS AND AFTER EACH SIGNIFICANT STORM EVENT AND REPAIRED OR RECONSTRUCTED AS NECESSARY IN ORDER TO ENSURE THE CONTINUED PERFORMANCE OF THEIR INTENDED FUNCTION.
   B. REMAIN IN PLACE UNTIL SUCH TIME AS ALL THE SURROUNDING DISTURBED AREAS ARE SUFFICIENTLY STABILIZED AS DETERMINED BY THE ENGINEER.
   C. BE REMOVED AFTER THE SITE HAS BEEN SUFFICIENTLY STABILIZED AS DETERMINED BY THE ENGINEER.

5. DO NOT DISTURB AREAS OUTSIDE CONSTRUCTION LIMITS.

SURVEY INFORMATION

VERTICAL DATUM:
BENCHMARK: NATIONAL GEODETIC SURVEY CONTROL POINT "W 410," A STAINLESS STEEL ROD IN A MONUMENT BOX LYING NORTH OF STATE HIGHWAY 66 (UTE HIGHWAY) IN THE AREA NORTH OF LAKE McINTOSH AT 0.25 MILES WEST OF INTERSECTION OF N. 87TH ST. RECORD ELEVATION = 5115.37 FEET, NAVD 1988.

HORIZONTAL DATUM:
COLORADO STATE PLANE COORDINATES NAD 83 DATUM. HORIZONTAL CONTROL BASED UPON NGS DESIGNATION "H 449"
N=40°12'12.78103" E=-105°09'16.79395" CARTESIAN COORDINATES USED ARE COLORADO STATE PLANE COORDINATES NORTH ZONE.

NOTES:

1. THIS DRAWING IS AT COLORADO STATE PLANE.

2. ALL PROPERTY PINS, INTERSECTION MONUMENTS, AND SECTION CORNERS DISTURBED DURING CONSTRUCTION MUST BE REFERENCED AND REPLACED UNDER THE SUPERVISION OF A LICENSED SURVEYOR.

3. THIS AUTOCAD DRAWING CONTAINS INFORMATION THAT IS NOT VISIBLE ON THE PLOTTED COPY. TO OBTAIN ALL THE INFORMATION THAT IS AVAILABLE IN THIS DRAWING, ALL THE AUTOCAD LAYERS MUST BE TURNED ON AND THAWED.

4. THE SIZE, TYPE AND LOCATION OF ALL KNOWN UNDERGROUND UTILITIES ARE APPROXIMATE WHEN SHOWN ON THESE DRAWINGS. IT SHALL BE THE RESPONSIBILITY OF THE CONTRACTOR TO VERIFY THE EXISTENCE OF ALL UNDERGROUND UTILITIES IN THE AREA OF THE WORK BEFORE COMMENCING NEW CONSTRUCTION. THE CONTRACTOR SHALL BE RESPONSIBLE FOR LOCATING ALL UNDERGROUND UTILITIES AND SHALL BE RESPONSIBLE FOR ALL UNKNOWN UNDERGROUND UTILITIES.

5. ALL PROJECT CONTROL LISTED HEREON IS PROVIDED AS A COURTESY. IT IS THE RESPONSIBILITY OF THE RECIPIENT TO VERIFY THE ACCURACY OF THE COORDINATES AND ELEVATIONS SHOWN PRIOR TO USING THEM FOR ANY PURPOSES.

6. SURVEY WAS CONDUCTED BY CIVIL ARTS (303-682-1131) WITH PORTIONS FROM KING SURVEYORS (970-686-5011).

7. CALL COLORADO ONE CALL BEFORE YOU DIG (UTILITY LOCATES) 1-800-922-1987 OR 811.

SHEET INDEX

1	COVER SHEET
2	SHEET INDEX AND GENERAL NOTES
3	GENERAL NOTES
4	OVERALL SITE PLAN
5	HYDROLOGY/ HYDRAULICS
6	LAKE 4 DAM DEMOLITION PLAN
7	LAKE 4 DAM PLAN AND PROFILE
8	LAKE 4 DAM CROSS-SECTIONS
9	LAKE 4 DAM CROSS-SECTIONS
10	LAKE 4 DAM TYPICAL CROSS-SECTIONS AND FILTER DETAIL
11	CLAY CORE TIE IN DETAIL
12	WEIR DETAILS AND STANDARD DETAILS
13	LAKE 4 SPILLWAY PLAN AND PROFILE
14	LAKE 4 SPILLWAY SECTIONS AND DETAILS
15	OUTLET STRUCTURES PLAN AND PROFILE
16	OUTLET TOWER 1 STRUCTURE DETAILS
17	OUTLET TOWER 2 STRUCTURE DETAILS
18	TOWER DETAILS
19	HANDRAIL AND TRASH RACK DETAILS
20	LAKE 3 EMBANKMENT PLAN AND PROFILE
21	LAKE 3 EMBANKMENT CROSS-SECTIONS
22	LAKE 3 EMBANKMENT TYPICAL CROSS-SECTION
23	LAKE 3 EMBANKMENT SPILLWAY PLAN AND CROSS-SECTION
24	LAKE 3 EMBANKMENT SPILLWAY SECTIONS
25	WEST SIDE EMBANKMENT PLAN AND SECTIONS
26	EROSION AND SEDIMENT CONTROL PLAN AND REVEGETATION PLAN

DRAWING LEGEND

5150	PROPOSED GRADE INDEX CONTOUR
	PROPOSED GRADE INTERMEDIATE CONTOUR
5160	EXISTING GRADE INDEX CONTOUR
	EXISTING GRADE INTERMEDIATE CONTOUR
	ST. VRAIN CREEK
	EXCAVATION AREA LIMIT
	NORMAL HIGH WATER LINE
	IRRIGATION DITCH (PRE-FLOOD LOCATION)
	EXCAVATION AREA LIMIT
	DISTURBED AREA LIMIT
	BASIN BOUNDARY
	LENGTH OF WATERCOURSE
	LENGTH OF CONCENTRATION
	DRAIN
	CENTRIOD OF BASIN
EA-B4	BORING LOCATION AND NUMBER
EA-TP8	TEST PIT LOCATION AND NUMBER
EA-CF3	SLOPE FACE OBSERVATION LOCATION
	CLEANOUT
	MANHOLE
C 6	STRUCTURAL CROSS-SECTION
SEE DETAIL 2 4	STRUCTURAL DETAIL

COLORADO REGISTERED PROFESSIONAL ENGINEER
LEE CLINTON BRUCE
40189
7-25-2018

REVISIONS

Revision	Date	Description
1	7-25-2018	Boulder County Comments

Designed by:
Engineering Analytics, Inc.
1600 Specht Point Road, Suite 209
Fort Collins, CO 80525
(970) 488-3111

WESTERN MOBILE
LAKE 4 DAM
REHABILITATION

SHEET INDEX AND
GENERAL NOTES

Drawn by:	RDP
Designed by:	LCB
Checked by:	LCB
Scale:	As Shown
Project No.	110446
Date:	June 28, 2018

SCALE VERIFICATION:
0 1"
IF NOT ONE INCH ON THIS SHEET, ADJUST SCALE ACCORDINGLY.

SHEETS 26 | SHEET 2

C-2077

T:\110446 Western Mobile A\Cover Sheet.dwg SAVED: 7/25/18 PRINTED: 7/25/18

GENERAL STRUCTURAL NOTES

1. CODE: INTERNATIONAL BUILDING CODE, 2009 EDITION.
2. VERIFY THE LOCATION AND SIZE OF ALL OPENINGS THROUGH FLOORS, WALLS AND ROOFS WITH CIVIL, MECHANICAL AND ELECTRICAL DWG's AND WITH EQUIPMENT FURNISHED.
3. STRUCTURAL MEMBERS SHALL NOT BE CUT FOR PIPES, DUCTS, ETC., UNLESS SPECIALLY DETAILED OR APPROVED IN WRITING BY THE ENGINEER.
4. THE CONTRACTOR IS RESPONSIBLE FOR ALL WORK AND MATERIALS RELATING TO DESIGN, CONSTRUCTION, ERECTION METHODS, BRACING, SHORING, RIGGING, GUYS, SCAFFOLDING, FORM WORK, AND OTHER WORK AIDS REQUIRED TO SAFELY PERFORM THE WORK SHOWN.
5. ALL EXPOSED STEEL TO BE GALVANIZED AFTER FABRICATION.
6. SHOP WELD ALL FABRICATIONS UNO.
7. DESIGN LIVE LOAD FOR BOTH TOWERS, BRIDGE, AND GRATING;
   - 300 LB CONCENTRATED - CENTER SPAN
   - 100 PSF DISTRIBUTED
   - 120 MPH WIND PERPENDICULAR TO BRIDGE

CONCRETE

1. ALL CAST-IN-PLACE CONCRETE SHALL HAVE A MINIMUM OF 28-DAY COMPRESSIVE STRENGTH OF 4500 PSI, EXCEPT THAT CONCRETE SPECIFICALLY DETAILED AS CONCRETE FILL SHALL HAVE A MINIMUM 28-DAY COMPRESSIVE STRENGTH OF 3000 PSI. SEE SPECIFICATIONS FOR ADDITIONAL REQUIREMENTS.
2. REINFORCING STEEL FOR ALL CONCRETE SHALL CONFORM TO ASTM A615, GRADE 60 DEFORMED BARS, UNLESS NOTED OTHERWISE. BAR PLACEMENT TO BE IN ACCORDANCE WITH ACI 318 "BUILDING CODE REQUIREMENTS FOR STRUCTURAL CONCRETE" AND CRSI PUBLICATION "PLACING REINFORCING STEEL".
3. CLEARANCE FOR REINFORCEMENT BARS, UNLESS SHOWN OTHERWISE, SHALL BE:
   a. WHEN PLACED ON GROUND: 3"
   b. EXPOSED TO WATER, WEATHER, BACK FILL OR CONDENSATION: 2"
4. ALL BENDS, UNLESS OTHERWISE SHOWN, SHALL BE 90° STANDARD HOOK AS DEFINED IN LATEST EDITION OF ACI 318.
5. ALL WALL CORNER AND INTERSECTION REINFORCING BARS SHALL BE CONTINUOUS AROUND CORNERS AND THROUGH COLUMNS OR PILASTERS. REINFORCEMENT SHALL BE EXTENDED INTO CONNECTING WALLS AND HOOKED/LAPPED ON THE OPPOSITE FACE OF THE CONNECTING WALL. IN GENERAL, TYPICAL HORIZONTAL WALL REINFORCING IS SHOWN ON EACH FACILITY DWG. WALL CORNER AND INTERSECTION REINFORCING SHALL BE AS ON THE STRUCTURAL DETAILS.
6. UNLESS INDICATED OTHERWISE, CONTRACTOR MAY SPLICE SLAB OR WALL BARS AT LOCATIONS OF THEIR CHOOSING WITH THE ENGINEERS APPROVAL, EXCEPT THAT FOR SUSPENDED SLABS, TOP BARS SHALL BE SPLICED AT MID SPAN AND BOTTOM BARS SHALL BE SPLICED AT THIRD POINTS. SPLICE LOCATIONS SHALL BE ALTERNATED OR STAGGERED. ALL REINFORCEMENT, UNLESS OTHERWISE NOTED, SHALL SATISFY THE FOLLOWING REQUIREMENTS:

WALL AND SLAB REINFORCEMENT - LAP LENGTHS

BAR SIZE		#5 OR SMALLER	#6	#7	#8	#9	#10
CONCRETE DESIGN STRENGTH		4500 PSI					
GRADE 60	TOP BAR	25"	30"	48"	61"	75"	91"
	OTHER BAR	20"	23"	37"	47"	58"	70"

   a. TOP BARS ARE DEFINED AS ANY HORIZONTAL BARS PLACED SUCH THAT MORE THAN 12" OF FRESH CONCRETE IS CAST IN THE MEMBER BELOW THE BAR IN ANY SINGLE POUR. HORIZONTAL WALL BARS ARE CONSIDERED TOP BARS.
   b. TABLE APPLIES TO WALLS AND SLABS WITH 6 INCH MINIMUM CENTER TO CENTER SPACING BETWEEN BARS AND 2 INCH MINIMUM COVER.
   c. TABLE DOES NOT APPLY TO BEAMS OR COLUMNS.
   d. INCREASE LAP SPLICES BY 20% FOR EPOXY COATING.
8. ALL OPENINGS IN CONCRETE WALLS AND SLABS GREATER THAN OR EQUAL TO 8" SHALL BE PROVIDED WITH OPENING REINFORCEMENT PER STANDARD DETAIL.
9. CONCRETE CONSTRUCTION JOINTS SHALL BE CLEAN AND ROUGHENED TO A MINIMUM AMPLITUDE OF 1/4".
10. WATERSTOP SHALL BE 6" PVC BY GREENSTREAK MODEL #722 CENTERED IN SLAB OR WALL SHALL BE INSTALLED IN ALL CONSTRUCTION JOINTS IN WALLS OF WATER HOLDING BASINS, CHANNELS, AND CONTAINMENT AREAS, EXCEPT WHERE INDICATED OTHERWISE.
11. REFER TO SPECIFICATIONS FOR COMPLETE REQUIREMENTS.
12. ALL ANCHOR BARS TO BE EPOXY COATED. ANCHOR BARS CONNECT NEW CONCRETE TO EXISTING CONCRETE.
13. ALL JOINTS AT EXISTING CONCRETE TO BE ROUGHENED TO PROVIDE 1/4" AMPLITUDE.

ABBREVIATIONS

AC	ACRE	EX	EXAMPLE	R	RADIUS
AC-FT	ACRE-FEET	EXIST	EXISTING	RCP	REINFORCED CONCRETE PIPE
APPROX	APPROXIMATE	EXP	EXPANSION	REIN	REINFORCEMENT
BOTT	BOTTOM	FT	FEET	REQD	REQUIRED
℄	CENTERLINE	FTG	FOOTING	REV	REVISION
CFS	CUBIC FEET PER SECOND	GH	GAGE HEIGHT	ROW	RIGHT-OF-WAY
CJ	CONTROL JOINT	HORIZ	HORIZONTAL	S	SLOPE (FT/FT)
CLR	CLEAR	HS	HEADED STUD	SAN	SANITARY SEWER
CMP	CORRUGATED METAL PIPE	IN	INCHES	SCH	SCHEDULE
CSK	COUNTERSINK	INV	INVERT	SHT	SHEET
CTD	CENTERED	JT	JOINT	SMH	SANITARY MANHOLE
CTJ	CONSTRUCTION JOINT	L_d	DEVELOPMENT LENGTH	SQ	SQUARE
CY	CUBIC YARD	LF	LINEAR FEET	SS	STAINLESS STEEL
DEMO	DEMOLISH	MAX	MAXIMUM	STA	STATION
DET	DETAIL	MH	MANHOLE	STD	STANDARD
DIA	DIAMETER	MIN	MINIMUM	TBD	TO BE DETERMINED
DIP	DUCTILE IRON PIPE	N	NORTHING	TH	TEST HOLE
DNS	DO NOT SCALE	NA	NOT APPLICABLE	TOD	TOP OF DAM
D/S	DOWNSTREAM	NGS	NATIONAL GEODETIC SURVEY	TOF	TOP OF FOOTING ELEVATION
E	EASTING	NHWL	NORMAL HIGH WATER LINE	TOW	TOP OF WALL ELEVATION
EA	EACH	NO	NUMBER	TP	TEST PIT
EE	EACH END	NTS	NOT TO SCALE	TSLE	TOP OF SLAB ELEVATION
EF	EACH FACE	OC	ON CENTER	TSTE	TOP OF STEEL ELEVATION
EJ	EXPANSION JOINT	OPNG	OPENING	TYP	TYPICAL
EL	ELEVATION	OW	OUTLET WORKS	UNO	UNLESS NOTED OTHERWISE
ELEV	ELEVATION	PC	POINT OF CURVATURE	U/S	UPSTREAM
EQUIP	EQUIPMENT	PL	PLATE (STEEL)	VERT	VERTICAL
EST	ESTIMATED	PT	POINT OF TANGENCY	WL	WATER LEVEL
EW	EACH WAY	PVI	POINT OF VERTICAL INTERSECTION	WS	WATERSTOP
		PZ	PIEZOMETER		

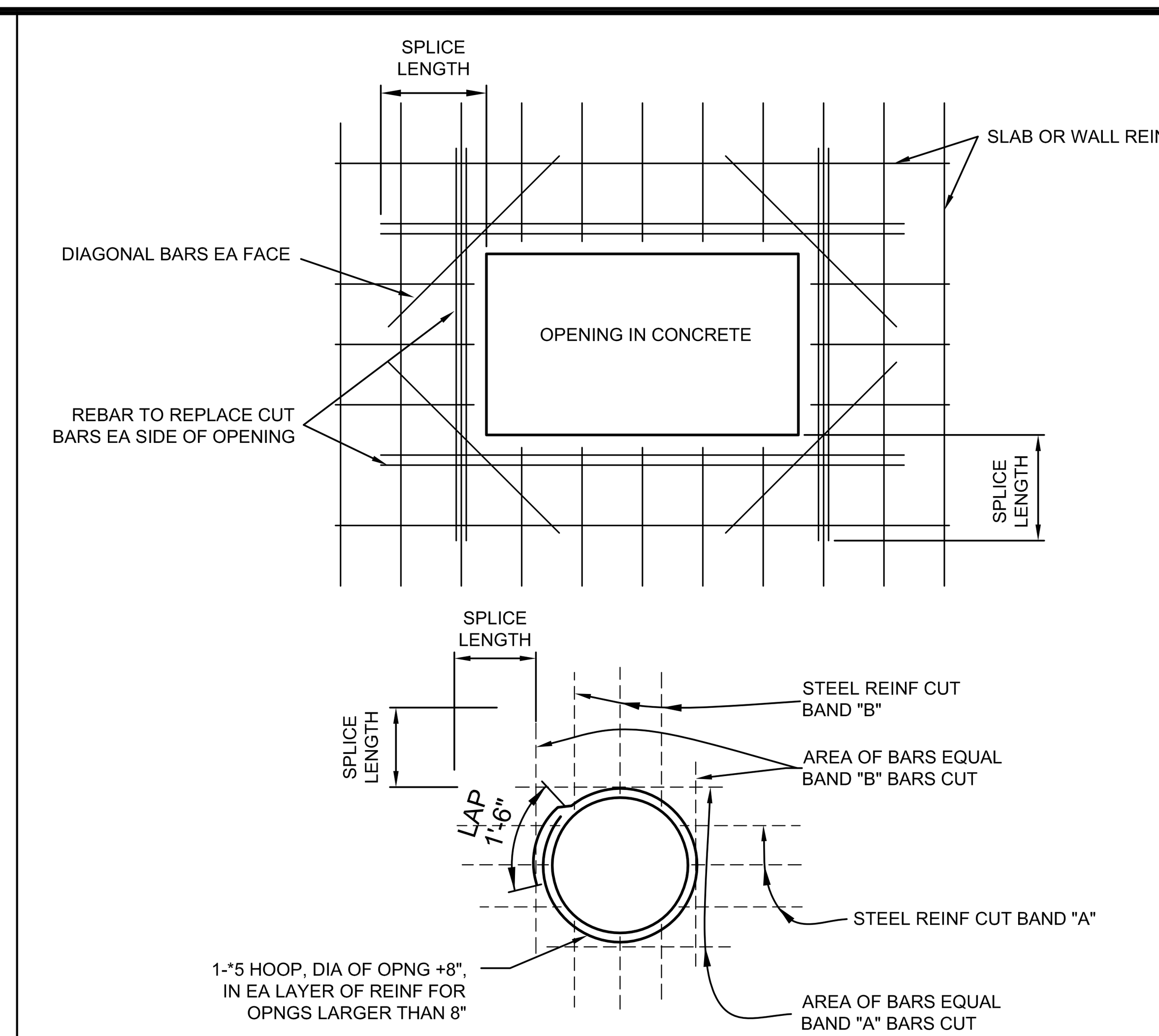

NOTES:

1. ALL REBAR CUT BY AN OPENING SHALL BE REPLACED AT ALL SIDES TO PROVIDE THE SAME QUANTITY OF REBAR AS A WALL OR SLAB WITHOUT AN OPENING.
2. PLACE 'DIAGONAL' BARS AROUND THE OPENING AT EACH CORNER USING THE LARGEST SIZE REBAR CUT. LENGTH IS TWICE SPLICE LENGTH.

WALL AND SLAB OPENING DETAIL
NTS

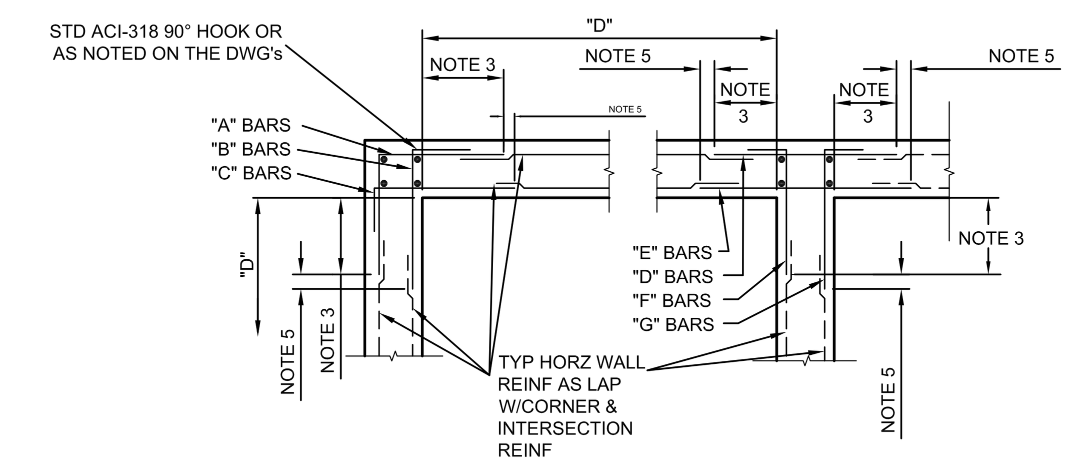

NOTES:

1. TYP HORZ WALL CORNER & INTERSECTION REINF LAYOUT IS SHOWN TO AVOID CONGESTION & PERMIT PROPER PLACEMENT. FOR SIZE & SPACING SEE PLANS. ALL HORZ REINF AT CORNERS & INTERSECTIONS SHALL BE FABRICATED & INSTALLED W/ SPLICES LOCATED WHERE SHOWN REGARDLESS OF BAR SIZE AND SPACING.
2. WHERE THE CORNER OR INTERSECTION REINF SIZE & SPACING IS NOT SHOWN, NOTED OR TABULATED ON THE PLANS, THE SIZE AND SPACING SHALL BE THE SAME AS THE WALL AS NOTED FOR THE REINF SHOWN ON THE WALL SECTIONS OR AS NOTED FOR THE REINF BETWEEN THE CORNERS OR INTERSECTIONS
3. EXCEPT WHERE OTHERWISE SHOWN ON THE DRAWING THE LENGTH INDICATED AS "NOTE 3" SHALL BE THE LESSER OF D/4, 10', OR 1.0 TIMES THE HEIGHT OF THE WALL, EXCEPT THAT IN NO CASE SHALL IT BE LESS THAN MINIMUM LAP LENGTH.
4. D - LENGTH OF WALL PARALLEL TO THE BAR LENGTH IN QUESTION.
5. EXCEPT WHERE OTHERWISE SHOWN ON THE DRAWINGS THE LENGTH INDICATED AS "NOTE 5" SHALL BE EQUAL TO ONE "LAP LENGTH". USE THE LAP LENGTH AS REQUIRED FOR THE SMALLER OF THE TWO REINFORCING BARS BEING SPLICED.
6. UNLESS OTHERWISE NOTED, "B" & "C" BARS ARE THE SAME SIZE & SPACING &, "F" & "G" BARS THE SAME SIZE & SPACING.

TYPICAL CORNER & INTERSECTION REINFORCING DETAIL
NTS

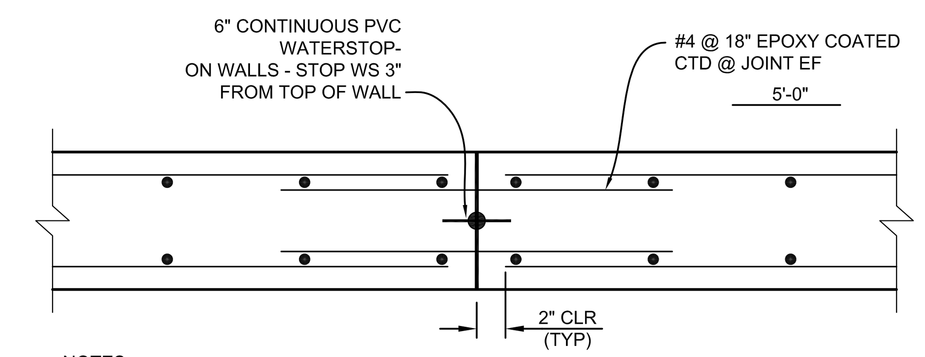

NOTES:

1. CONCRETE CONSTRUCTION JOINTS SHALL BE CLEAN AND ROUGHENED USING EITHER WATER BLASTING OR SAND BLASTING TO A MINIMUM AMPLITUDE OF 1/4".
2. ADJACENT CONCRETE PLACEMENTS REQUIRE 2 DAY DELAY FOR SHRINKAGE.

CONSTRUCTION JOINT

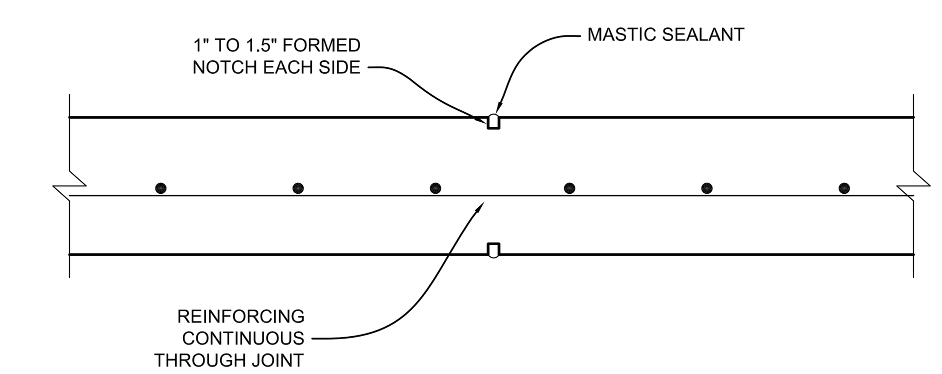

CONTROL JOINT

CONSTRUCTION JOINT (CJ) WALL/SLAB DETAIL WITH WATER STOP
NTS

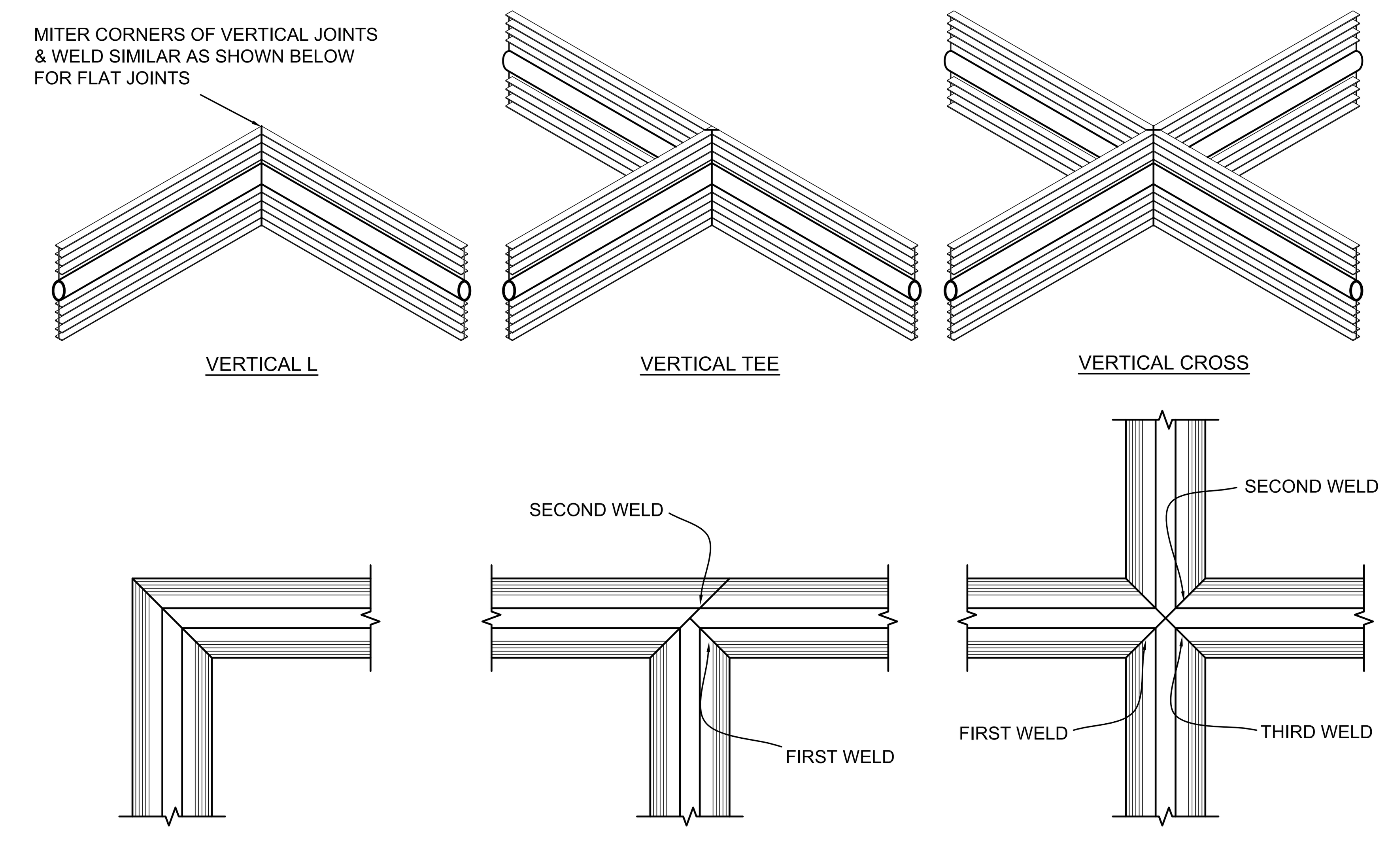

NOTE
ALL WELDS SHALL BE PER WATERSTOP MANUFACTURER'S RECOMMENDATIONS.

WATERSTOP DETAIL
NTS

REVISIONS

Revision	Date	Description
1	7-25-2018	Boulder County Comments

Designed by:
Engineering Analytics, Inc.
1600 Specht Point Road, Suite 209
Fort Collins, CO 80525
(970) 488-3111

WESTERN MOBILE
LAKE 4 DAM
REHABILITATION

GENERAL NOTES

Drawn by:	RDP
Designed by:	LCB
Checked by:	LCB
Scale:	As Shown
Project No.	110446
Date:	June 28, 2018

SCALE VERIFICATION: 0 — 1"
IF NOT ONE INCH ON THIS SHEET, ADJUST SCALE ACCORDINGLY.

SHEETS 26 | SHEET 3

C-2077

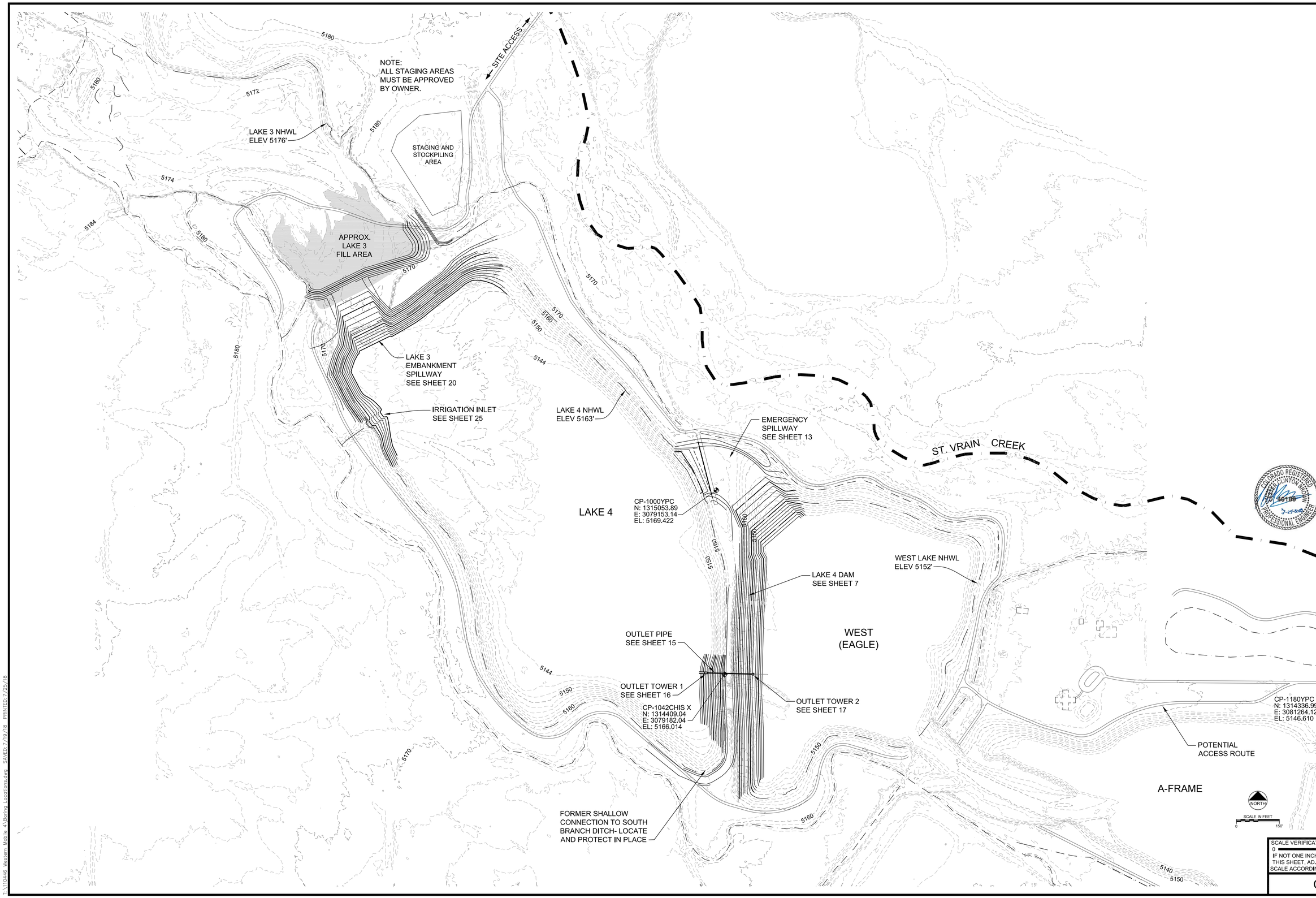

REVISIONS		
Revision	Date	Description
1	7-25-2018	Boulder County Comments

Designed by:

Engineering Analytics, Inc.
1600 Specht Point Road, Suite 209
Fort Collins, CO 80525
(970) 488-3111

WESTERN MOBILE LAKE 4 DAM REHABILITATION

OVERALL SITE PLAN

Drawn by:	RDP
Designed by:	LCB
Checked by:	LCB
Scale:	As Shown
Project No.	110446
Date:	June 28, 2018
SHEETS 26	SHEET 4

SCALE VERIFICATION:
0 1"
IF NOT ONE INCH ON THIS SHEET, ADJUST SCALE ACCORDINGLY.

C-2077

T:\110446 Western Mobile 4\Boring Locations.dwg SAVED: 7/19/18 PRINTED: 7/25/18

LAKE 3 EMBANKMENT SPILLWAY DISCHARGE CURVE

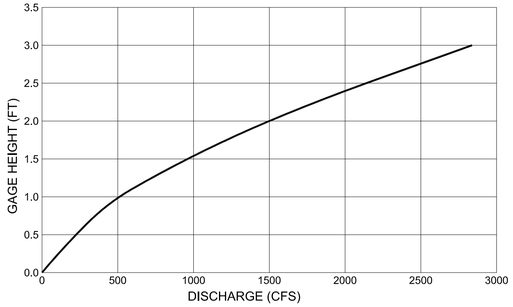

LAKE 3 EMBANKMENT SPILLWAY DISCHARGE

GH (ft)	USGS ELEVATION (ft)	LAKE 3 EMBANKMENT EMERGENCY SPILLWAY DISCHARGE, Q[1] (cfs)
0	5176	0.00
1	5177	516.81
2	5178	1504.26
3	5179	2843.54

LAKE 3 RESERVOIR STORAGE CURVE

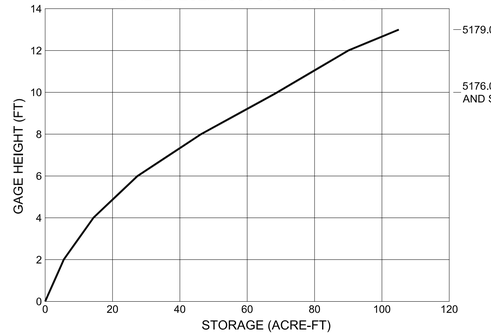

LAKE 3 RESERVOIR STORAGE

GH (ft)	USGS ELEVATION (ft)	STORAGE (acre-ft)
0	5166	0.00
1	5167	2.81
2	5168	5.61
3	5169	10.00
4	5170	14.38
5	5171	20.91
6	5172	27.44
7	5173	36.79
8	5174	46.13
9	5175	57.55
10	5176	68.97
11	5177	79.49
12	5178	90.00
13	5179	105.00

SPILLWAY DISCHARGE CURVE WAS DETERMINED USING HEC-RAS MODELING AND WAS APPROXIMATED USING THE FOLLOWING FITTED POLYNOMIAL EQUATION:

1) $Q = 17.69283x^3 + 282.07698x^2 + 265.06223x - 12.63465$

WHERE:
Q= DISCHARGE (cfs)
x = GAGE HEIGHT (ft)

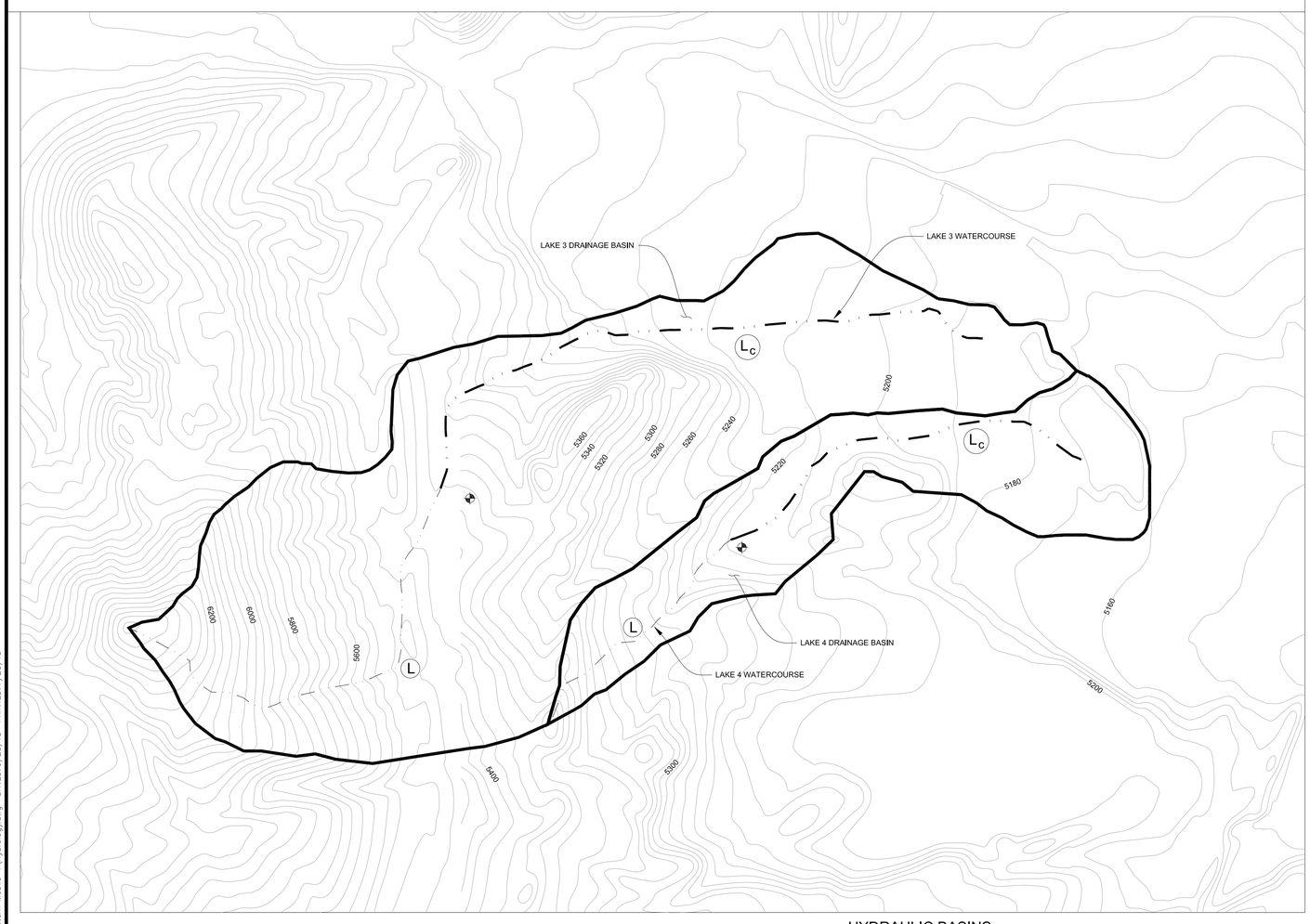

HYDRAULIC BASINS
SCALE: 1" = 50'

LAKE 4 EMERGENCY SPILLWAY DISCHARGE CURVE

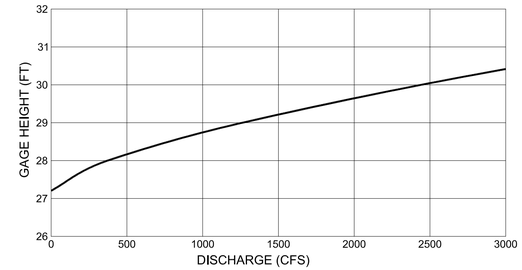

LAKE 4 SPILLWAY DISCHARGE

GH (ft)	USGS ELEVATION (ft)	LAKE 4 EMERGENCY SPILLWAY DISCHARGE, Q[1] (cfs)
27.2	5163.2	0.00
28.0	5164.0	368.96
29.0	5165.0	1255.31
30.0	5166.0	2449.13
30.5	5166.5	3112.49

SPILLWAY DISCHARGE CURVE WAS DETERMINED USING HEC-RAS MODELING AND WAS APPROXIMATED USING THE FOLLOWING FITTED POLYNOMIAL EQUATION:

1) $Q = -26.05604x^3 + 2{,}420.61678x^2 - 73{,}590.24618x + 735{,}114.49230$

WHERE:
Q= DISCHARGE (cfs)
x = GAGE HEIGHT (ft)

LAKE 4 RESERVOIR STORAGE CURVE

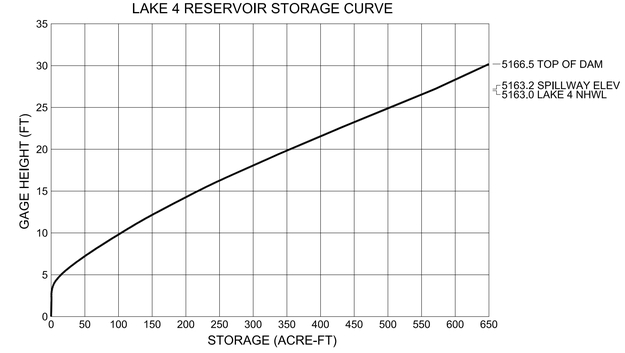

LAKE 4 RESERVOIR STORAGE

GH (ft)	USGS ELEVATION (ft)	STORAGE (acre-ft)
0	5136	0.00
3	5139	1.44
6	5142	28.88
9	5145	83.19
12	5148	146.28
15	5151	218.96
18	5154	296.87
21	5157	382.20
24	5160	470.62
27	5163	562.01
30	5166	645.00
30.5	5166.5	650.00

90° V-NOTCH WEIR DISCHARGE TABLE

DEPTH (ft)	FLOW (cfs)	FLOW (gpm)
0.01	0.000	0.01
0.02	0.000	**0.07**
0.03	0.000	**0.19**
0.04	0.001	**0.38**
0.05	0.001	**0.66**
0.06	0.002	**1.04**
0.07	0.003	**1.53**
0.08	0.005	**2.13**
0.09	0.006	**2.85**
0.10	0.008	**3.70**
0.11	0.010	**4.69**
0.12	0.013	**5.82**
0.13	0.016	**7.09**
0.14	0.019	**8.52**
0.15	0.023	**10.12**
0.16	0.026	**11.87**
0.17	0.031	**13.80**
0.18	0.035	**15.90**
0.19	0.041	**18.18**
0.20	0.046	**20.65**
0.21	0.052	**23.30**
0.22	0.058	**26.15**
0.23	0.065	**29.20**
0.24	0.072	**32.45**
0.25	0.080	**35.91**
0.26	0.088	**39.57**
0.27	0.097	**43.46**
0.28	0.106	**47.56**
0.29	0.116	**51.88**
0.30	0.126	**56.43**
0.31	0.136	**61.22**
0.32	0.148	**66.23**
0.33	0.159	**71.48**
0.34	0.172	**76.98**
0.35	0.184	**82.71**
0.36	0.198	**88.70**
0.37	0.212	**94.93**
0.38	0.226	**101.43**
0.39	0.241	**108.17**
0.40	0.257	**115.18**
0.41	0.273	**122.46**
0.42	0.290	**130.00**
0.43	0.307	**137.81**
0.44	0.325	**145.90**
0.45	0.344	**154.26**
0.46	0.363	**162.90**
0.47	0.383	**171.82**
0.48	0.403	**181.03**
0.49	0.425	**190.53**
0.50	0.446	**200.32**
0.51	0.469	**210.41**
0.52	0.492	**220.79**
0.53	0.516	**231.47**
0.54	0.540	**242.45**
0.55	0.565	**253.74**
0.56	0.591	**265.33**
0.57	0.618	**277.24**
0.58	0.645	**289.46**
0.59	0.673	**301.99**
0.60	0.701	**314.85**
0.61	0.731	**328.02**
0.62	0.761	**341.52**
0.63	0.792	**355.34**
0.64	0.823	**369.50**
0.65	0.856	**383.98**
0.66	0.889	**398.80**
0.67	0.922	**413.95**
0.68	0.957	**429.44**
0.69	0.992	**445.27**
0.70	1.028	**461.45**
0.71	1.065	**477.97**
0.72	1.103	**494.84**
0.73	1.141	**512.06**
0.74	1.180	**529.64**
0.75	1.220	**547.56**

SUMMARY OF LAKE 3 DRAINAGE BASIN PARAMETERS

TOTAL BASIN AREA	A_t	1.43	sq mi
BASIN LENGTH	L	2.97	mi
LENGTH OF CONCENTRATION	L_c	1.47	mi
AVERAGE SLOPE	S	422.0	ft/mi
AVERAGE ROUGHNESS	K_n	0.05	
INITIAL LOSS	IA	0.6	in
WETTING FRONT CAPILLARY SUCTION	PSIF	4.8	in
VOLUMETRIC SOIL MOISTURE DEFICIT	DTHETA	0.26	in
UNIFORM INFILTRATION RATE	XKSAT	0.52	in/hr
IMPERVIOUS AREA	RTIMP	5	%

SUMMARY OF LAKE 4 DRAINAGE BASIN PARAMETERS

TOTAL BASIN AREA	A_t	0.43	sq mi
BASIN LENGTH	L	1.73	mi
LENGTH OF CONCENTRATION	L_c	0.73	mi
AVERAGE SLOPE	S	124.86	ft/mi
AVERAGE ROUGHNESS	K_n	0.05	
INITIAL LOSS	IA	0.6	in
WETTING FRONT CAPILLARY SUCTION	PSIF	4.6	in
VOLUMETRIC SOIL MOISTURE DEFICIT	DTHETA	0.27	in
UNIFORM INFILTRATION RATE	XKSAT	0.50	in/hr
IMPERVIOUS AREA	RTIMP	24	%

COLORADO REGISTERED LAND LICENSE NO. 40188 PROFESSIONAL ENGINEER
7-25-2018

SCALE VERIFICATION:
0 1"
IF NOT ONE INCH ON THIS SHEET, ADJUST SCALE ACCORDINGLY.

REVISIONS

Revision	Date	Description
1	7-25-2018	Boulder County Comments

Designed by:
Engineering Analytics, Inc.
1600 Specht Point Road, Suite 209
Fort Collins, CO 80525
(970) 488-3111

WESTERN MOBILE
LAKE 4 DAM
REHABILITATION

HYDROLOGY/
HYDRAULICS

Drawn by:	RDP
Designed by:	LCB
Checked by:	LCB
Scale:	As Shown
Project No.	110446
Date:	June 28, 2018
SHEETS 26	SHEET 5

C-2077

T:\110446 Western Mobile 4\hydrology.dwg SAVED: 6/28/18 PRINTED: 7/25/18

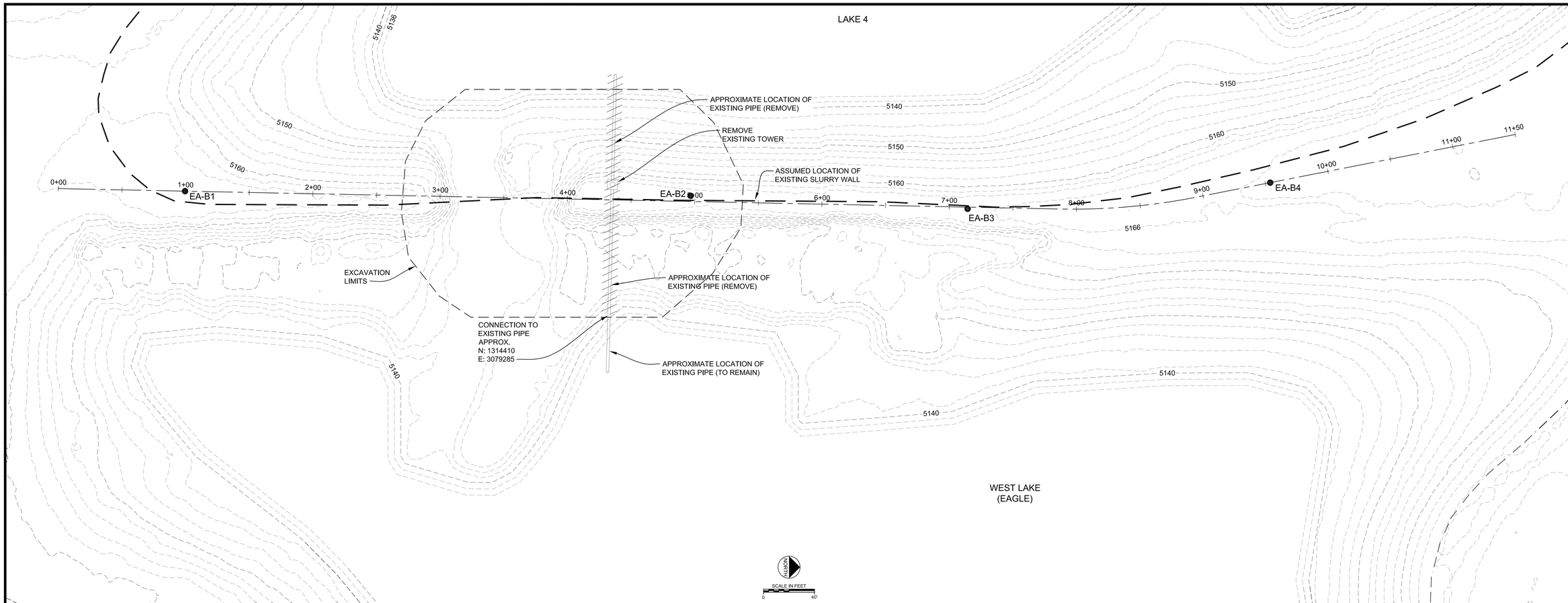

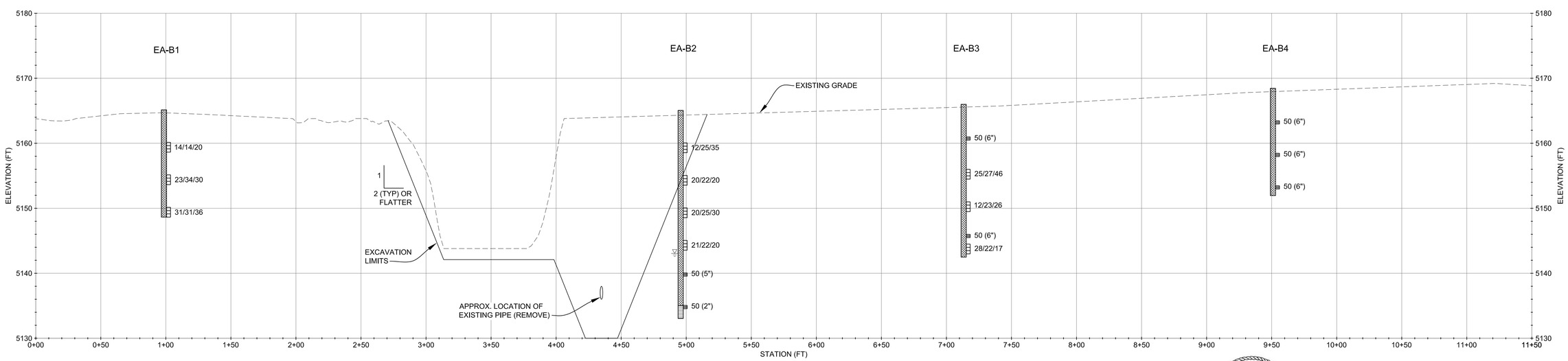

LEGEND:
- FILL
- CLAYSTONE

COLORADO REGISTERED PROFESSIONAL ENGINEER
CLINTON BROWN
40189
7-25-2018

VERTICAL
SCALE IN FEET
0
40'

SCALE VERIFICATION:
0 1"
IF NOT ONE INCH ON THIS SHEET, ADJUST SCALE ACCORDINGLY.

REVISIONS

Revision	Date	Description
1	7-25-2018	Boulder County Comments

Designed by:

Engineering Analytics, Inc.
1600 Specht Point Road, Suite 209
Fort Collins, CO 80525
(970) 488-3111

WESTERN MOBILE LAKE 4 DAM REHABILITATION

LAKE 4 DAM DEMOLITION PLAN

Drawn by:	RDP
Designed by:	LCB
Checked by:	LCB
Scale:	As Shown
Project No.	110446
Date:	June 28, 2018
SHEETS	26
SHEET	6

C-2077

T:\110446 Western Mobile 4\Boring Locations.dwg SAVED: 7/19/18 PRINTED: 7/25/18

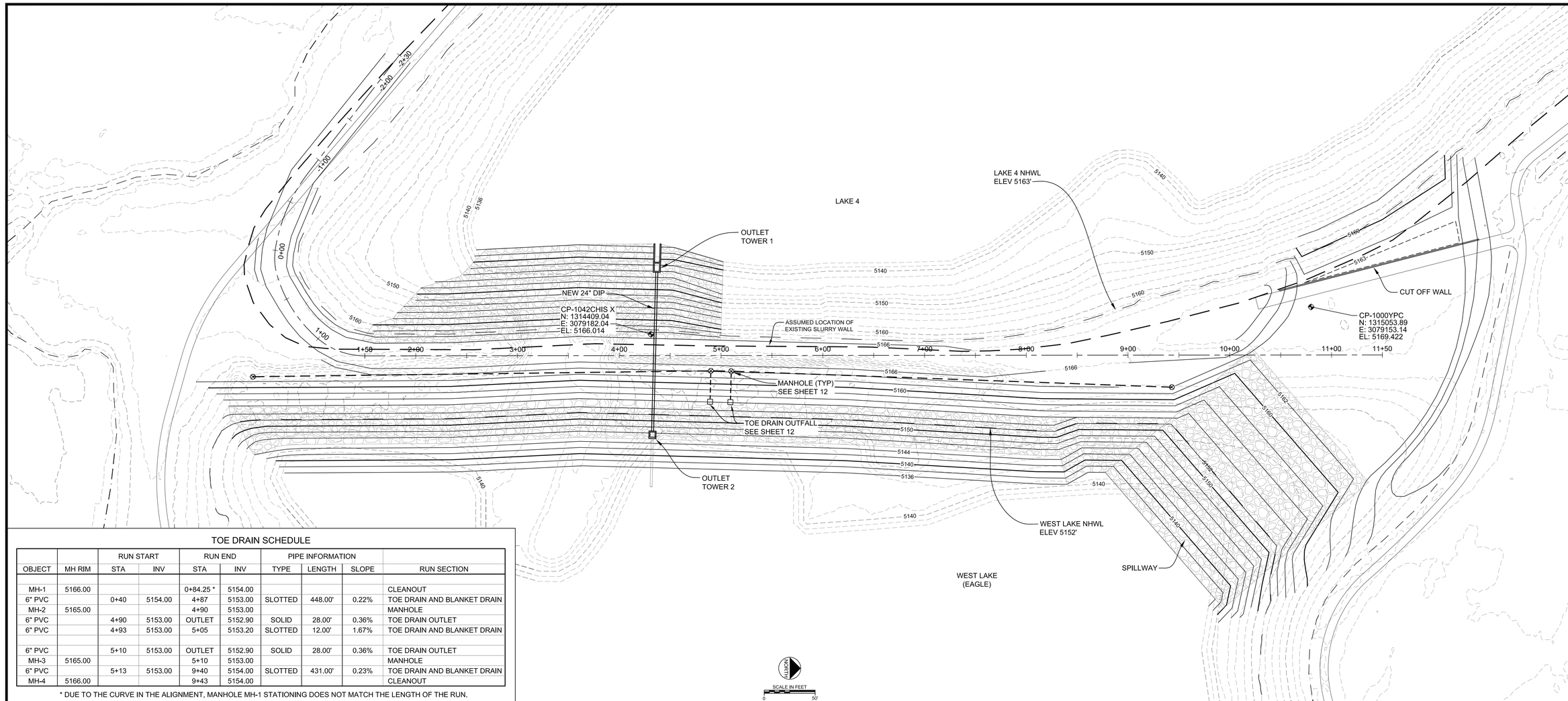

TOE DRAIN SCHEDULE

OBJECT	MH RIM	RUN START STA	RUN START INV	RUN END STA	RUN END INV	PIPE INFORMATION TYPE	PIPE INFORMATION LENGTH	PIPE INFORMATION SLOPE	RUN SECTION
MH-1	5166.00			0+84.25 *	5154.00				CLEANOUT
6" PVC		0+40	5154.00	4+87	5153.00	SLOTTED	448.00'	0.22%	TOE DRAIN AND BLANKET DRAIN
MH-2	5165.00			4+90	5153.00				MANHOLE
6" PVC		4+90	5153.00	OUTLET	5152.90	SOLID	28.00'	0.36%	TOE DRAIN OUTLET
6" PVC		4+93	5153.00	5+05	5153.20	SLOTTED	12.00'	1.67%	TOE DRAIN AND BLANKET DRAIN
6" PVC		5+10	5153.00	OUTLET	5152.90	SOLID	28.00'	0.36%	TOE DRAIN OUTLET
MH-3	5165.00			5+10	5153.00				MANHOLE
6" PVC		5+13	5153.00	9+40	5154.00	SLOTTED	431.00'	0.23%	TOE DRAIN AND BLANKET DRAIN
MH-4	5166.00			9+43	5154.00				CLEANOUT

* DUE TO THE CURVE IN THE ALIGNMENT, MANHOLE MH-1 STATIONING DOES NOT MATCH THE LENGTH OF THE RUN.

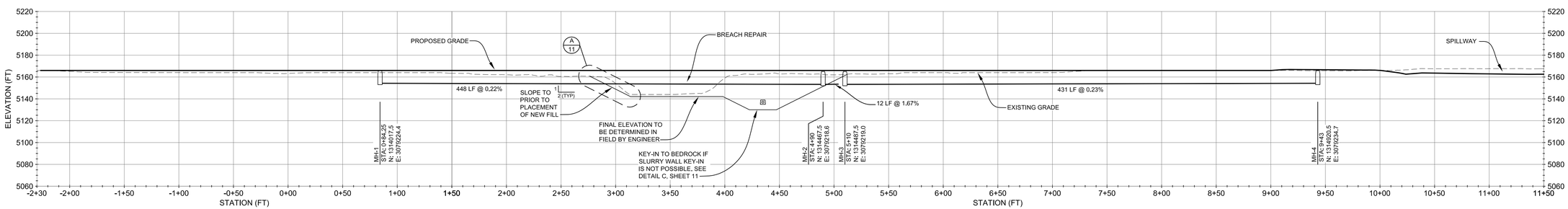

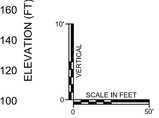

SCALE VERIFICATION:
0 1"
IF NOT ONE INCH ON THIS SHEET, ADJUST SCALE ACCORDINGLY.

REVISIONS

Revision	Date	Description
1	7-25-2018	Boulder County Comments

Designed by:

Engineering Analytics, Inc.
1600 Specht Point Road, Suite 209
Fort Collins, CO 80525
(970) 488-3111

WESTERN MOBILE LAKE 4 DAM REHABILITATION

LAKE 4 DAM PLAN AND PROFILE

Drawn by:	RDP
Designed by:	LCB
Checked by:	LCB
Scale:	As Shown
Project No.	110446
Date:	June 28, 2018
SHEETS	26
SHEET	7

C-2077

T:\110446 Western Mobile 4\Boring Locations.dwg SAVED: 7/19/18 PRINTED: 7/25/18

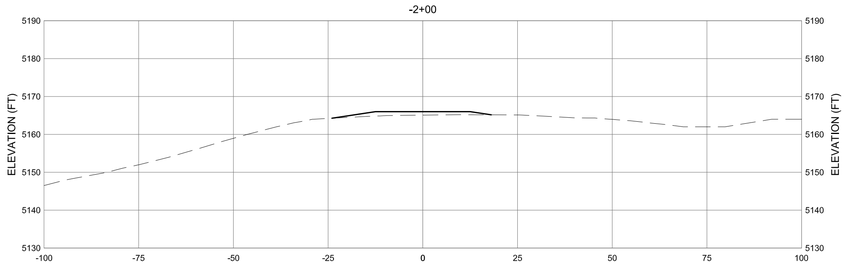

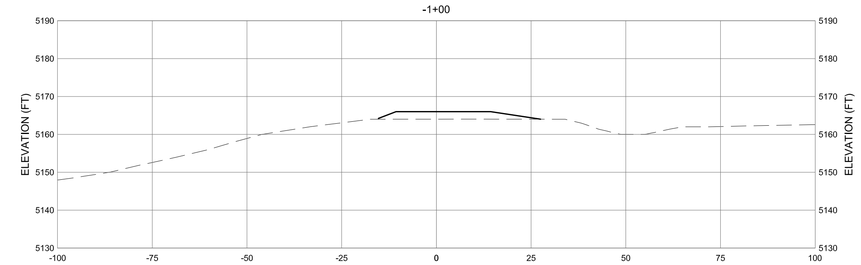

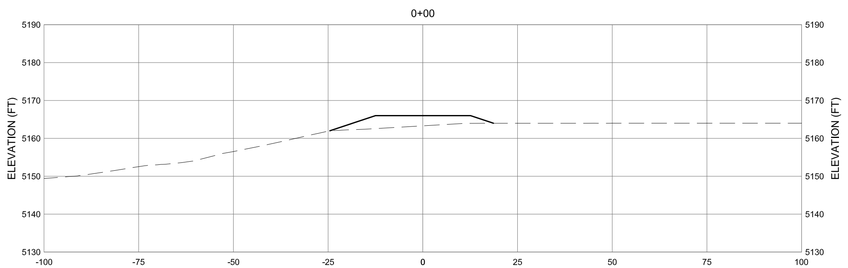

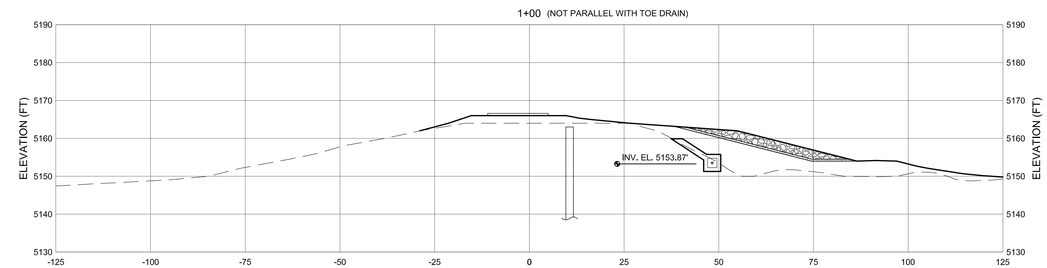

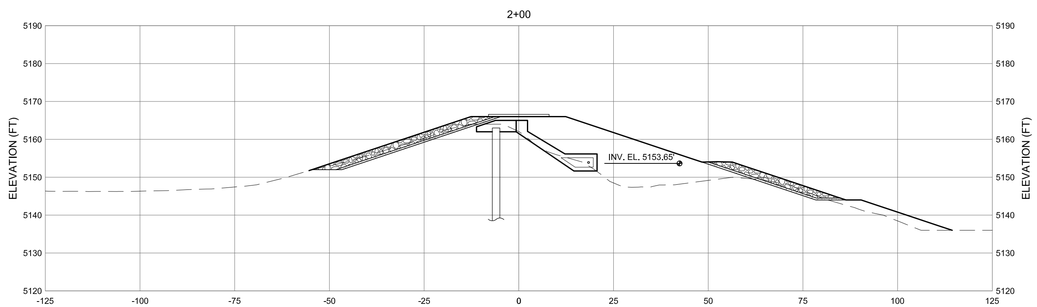

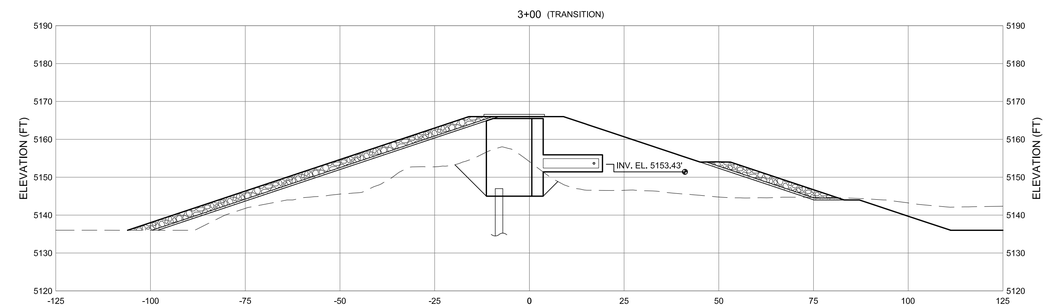

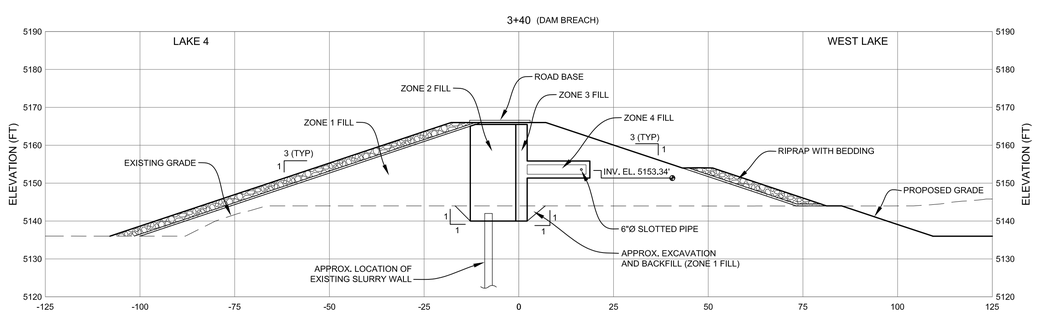

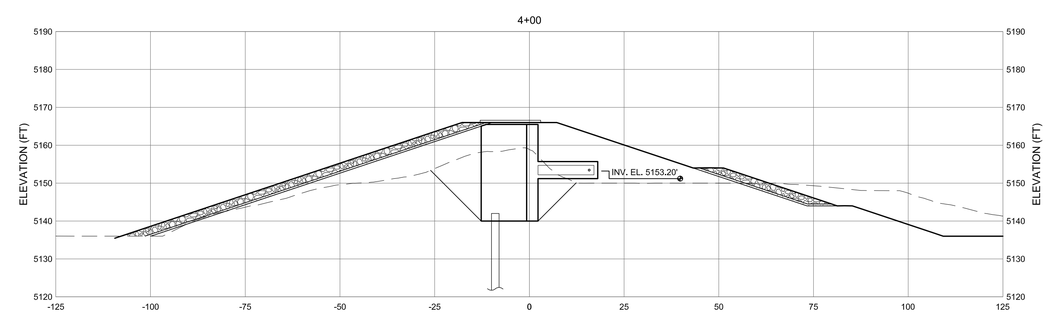

COLORADO REGISTERED PROFESSIONAL ENGINEER
CLINTON BROWN
40189
7-25-2018

SCALE IN FEET
0 20'

SCALE VERIFICATION:
0 1"
IF NOT ONE INCH ON THIS SHEET, ADJUST SCALE ACCORDINGLY.

REVISIONS

Revision	Date	Description
1	7-25-2018	Boulder County Comments

Designed by:

Engineering Analytics, Inc.
1600 Specht Point Road, Suite 209
Fort Collins, CO 80525
(970) 488-3111

WESTERN MOBILE
LAKE 4 DAM
REHABILITATION

LAKE 4 DAM
CROSS-SECTIONS

Drawn by:	RDP
Designed by:	LCB
Checked by:	LCB
Scale:	As Shown
Project No.	110446
Date:	June 28, 2018
SHEETS	26
SHEET	8

C-2077

T:\110446 Western Mobile 4\Boring Locations.dwg SAVED: 7/19/18 PRINTED: 7/25/18

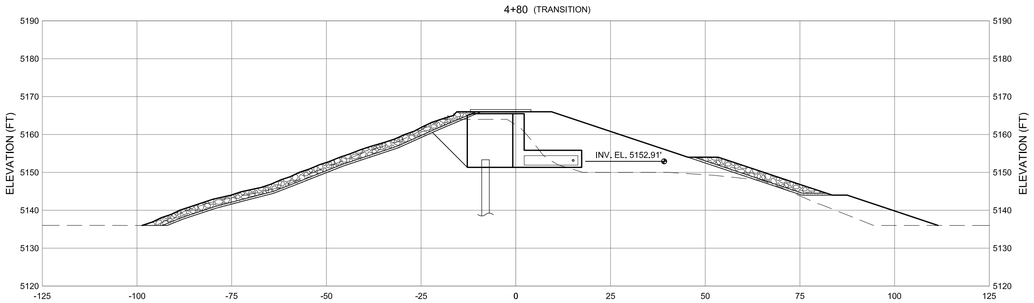

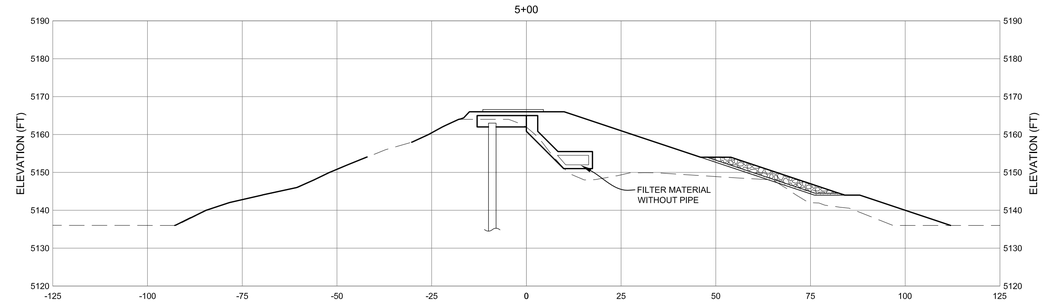

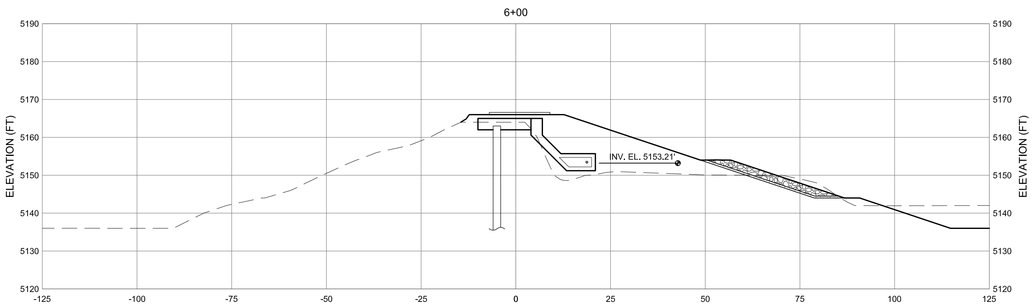

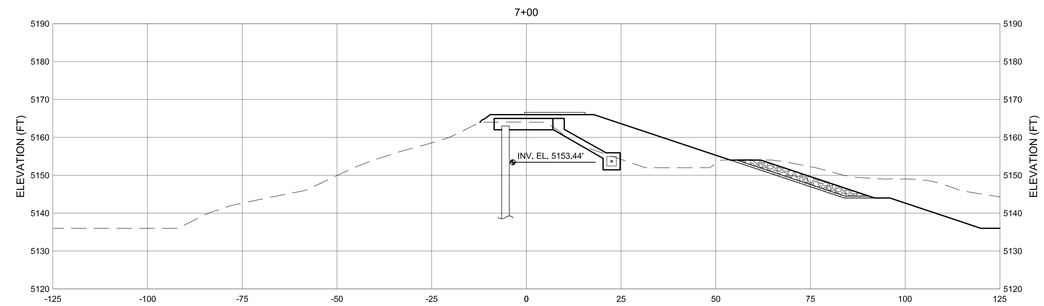

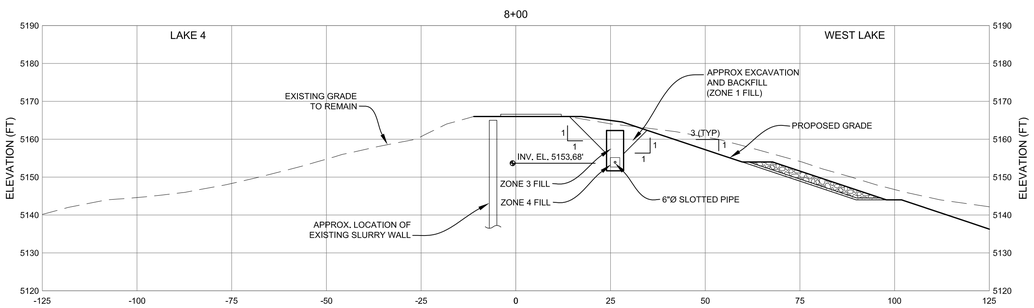

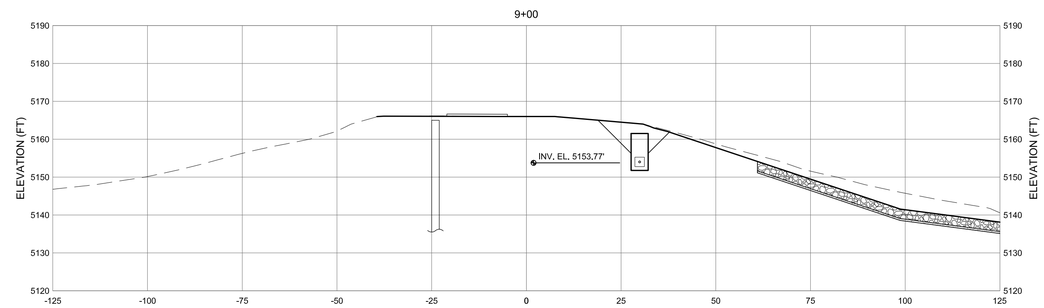

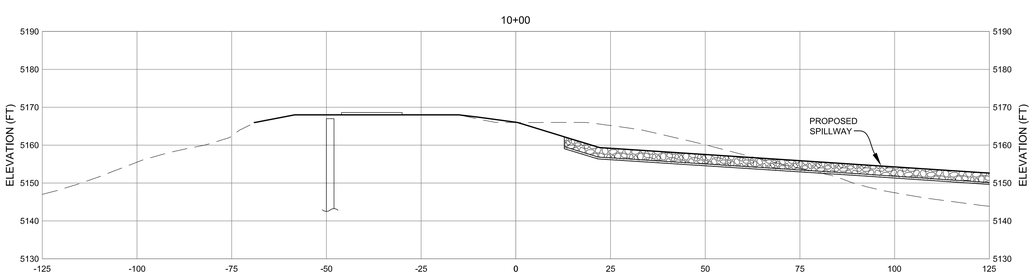

SCALE IN FEET
0 20'

REVISIONS

Revision	Date	Description
1	7-25-2018	Boulder County Comments

Designed by:

Engineering Analytics, Inc.
1600 Specht Point Road, Suite 209
Fort Collins, CO 80525
(970) 488-3111

WESTERN MOBILE
LAKE 4 DAM
REHABILITATION

LAKE 4 DAM
CROSS-SECTIONS

COLORADO REGISTERED
LEAH BRIGHTON BOOTH
PE 40189
7-25-2018
PROFESSIONAL ENGINEER

Drawn by:	RDP
Designed by:	LCB
Checked by:	LCB
Scale:	As Shown
Project No.	110446
Date:	June 28, 2018

SCALE VERIFICATION:
0 1"
IF NOT ONE INCH ON THIS SHEET, ADJUST SCALE ACCORDINGLY.

SHEETS 26 | SHEET 9

C-2077

T:\110446 Western Mobile A\Boring Locations.dwg SAVED: 7/19/18 PRINTED: 7/25/18

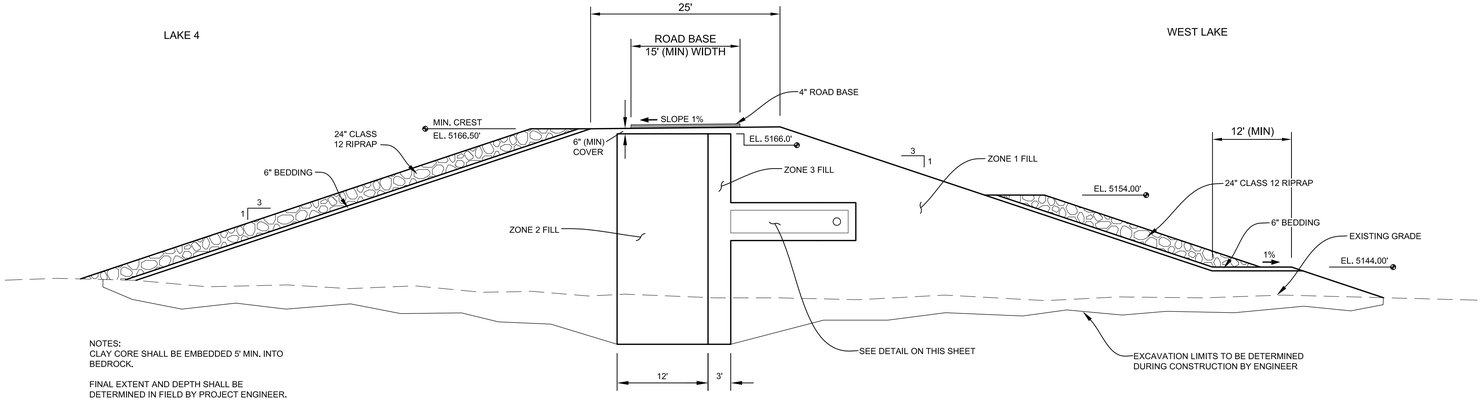

NOTES:
CLAY CORE SHALL BE EMBEDDED 5' MIN. INTO BEDROCK.

FINAL EXTENT AND DEPTH SHALL BE DETERMINED IN FIELD BY PROJECT ENGINEER.

TYPICAL CROSS-SECTION (STA 4+20 TO 4+50)
SCALE: 1" = 10'-0"
5' 0 10'

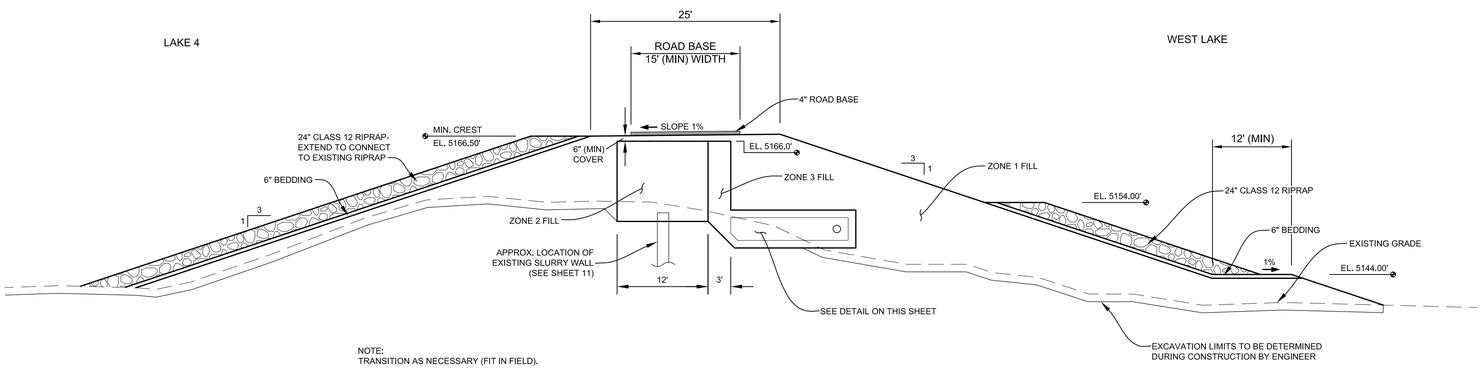

NOTE:
TRANSITION AS NECESSARY (FIT IN FIELD).

TYPICAL TRANSITION CROSS-SECTION (STA 2+80 TO 4+20 AND 4+50 TO 4+90)
SCALE: 1" = 10'-0"
5' 0 10'

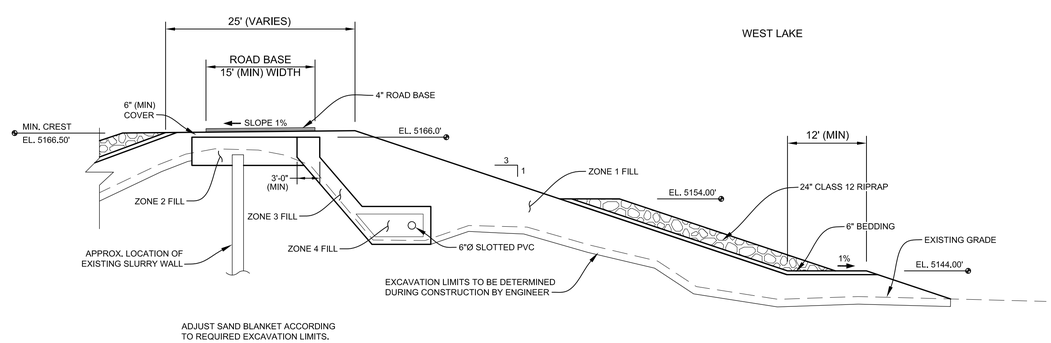

ADJUST SAND BLANKET ACCORDING
TO REQUIRED EXCAVATION LIMITS.

TYPICAL CROSS-SECTION
(STA 0+00 TO 2+80, 4+90 TO 10+00)
SCALE: 1" = 10'-0"
5' 0 10'

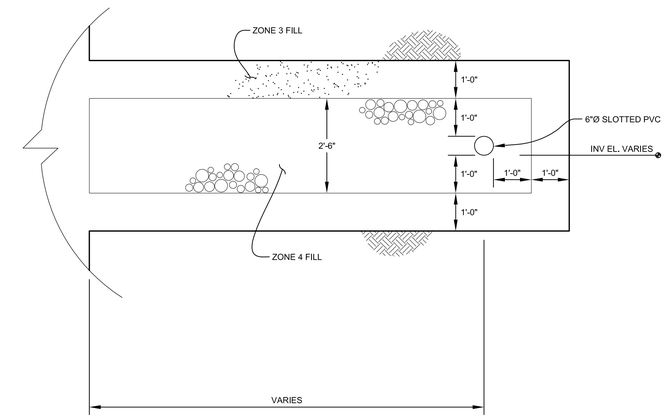

FILTER DETAIL
SCALE: 1/2" = 1'-0"
1' 0 2'

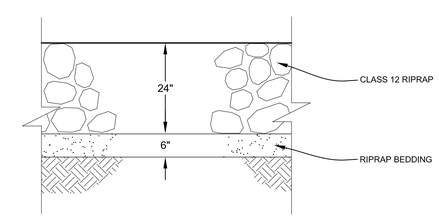

CLASS 12 RIPRAP
NOT TO SCALE

COLORADO REGISTERED PROFESSIONAL ENGINEER
CLINTON BROWN
40189
7-25-2018

SCALE VERIFICATION:
0 1"
IF NOT ONE INCH ON THIS SHEET, ADJUST SCALE ACCORDINGLY.

REVISIONS

Revision	Date	Description
1	7-25-2018	Boulder County Comments

Designed by:
Engineering Analytics, Inc.
1600 Specht Point Road, Suite 209
Fort Collins, CO 80525
(970) 488-3111

WESTERN MOBILE
LAKE 4 DAM
REHABILITATION

LAKE 4 DAM TYPICAL
CROSS-SECTIONS
AND FILTER DETAIL

Drawn by:	RDP
Designed by:	LCB
Checked by:	LCB
Scale:	As Shown
Project No.	110446
Date:	June 28, 2018
SHEETS	26
SHEET	10

C-2077

T:\110446 Western Mobile 4\Boring Locations.dwg SAVED: 7/19/18 PRINTED: 7/25/18

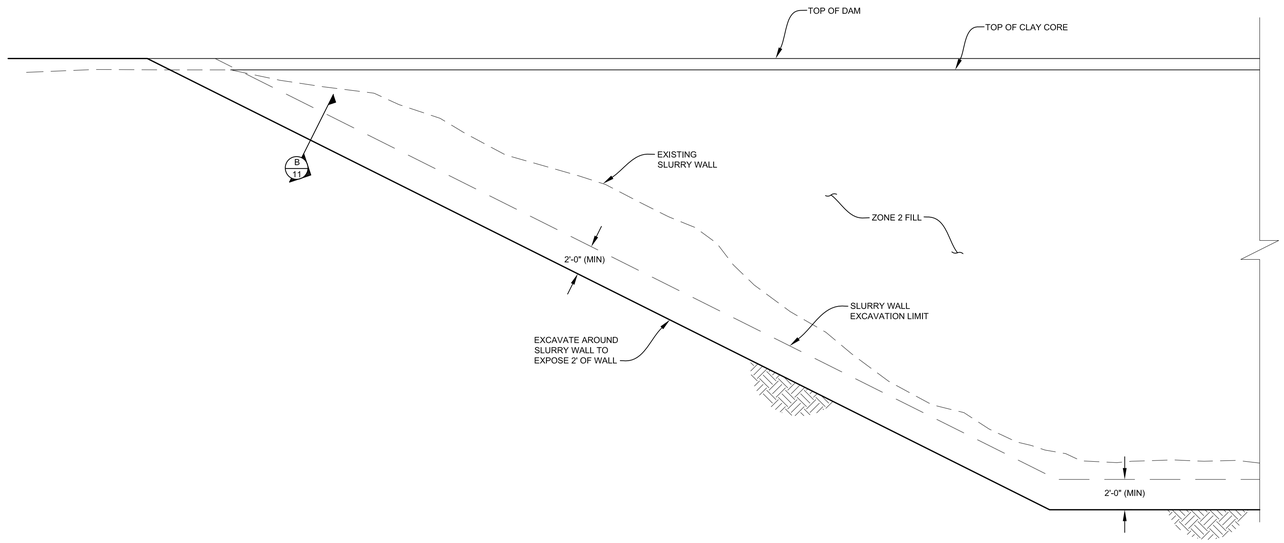

A / 7 SLURRY WALL CONNECTION PROFILE
SCALE: 1" = 5'-0"
2.5' 0 5'

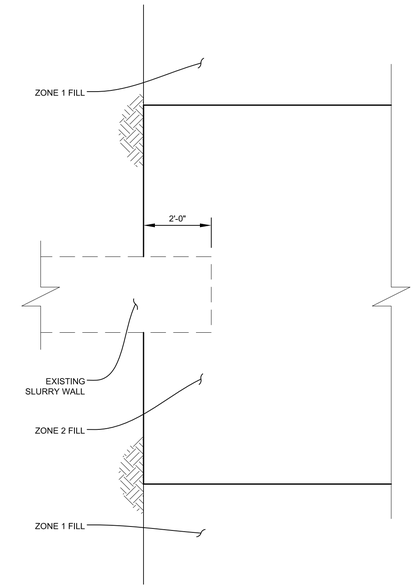

B / 11 SLURRY WALL CONNECTION DETAIL
SCALE: 1/2" = 1'-0"
1' 0 2'

NOTE:
MONITOR BEDROCK
TO PREVENT SLAKING.

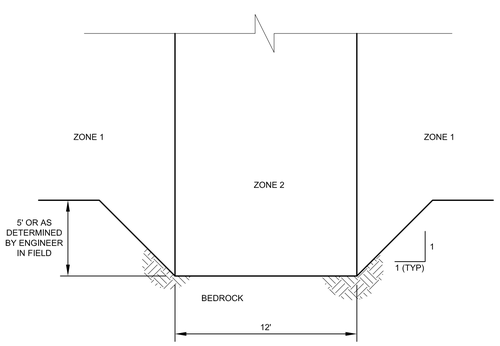

C / 7 CLAY CORE KEY-IN TO BEDROCK
SCALE: 1" = 5'-0"
2.5' 0 5'

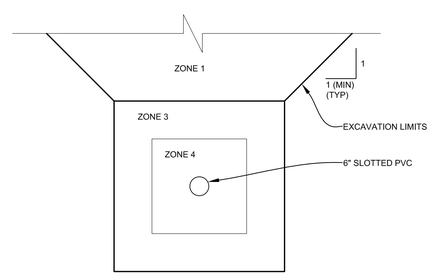

SLOTTED PIPE DETAIL
SCALE: 1/2" = 1'-0"
1' 0 2'

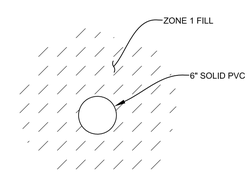

SOLID PIPE DETAIL
NOT TO SCALE

REVISIONS

Revision	Date	Description
1	7-25-2018	Boulder County Comments

Designed by:

Engineering Analytics, Inc.
1600 Specht Point Road, Suite 209
Fort Collins, CO 80525
(970) 488-3111

WESTERN MOBILE
LAKE 4 DAM
REHABILITATION

CLAY CORE
TIE IN DETAILS

Drawn by:	RDP
Designed by:	LCB
Checked by:	LCB
Scale:	As Shown
Project No.	110446
Date:	June 28, 2018

SCALE VERIFICATION:
0 1"
IF NOT ONE INCH ON THIS SHEET, ADJUST SCALE ACCORDINGLY.

SHEETS	SHEET
26	11

C-2077

T:\110446 Western Mobile 4\Boring Locations.dwg SAVED: 7/19/18 PRINTED: 7/25/18

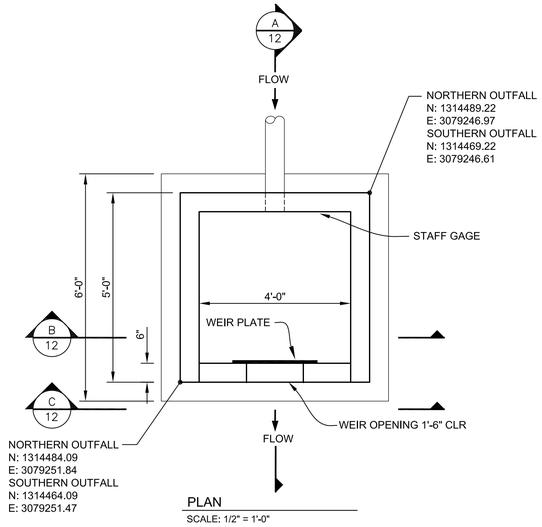

PLAN
SCALE: 1/2" = 1'-0"

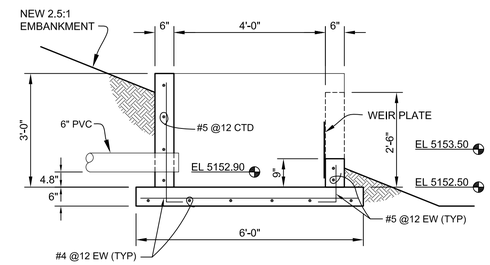

A 12 SECTION
SCALE: 1/2" = 1'-0"

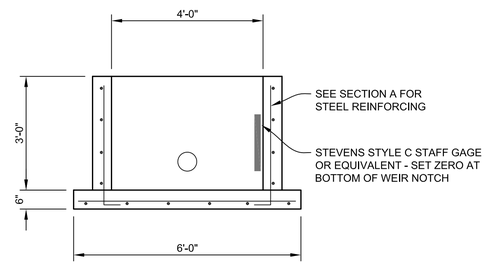

B 12 SECTION
SCALE: 1/2" = 1'-0"

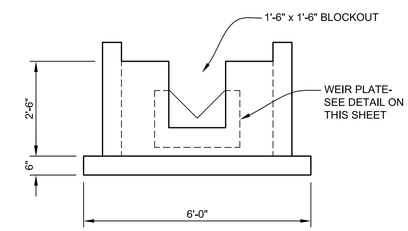

C 12 SECTION
SCALE: 1/2" = 1'-0"

MEASURING WEIR PLAN AND SECTIONS
SCALE: 1/2" = 1'-0"
1' 0 2'

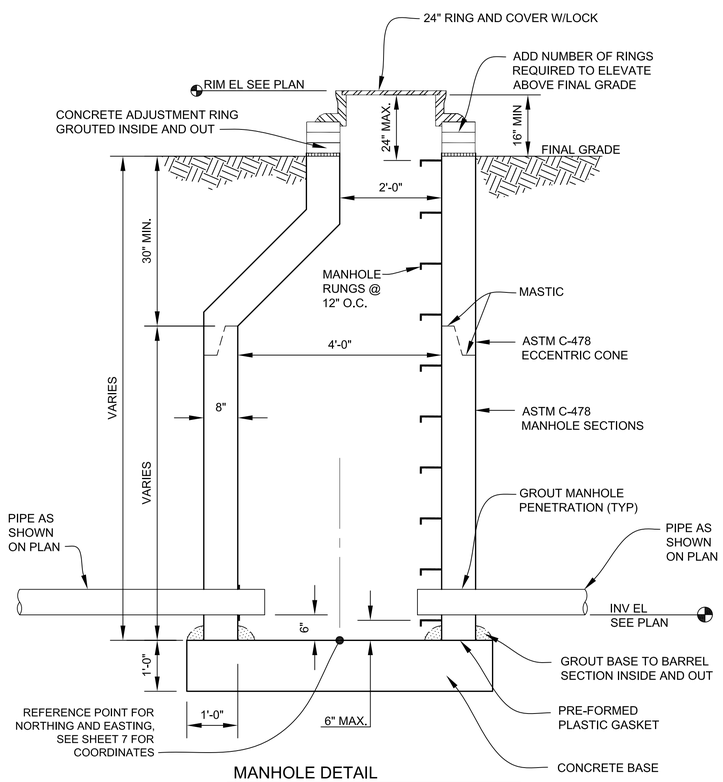

MANHOLE DETAIL
NTS

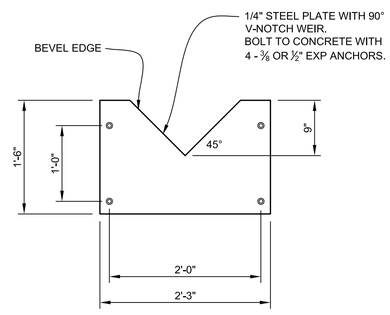

NOTE:
CAULK BETWEEN PLATE AND CONCRETE ALL AROUND.

WEIR PLATE
SCALE: 1" = 1'-0"
6" 0 1'

REVISIONS

Revision	Date	Description
1	7-25-2018	Boulder County Comments

Designed by:

Engineering Analytics, Inc.
1600 Specht Point Road, Suite 209
Fort Collins, CO 80525
(970) 488-3111

WESTERN MOBILE
LAKE 4 DAM
REHABILITATION

WEIR DETAILS AND
STANDARD DETAILS

Drawn by:	RDP
Designed by:	LCB
Checked by:	LCB
Scale:	As Shown
Project No.	110446
Date:	June 28, 2018

COLORADO REGISTERED PROFESSIONAL ENGINEER
LEE C. BLINTON
No. 40188
7-25-2018

SCALE VERIFICATION:
0 1"
IF NOT ONE INCH ON THIS SHEET, ADJUST SCALE ACCORDINGLY.

SHEETS	SHEET
26	12

C-2077

T:\110446 Western Mobile 4\Drain Details.dwg SAVED:6/28/18 PRINTED:7/25/18

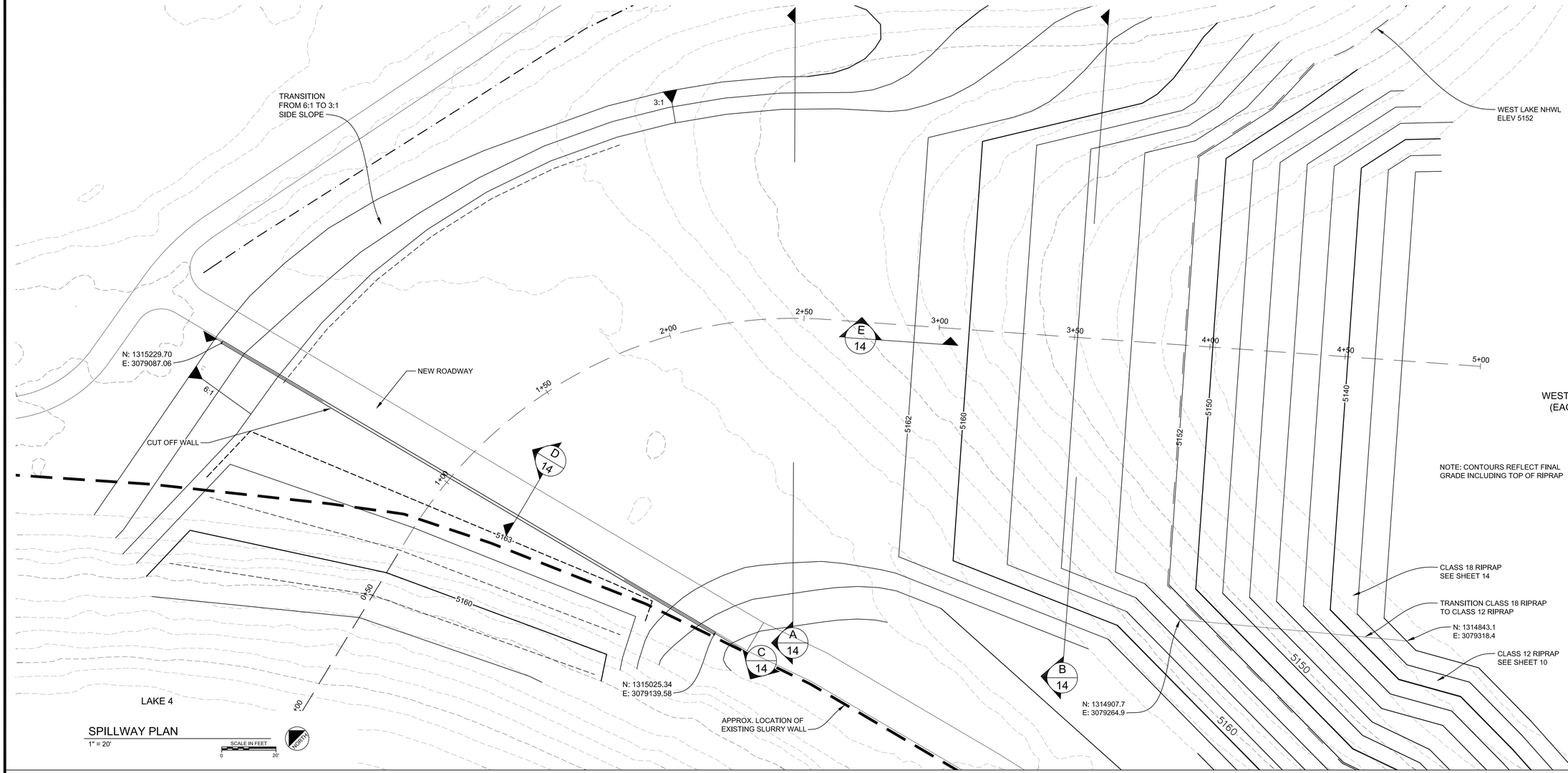

SPILLWAY PLAN

1" = 20'

SCALE IN FEET 0 20'

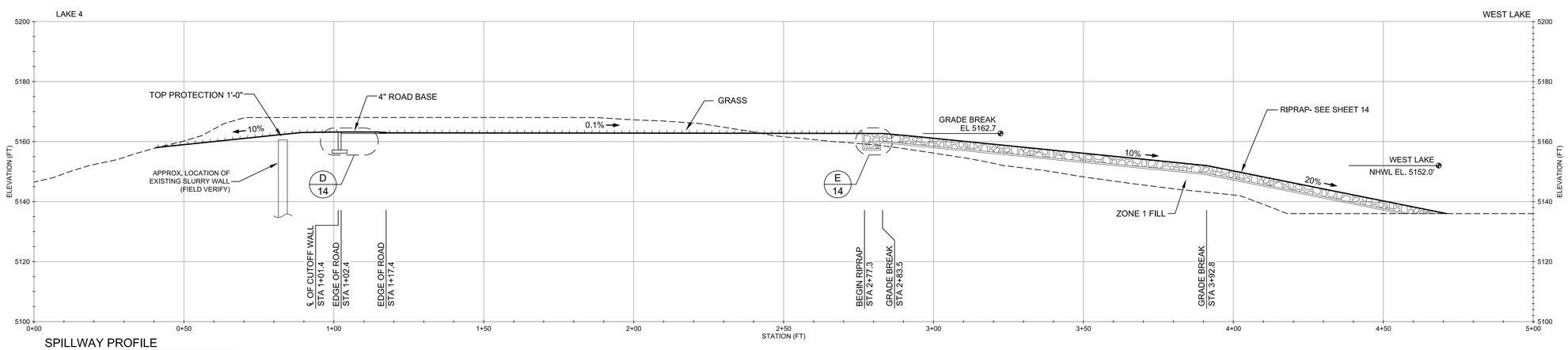

SPILLWAY PROFILE

1" = 20'

SCALE IN FEET 0 20'

T:\110446 Western Mobile A\Spillway Locations.dwg SAVED: 6/28/18 PRINTED: 7/25/18

REVISIONS

Revision	Date	Description
1	7-25-2018	Boulder County Comments

Designed by:

Engineering Analytics, Inc.
1600 Specht Point Road, Suite 209
Fort Collins, CO 80525
(970) 488-3111

WESTERN MOBILE
LAKE 4 DAM
REHABILITATION

LAKE 4 SPILLWAY
PLAN AND PROFILE

COLORADO REGISTERED
LICENSE NO. 40188
CLINTON BROWN
PROFESSIONAL ENGINEER
7-25-2018

Drawn by:	RDP
Designed by:	LCB
Checked by:	LCB
Scale:	As Shown
Project No.	110446
Date:	June 28, 2018

SCALE VERIFICATION:
0 1"
IF NOT ONE INCH ON THIS SHEET, ADJUST SCALE ACCORDINGLY.

SHEETS 26 | SHEET 13

C-2077

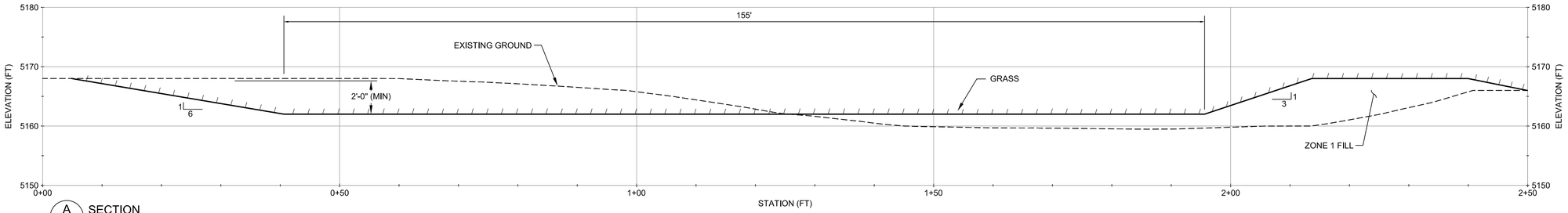

A 13 SECTION
1" = 10'
SCALE IN FEET 0 10'

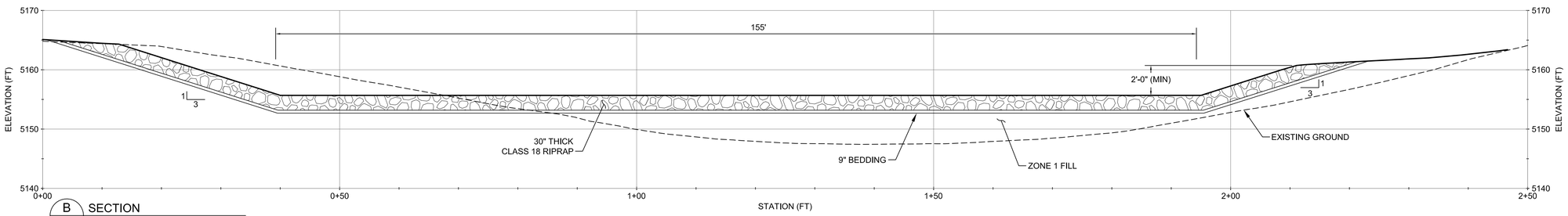

B 13 SECTION
1" = 10'
SCALE IN FEET 0 10'

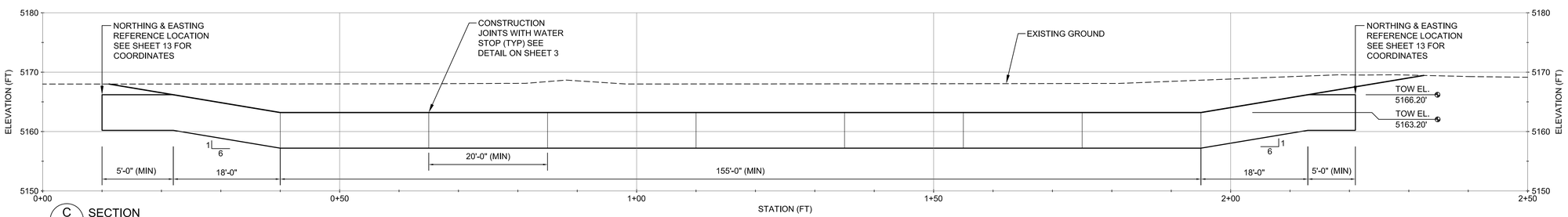

C 13 SECTION
1" = 10'
SCALE IN FEET 0 10'

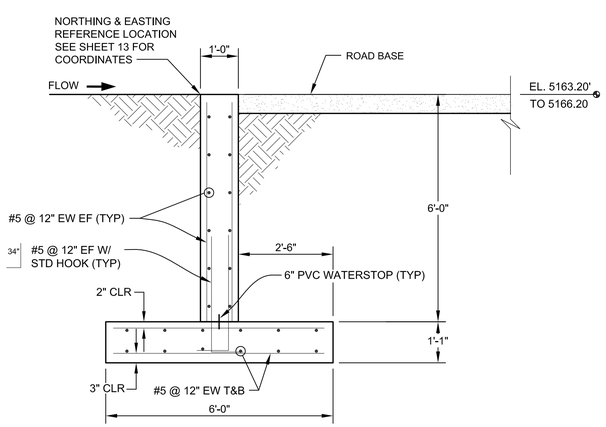

D 13 CUTOFF WALL DETAIL
1/2" = 1'-0"
SCALE IN FEET 0 2

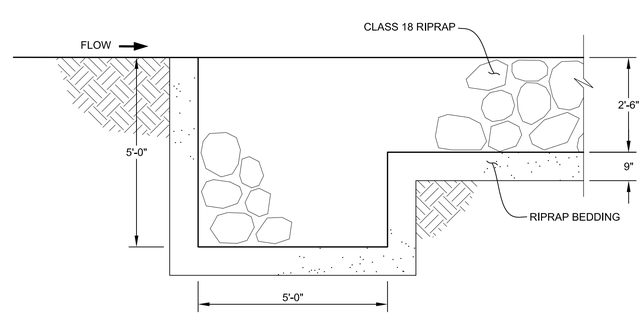

E 13 RIPRAP ANCHOR
1/2" = 1'-0"
SCALE IN FEET 0 2

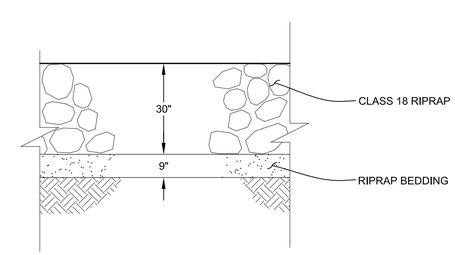

CLASS 18 RIPRAP
NOT TO SCALE

COLORADO REGISTERED
LEE CLINTON BOOTH
No. 40188
7-25-2018
PROFESSIONAL ENGINEER

REVISIONS

Revision	Date	Description
1	7-25-2018	Boulder County Comments

Designed by:

Engineering Analytics, Inc.
1600 Specht Point Road, Suite 209
Fort Collins, CO 80525
(970) 488-3111

WESTERN MOBILE
LAKE 4 DAM
REHABILITATION

LAKE 4 SPILLWAY
SECTIONS AND DETAILS

Drawn by:	RDP
Designed by:	LCB
Checked by:	LCB
Scale:	As Shown
Project No.	110446
Date:	June 28, 2018

SCALE VERIFICATION:
0 1"
IF NOT ONE INCH ON THIS SHEET, ADJUST SCALE ACCORDINGLY.

SHEETS	SHEET
26	14

C-2077

T:\110446 Western Mobile 4\Spillway Locations.dwg SAVED:6/28/18 PRINTED:7/25/18

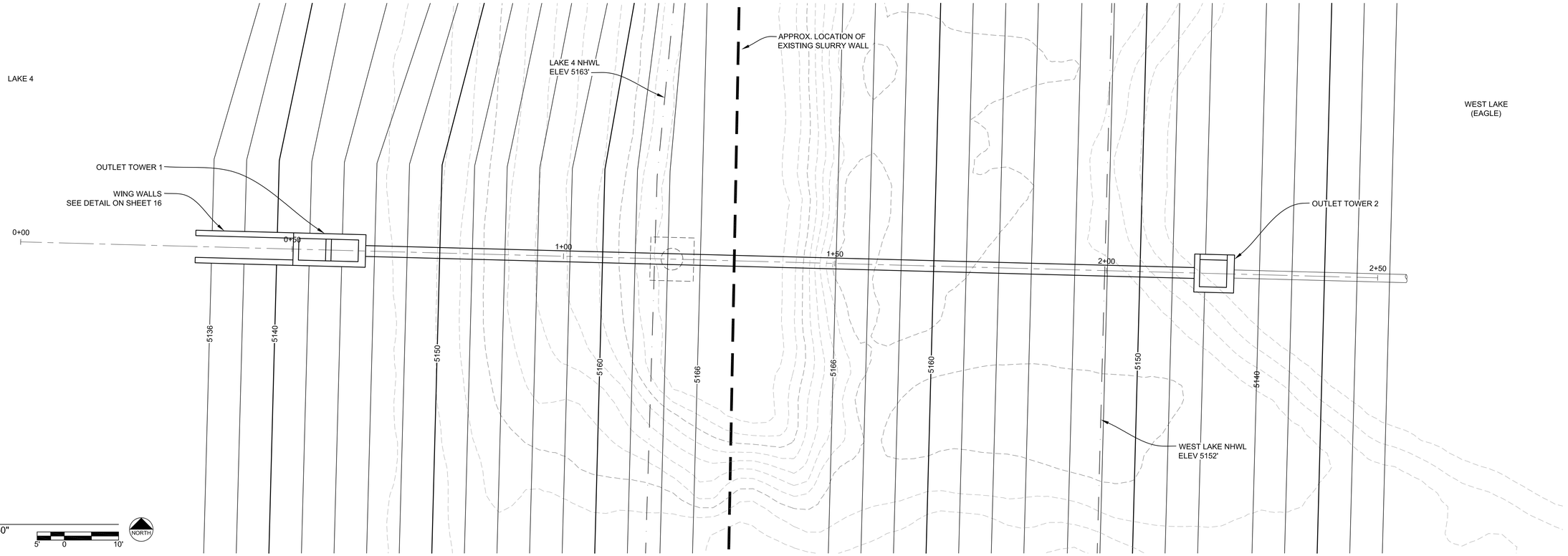

OUTLET PLAN
SCALE: 1" = 10'-0"

5' 0 10'

NORTH

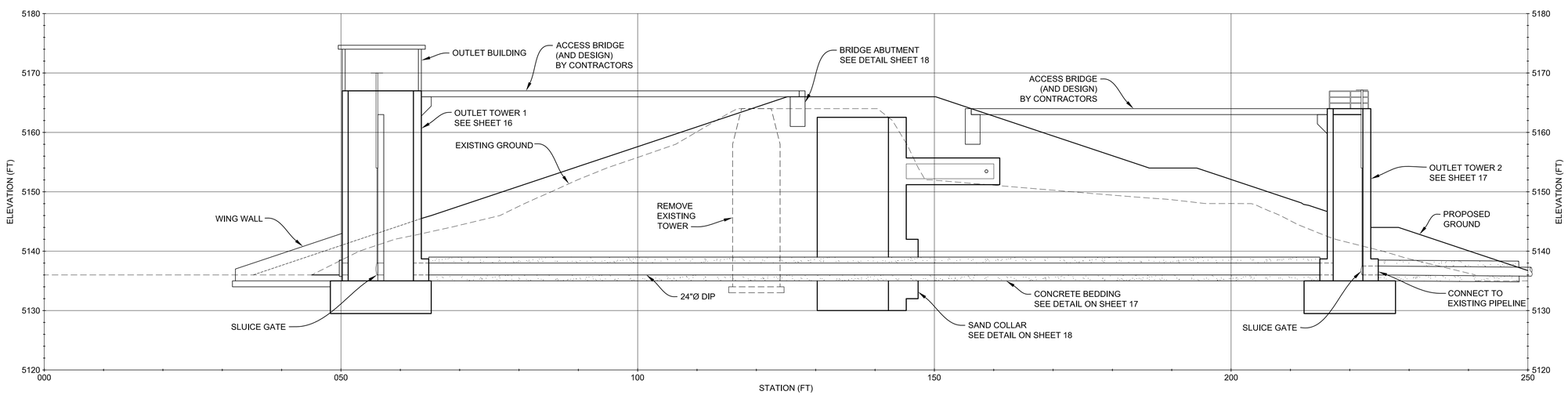

OUTLET PROFILE
SCALE: 1" = 10'-0"

5' 0 10'

T:\110446 Western Mobile 4\Tower Details.dwg SAVED:6/28/18 PRINTED:7/25/18

REVISIONS

Revision	Date	Description
1	7-25-2018	Boulder County Comments

Designed by:
Engineering Analytics, Inc.
1600 Specht Point Road, Suite 209
Fort Collins, CO 80525
(970) 488-3111

WESTERN MOBILE
LAKE 4 DAM
REHABILITATION

OUTLET STRUCTURES
PLAN AND PROFILE

Drawn by:	RDP
Designed by:	LCB
Checked by:	LCB
Scale:	As Shown
Project No.	110446
Date:	June 28, 2018

COLORADO REGISTERED
LCB
CLINTON BROWN
30188
PROFESSIONAL ENGINEER
7-25-2018

SCALE VERIFICATION:
0 1"
IF NOT ONE INCH ON THIS SHEET, ADJUST SCALE ACCORDINGLY.

SHEETS	SHEET
26	15

C-2077

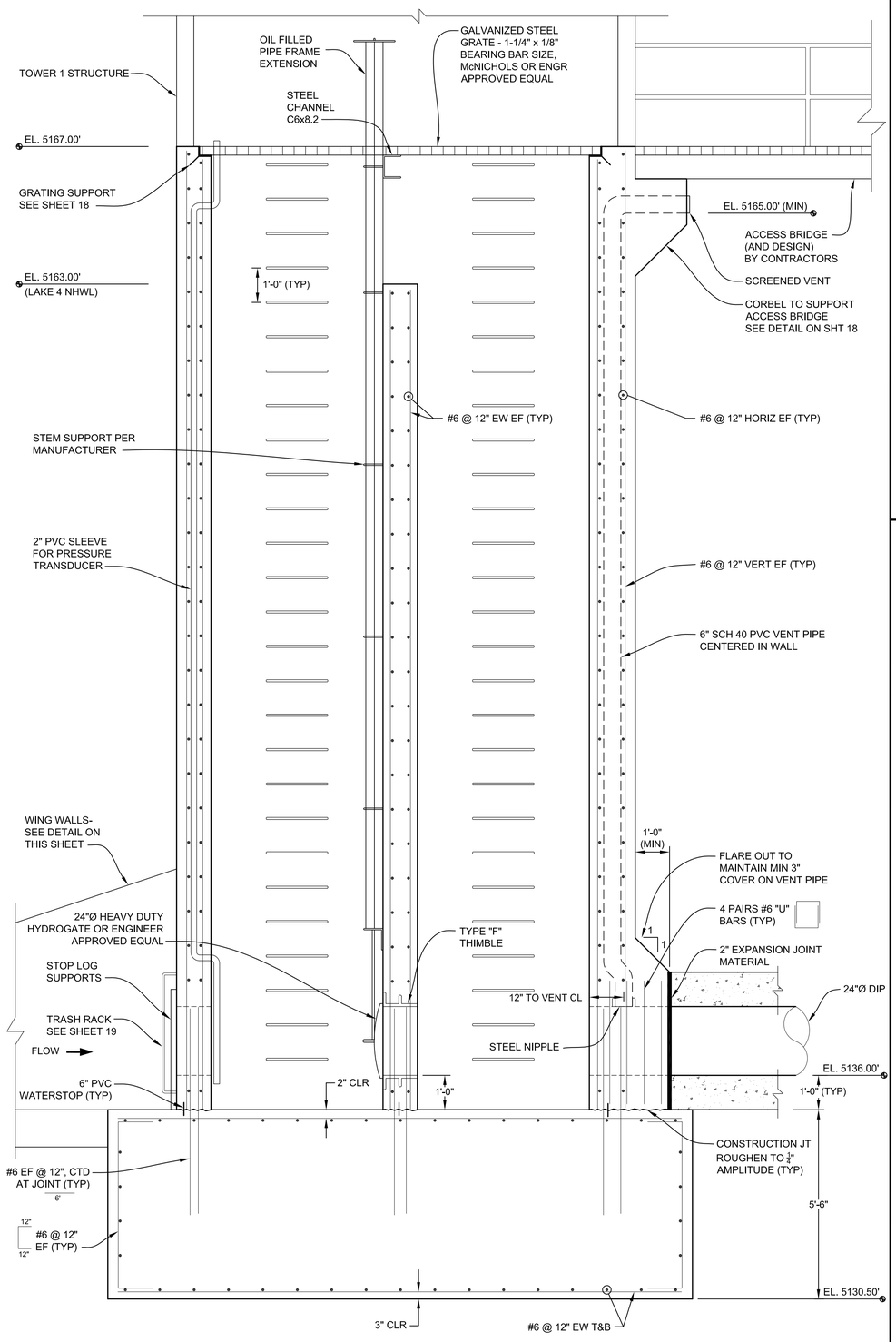

OUTLET TOWER 1 SECTION
SCALE: 1/2" = 1'-0"

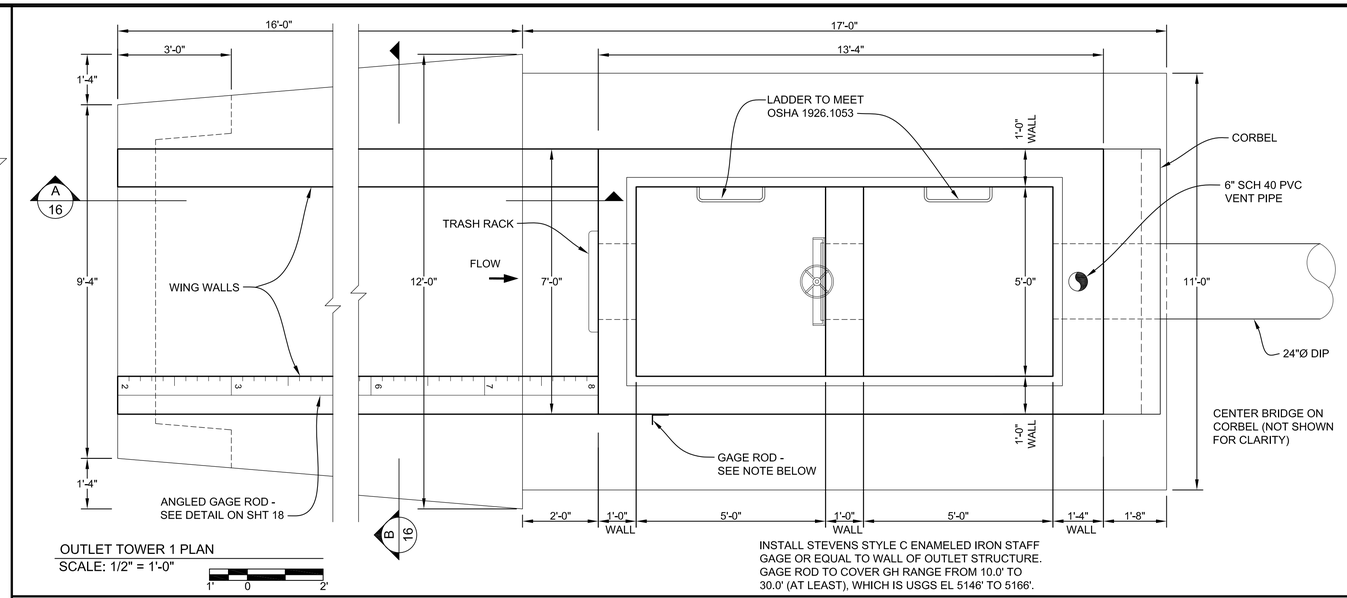

INSTALL STEVENS STYLE C ENAMELED IRON STAFF GAGE OR EQUAL TO WALL OF OUTLET STRUCTURE. GAGE ROD TO COVER GH RANGE FROM 10.0' TO 30.0' (AT LEAST), WHICH IS USGS EL 5146' TO 5166'.

OUTLET TOWER 1 PLAN
SCALE: 1/2" = 1'-0"

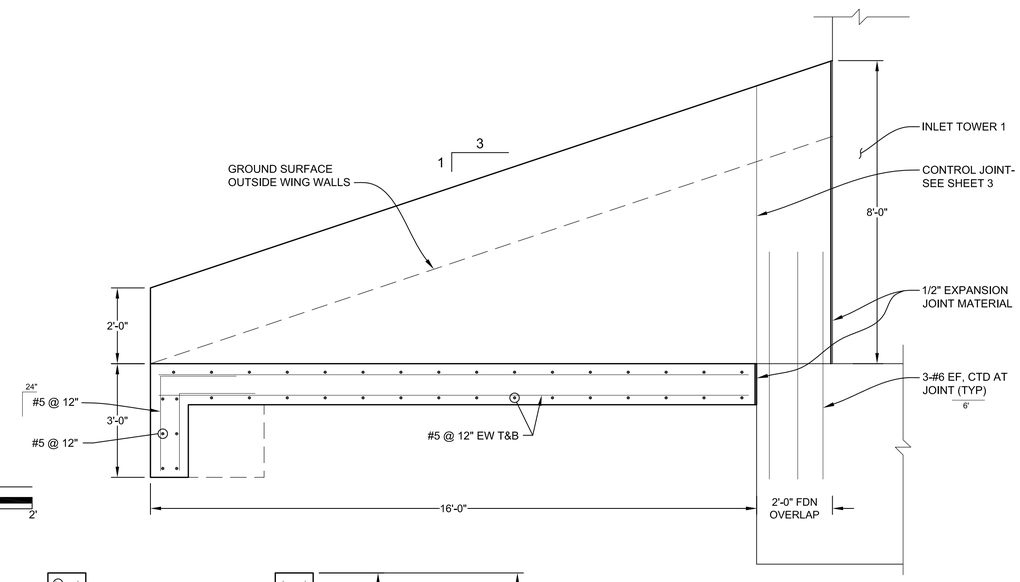

A 16 SECTION
SCALE: 1/2" = 1'-0"

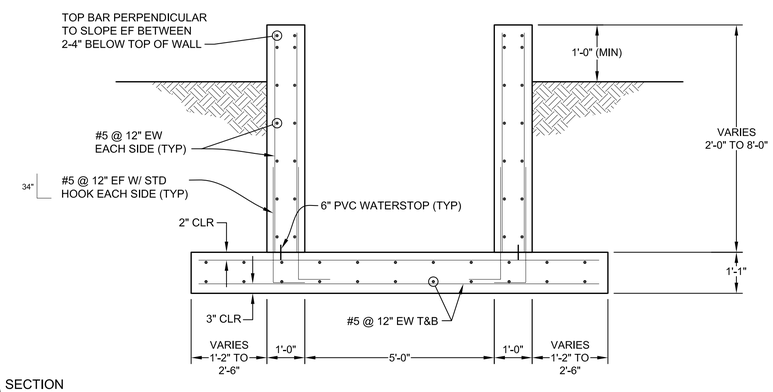

B 16 SECTION
SCALE: 1/2" = 1'-0"

Revision	Date	Description
1	7-25-2018	Boulder County Comments

REVISIONS

Designed by:

Engineering Analytics, Inc.
1600 Specht Point Road, Suite 209
Fort Collins, CO 80525
(970) 488-3111

WESTERN MOBILE
LAKE 4 DAM
REHABILITATION

OUTLET TOWER 1
STRUCTURE DETAILS

Drawn by:	RDP
Designed by:	LCB
Checked by:	LCB
Scale:	As Shown
Project No.	110446
Date:	June 28, 2018

SCALE VERIFICATION: 0 — 1"
IF NOT ONE INCH ON THIS SHEET, ADJUST SCALE ACCORDINGLY.

COLORADO REGISTERED PROFESSIONAL ENGINEER CLINTON BROWN 30188 7-25-2018

SHEETS	SHEET
26	16

C-2077

T:\110446 Western Mobile 4\Tower Details.dwg SAVED:6/28/18 PRINTED:7/25/18

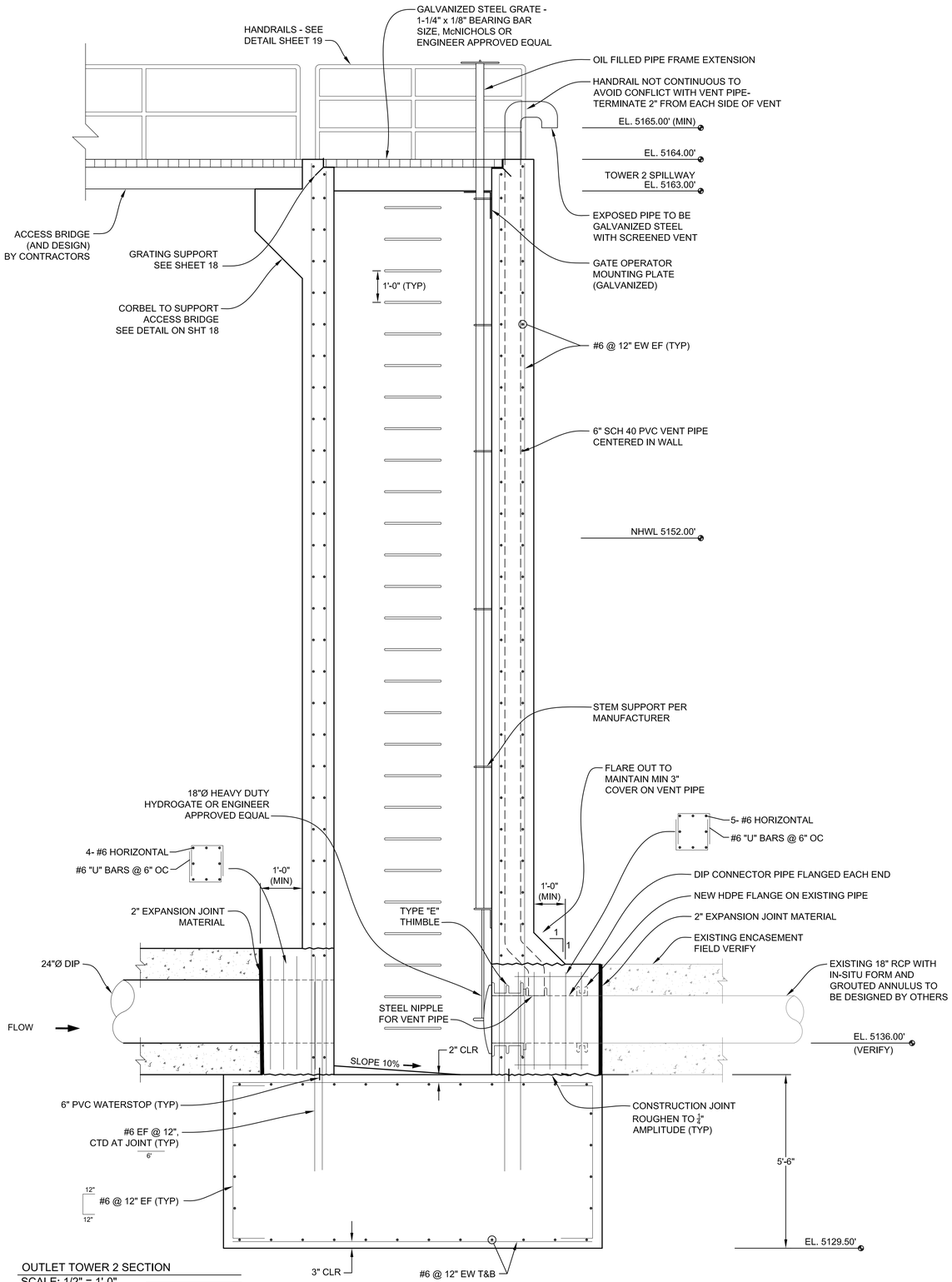

OUTLET TOWER 2 SECTION
SCALE: 1/2" = 1'-0"

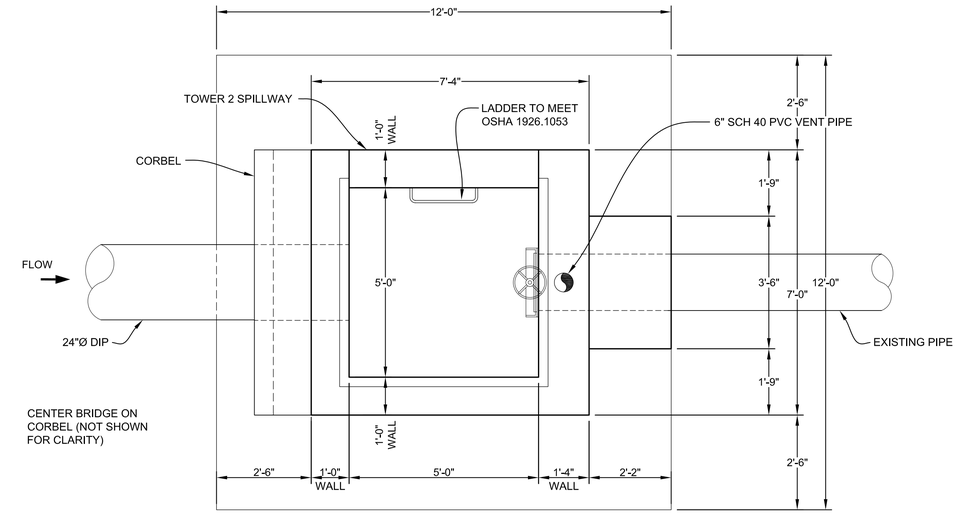

OUTLET TOWER 2 PLAN
SCALE: 1/2" = 1'-0"

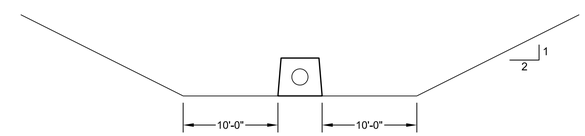

EXCAVATION DETAIL
SCALE: 1" = 10'-0"

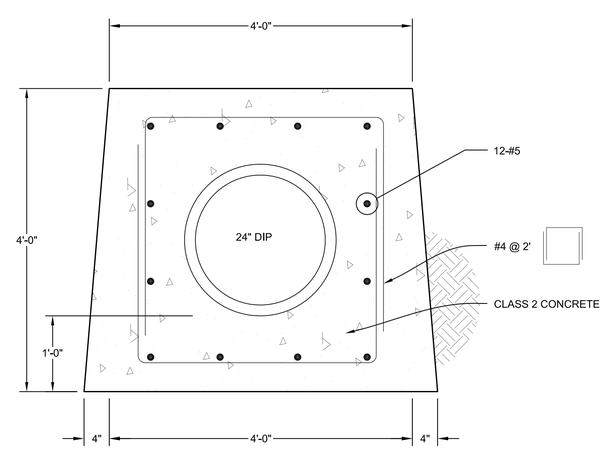

CONCRETE BEDDING DETAIL
SCALE: 1" = 1'-0"

NOTES:
1. POUR CONCRETE WITH CONSTRUCTION JOINTS EVERY 40 FEET OR LESS.
2. LONGITUDINAL REINFORCEMENT IS CONTINUOUS THROUGH CONSTRUCTION JOINT AND MAY BE SPLICED ON EITHER SIDE.
3. PREPARE FOUNDATION ACCORDING TO CONSTRUCTION SPECIFICATIONS.

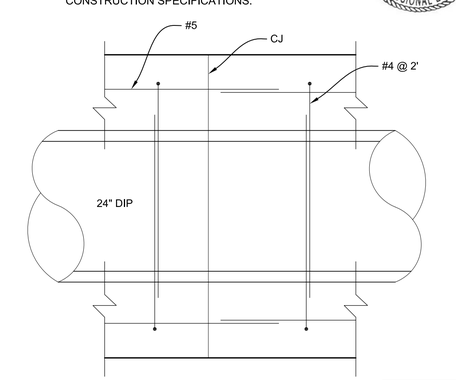

CONSTRUCTION JOINT DETAIL
SCALE: 1" = 1'-0"

REVISIONS

Revision	Date	Description
1	7-25-2018	Boulder County Comments

Designed by:

Engineering Analytics, Inc.
1600 Specht Point Road, Suite 209
Fort Collins, CO 80525
(970) 488-3111

WESTERN MOBILE LAKE 4 DAM REHABILITATION

OUTLET TOWER 2 STRUCTURE DETAILS

Drawn by:	RDP
Designed by:	LCB
Checked by:	LCB
Scale:	As Shown
Project No.	110446
Date:	June 28, 2018

SCALE VERIFICATION: 0 — 1"
IF NOT ONE INCH ON THIS SHEET, ADJUST SCALE ACCORDINGLY.

SHEETS 26 | SHEET 17

C-2077

T:\110446 Western Mobile 4\Tower Details.dwg SAVED:6/28/18 PRINTED:7/25/18

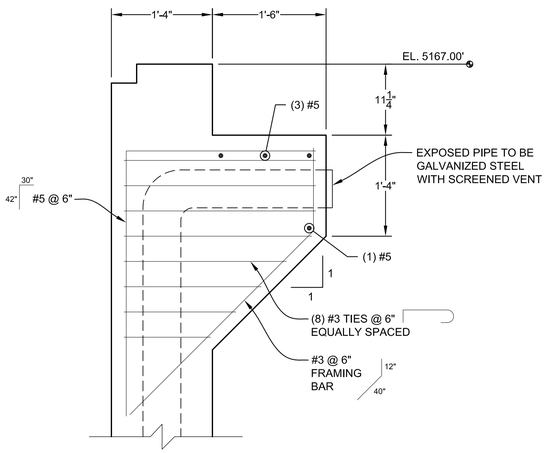

TOWER 1 CORBEL
SCALE: 1" = 1'-0"

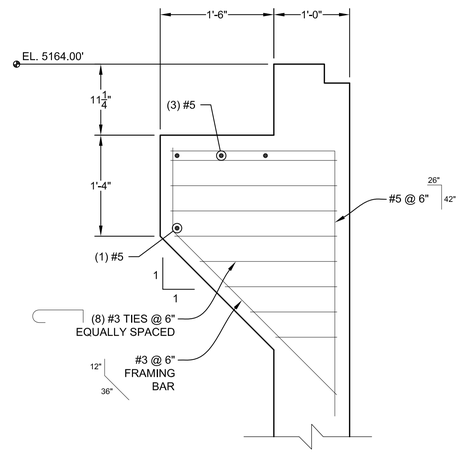

TOWER 2 CORBEL
SCALE: 1" = 1'-0"

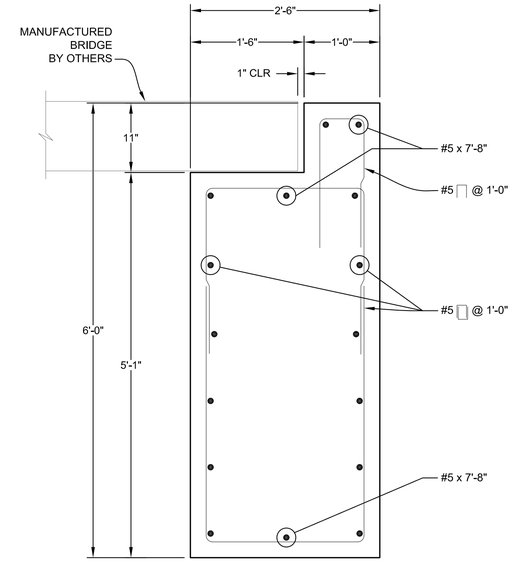

BRIDGE ABUTMENT
SCALE: 1" = 1'-0"

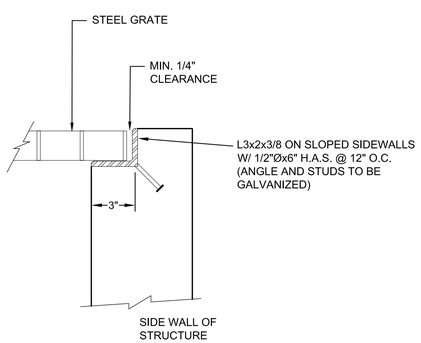

NOTE:
1. BAR GRATING TO BE 1-1/2"x1/8" HD GALV. STEEL GW-125 BY McNICHOLS OR EQUAL. ANCHOR WITH 5/8" BOLTS AND CLIPS AT CORNERS.

GRATE SUPPORT DETAIL
NOT TO SCALE

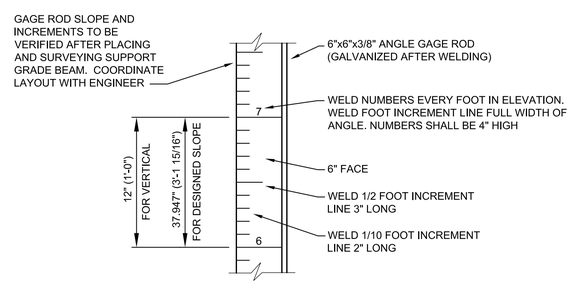

ANGLED GAGE ROD DETAIL
NOT TO SCALE

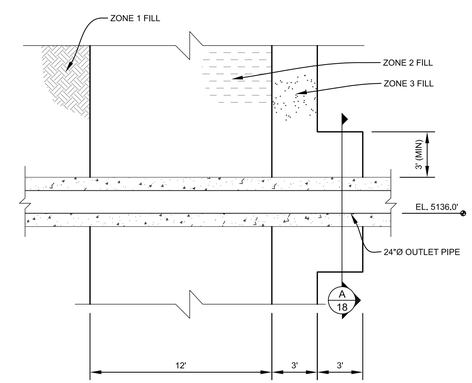

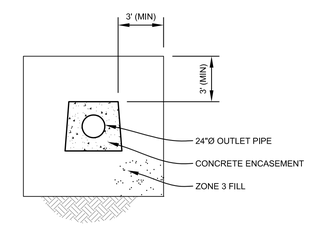

A 18 SECTION
SCALE: 1" = 5'-0"

SAND COLLAR DETAIL
SCALE: 1" = 5'-0"

REVISIONS

Revision	Date	Description
1	7-25-2018	Boulder County Comments

Designed by:

Engineering Analytics, Inc.
1600 Specht Point Road, Suite 209
Fort Collins, CO 80525
(970) 488-3111

WESTERN MOBILE LAKE 4 DAM REHABILITATION

TOWER DETAILS

Drawn by:	RDP
Designed by:	LCB
Checked by:	LCB
Scale:	As Shown
Project No.	110446
Date:	June 28, 2018

SCALE VERIFICATION: 0 — 1"
IF NOT ONE INCH ON THIS SHEET, ADJUST SCALE ACCORDINGLY.

COLORADO REGISTERED PROFESSIONAL ENGINEER
LEE CLINTON BOLT
No. 40189
7-25-2018

SHEETS 26 | SHEET 18

C-2077

T:\110446 Western Mobile 4\Tower Details.dwg SAVED:6/28/18 PRINTED:7/25/18

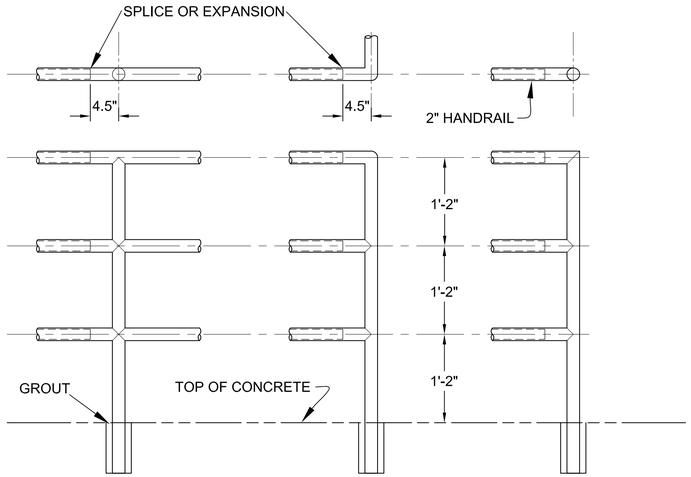

INTERMEDIATE POST CORNER POST END POST

NOTES

1. WELDING SYMBOLS APPLY TO JOINTS OF ALL MEMBERS OF SIMILAR IDENTIFICATION.
2. WELD ALL PIPE JOINTS WITH 1/8" REINFORCED WELDS AND DRESS SMOOTH.
3. ALL HANDRAILS ARE TO BE FABRICATED FROM 2" STANDARD WEIGH BLACK PIPE.
4. PROVIDE EXPANSION JOINT IN HANDRAIL OVER ALL EXPANSION AND CONTRACTION JOINTS IN CONCRETE.
5. CORNERS AND EDGES SHALL BE FREE OF BURRS.

STANDARD HANDRAIL DETAILS

NTS

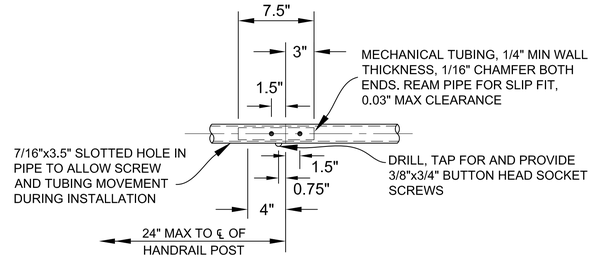

FIXED SPLICE IN CONTINUOUS RUN OF HANDRAIL

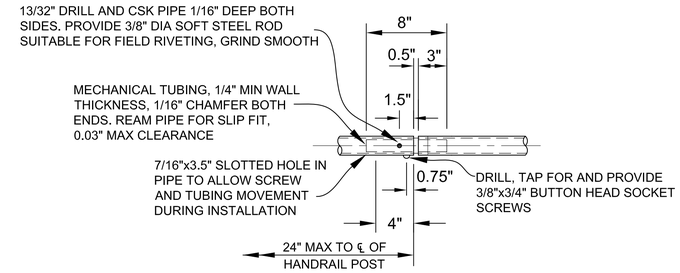

EXPANSION JOINT IN CONTINUOUS RUN OF HANDRAIL

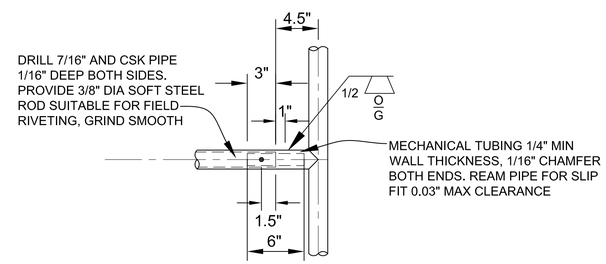

SPLICE FOR FIXED HANDRAIL

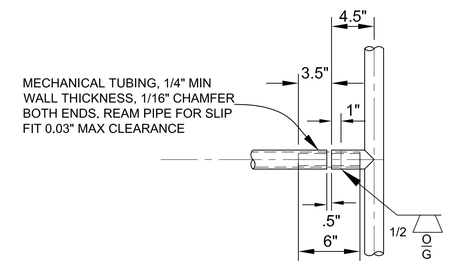

SPLICE FOR EXPANSION JOINT

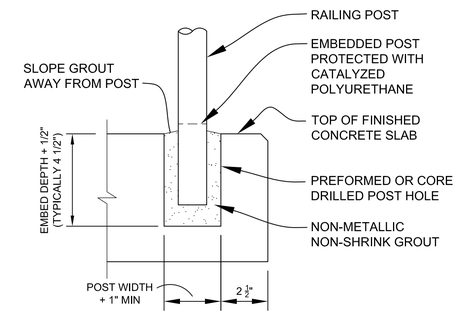

RAIL EMBEDMENT

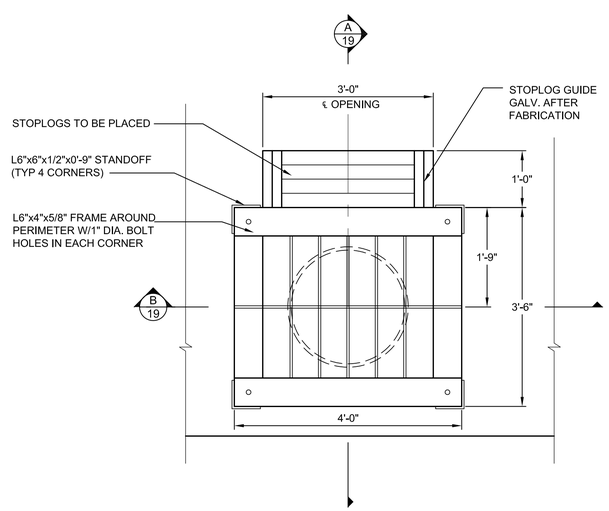

NOTE:
USE 3"x1/2" BAR STOCK @ 6" OC FOR TRASHRACK ALL PARTS GALVANIZED AFTER FABRICATION. BOLT RACK TO HEADWALL WITH 4-3/4"Ø SS EPOXY ANCHORS EMBEDED 6" MIN. INTO CONCRETE

TRASH RACK AND STOP LOG DETAIL
SCALE: 3/4" = 1'-0"

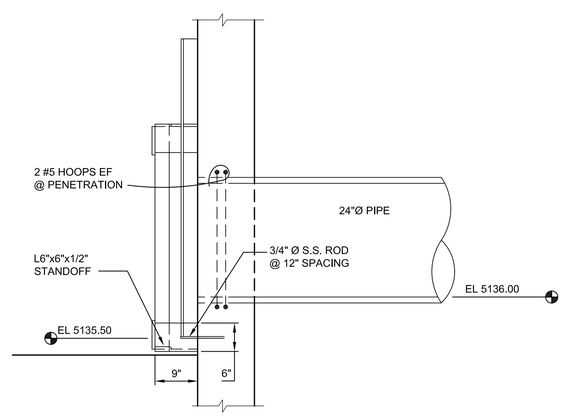

A 19 SECTION
SCALE: 3/4" = 1'-0"

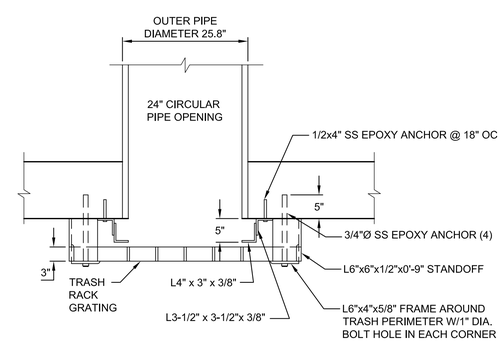

B 19 SECTION
SCALE: 3/4" = 1'-0"

REVISIONS		
Revision	Date	Description
1	7-25-2018	Boulder County Comments

Designed by:

Engineering Analytics, Inc.
1600 Specht Point Road, Suite 209
Fort Collins, CO 80525
(970) 488-3111

WESTERN MOBILE LAKE 4 DAM REHABILITATION

HANDRAIL AND TRASH RACK DETAILS

COLORADO REGISTERED LEE CLINTON BOLT 40138 PROFESSIONAL ENGINEER 7-25-2018

Drawn by:	RDP
Designed by:	LCB
Checked by:	LCB
Scale:	As Shown
Project No.	110446
Date:	June 28, 2018

SCALE VERIFICATION: 0 — 1" IF NOT ONE INCH ON THIS SHEET, ADJUST SCALE ACCORDINGLY.

SHEETS 26 SHEET 19

C-2077

T:\110446 Western Mobile A\bondrp\ Details.dwg SAVED: 7/17/18 PRINTED: 7/25/18

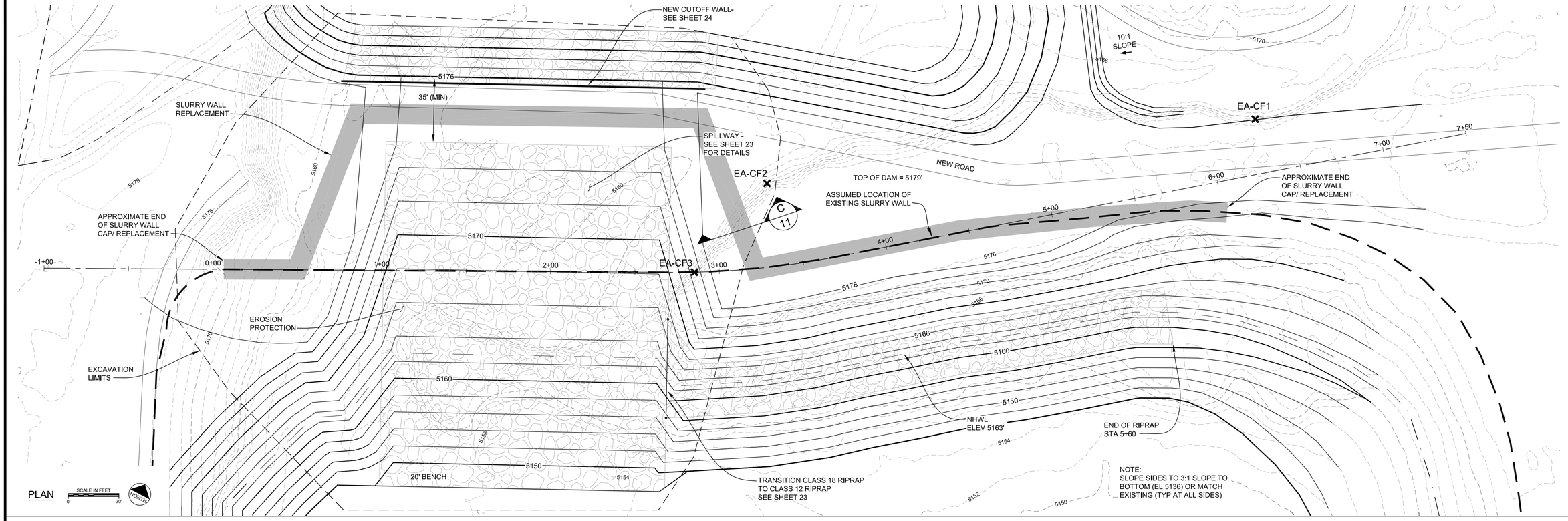

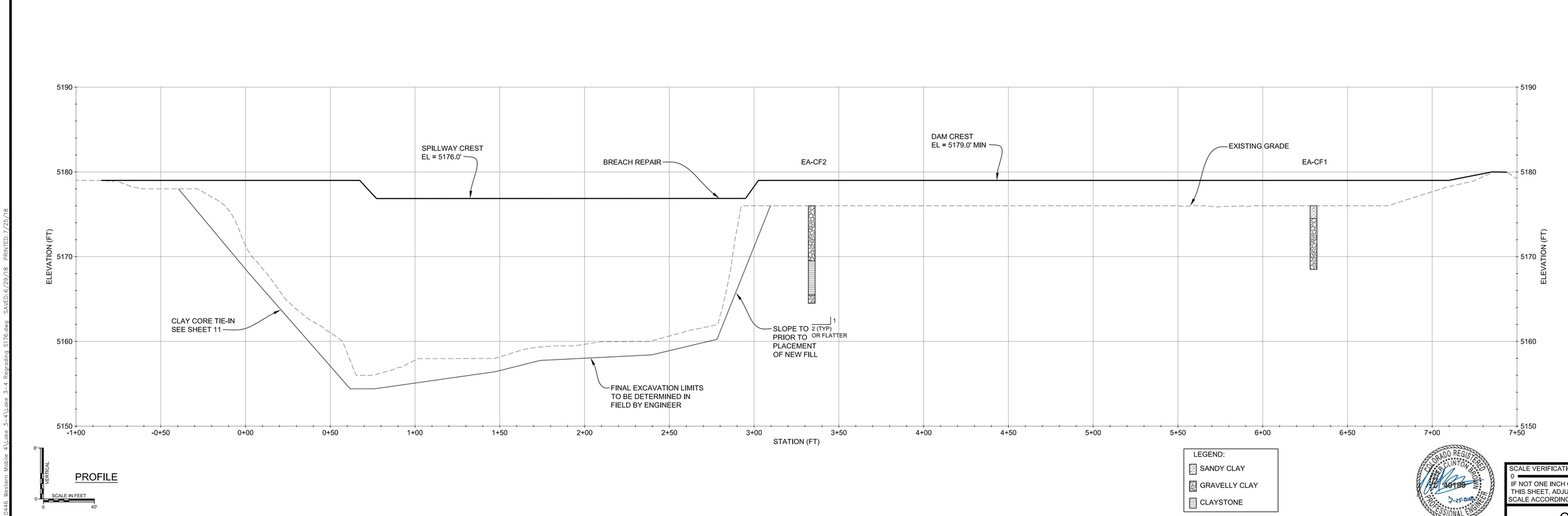

REVISIONS

Revision	Date	Description
1	7-25-2018	Boulder County Comments

Designed by:

Engineering Analytics, Inc.
1600 Specht Point Road, Suite 209
Fort Collins, CO 80525
(970) 488-3111

WESTERN MOBILE
LAKE 4 DAM
REHABILITATION

LAKE 3 EMBANKMENT
PLAN AND PROFILE

Drawn by:	RDP
Designed by:	LCB
Checked by:	LCB
Scale:	As Shown
Project No.	110446
Date:	June 28, 2018

SCALE VERIFICATION:
0 1"
IF NOT ONE INCH ON THIS SHEET, ADJUST SCALE ACCORDINGLY.

SHEETS 26 | SHEET 20

C-2077

T:\110446 Western Mobile 4\Lake 3-4\Lake 3-4 Regrading 5176.dwg SAVED: 6/29/18 PRINTED: 7/25/18

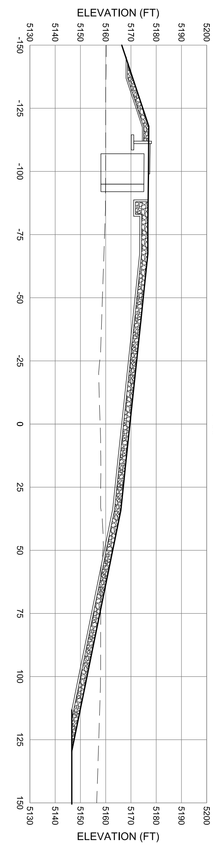

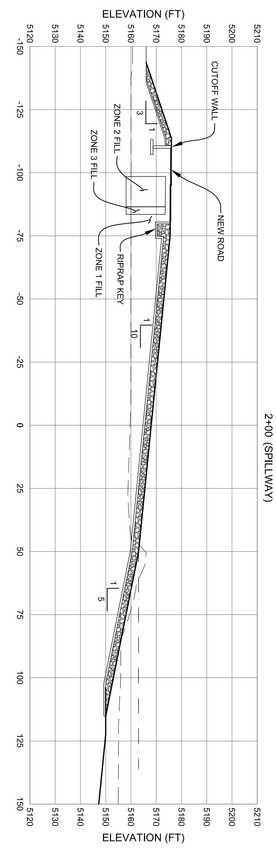

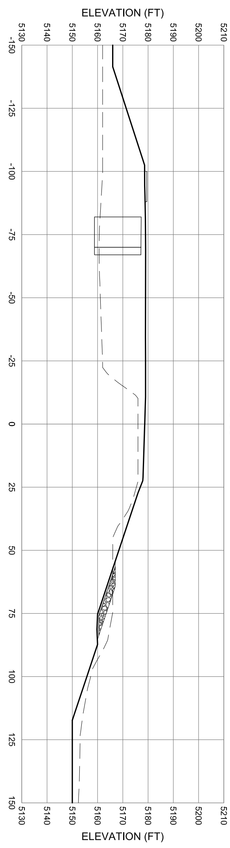

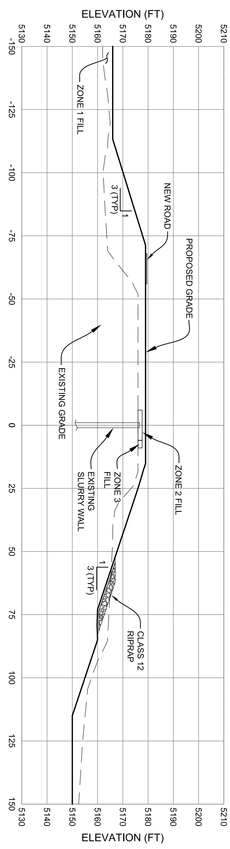

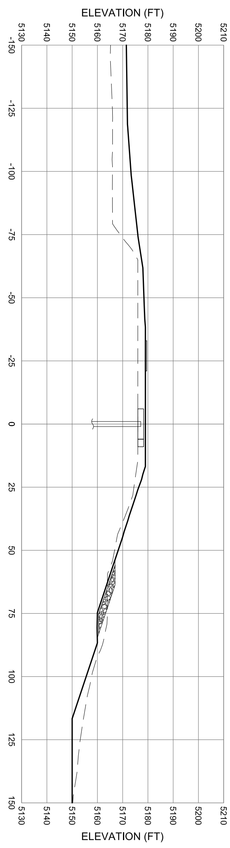

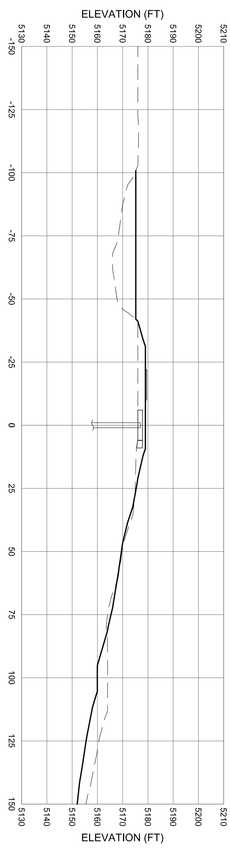

COLORADO REGISTERED PROFESSIONAL ENGINEER
LAURA C. BROWN
PE-44188
7-25-2018
PROFESSIONAL ENGINEER

SCALE IN FEET
0 40

SCALE VERIFICATION:
0 1"
IF NOT ONE INCH ON THIS SHEET, ADJUST SCALE ACCORDINGLY

C-2077

Drawn By:	RBP
Designed By:	LCB
Checked By:	LCB
Scale:	As Shown
Project No.	110446
Date:	June 28, 2018
SHEETS	26
SHEET	21

LAKE 3 EMBANKMENT CROSS-SECTIONS

WESTERN MOBILE
LAKE 4 DAM
REHABILITATION

Designed by:

Engineering Analytics, Inc.
1600 Specht Point Road, Suite 209
Fort Collins, CO 80525
(970) 488-3111

REVISIONS

Revision	Date	Description
1	7-25-2018	Boulder County Comments

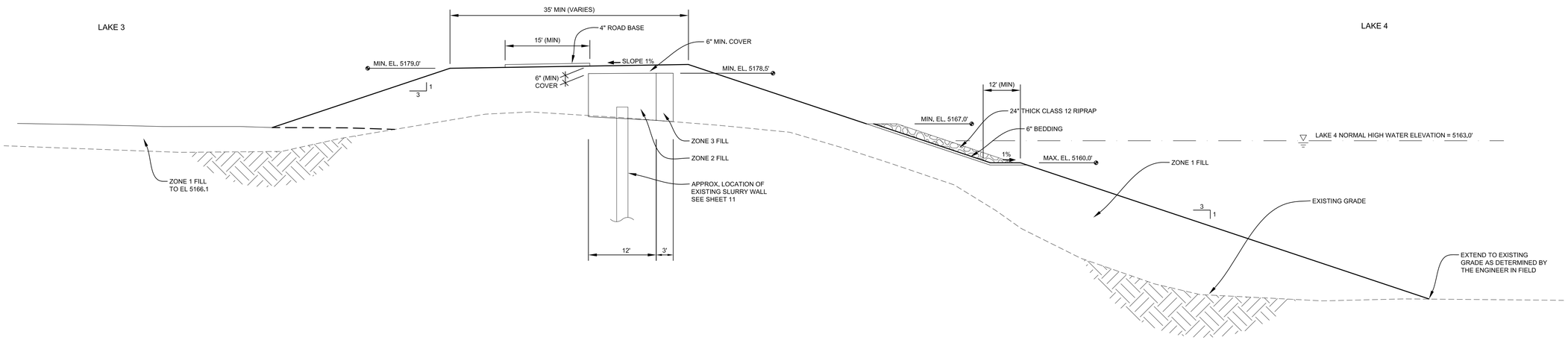

TYPICAL CROSS-SECTION
OUTSIDE OF STA 0+50 TO 3+25
1" = 10'

SCALE IN FEET
0 10'

SEE SECTION A/23
FOR CROSS SECTION
AT STA 0+50 TO 3+25

REVISIONS

Revision	Date	Description
1	7-25-2018	Boulder County Comments

Designed by:

Engineering Analytics, Inc.
1600 Specht Point Road, Suite 209
Fort Collins, CO 80525
(970) 488-3111

WESTERN MOBILE
LAKE 4 DAM
REHABILITATION

LAKE 3 EMBANKMENT
TYPICAL CROSS-SECTION

Drawn by:	RDP
Designed by:	LCB
Checked by:	LCB
Scale:	As Shown
Project No.	110446
Date:	June 28, 2018

COLORADO REGISTERED PROFESSIONAL ENGINEER
CLINTON BROWN
40189
7-25-2018

SCALE VERIFICATION:
0 1"
IF NOT ONE INCH ON THIS SHEET, ADJUST SCALE ACCORDINGLY.

SHEETS 26 | SHEET 22

C-2077

T:\110446 Western Mobile 4\Lake 3-4\Lake 3-4 Regrading 5176.dwg SAVED: 6/29/18 PRINTED: 7/25/18

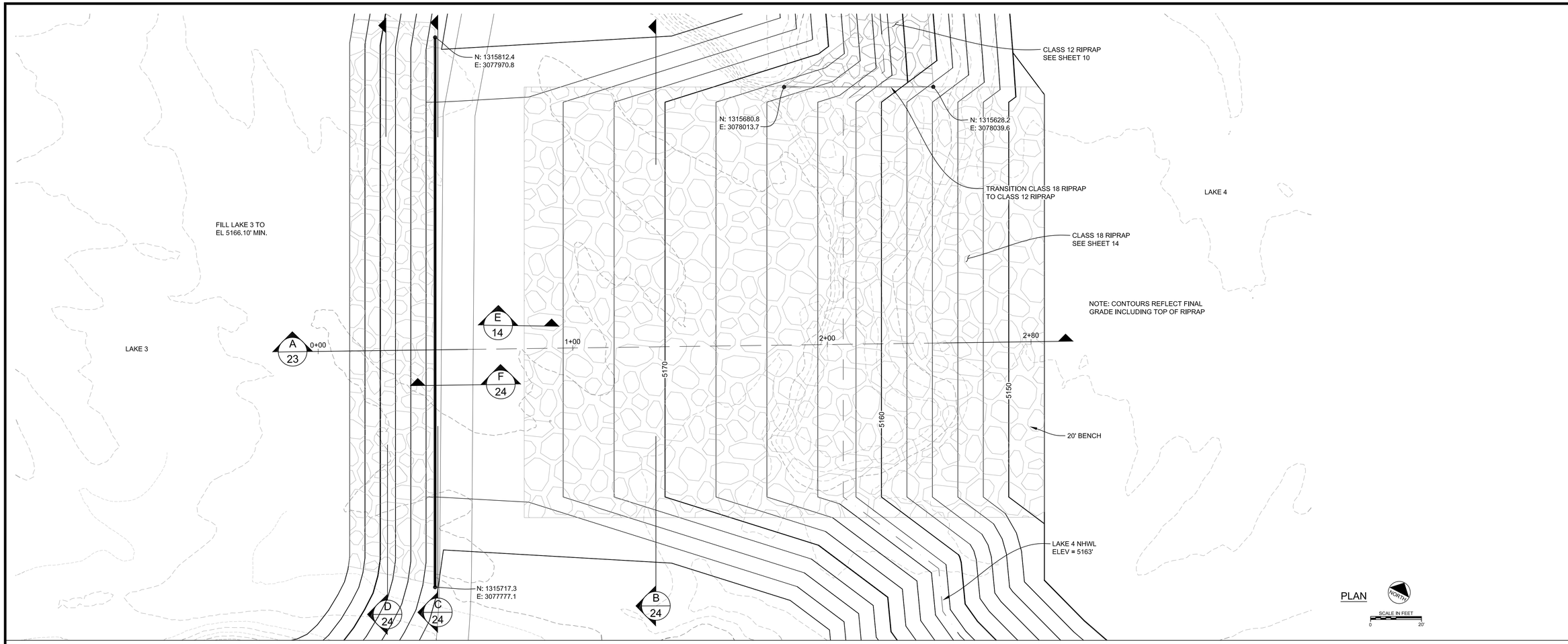

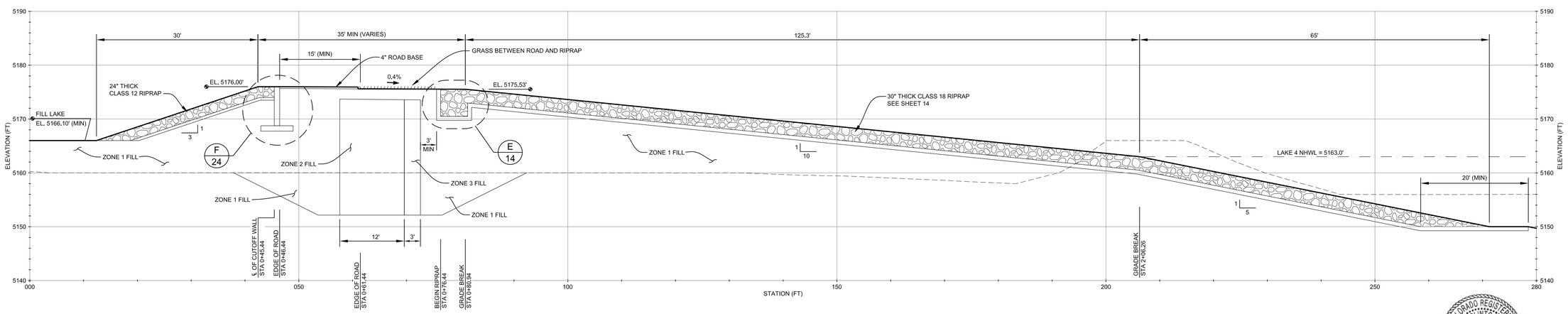

NOTES:
CLAY CORE SHALL BE EMBEDDED 5' MIN. INTO BEDROCK.

FINAL EXTENT AND DEPTH SHALL BE DETERMINED IN FIELD BY PROJECT ENGINEER.

A
23
LAKE 3 SPILLWAY PROFILE
1" = 10'
SCALE IN FEET
0
10'

REVISIONS

Revision	Date	Description
1	7-25-2018	Boulder County Comments

Designed by:

Engineering Analytics, Inc.
1600 Specht Point Road, Suite 209
Fort Collins, CO 80525
(970) 488-3111

WESTERN MOBILE
LAKE 4 DAM
REHABILITATION

LAKE 3 EMBANKMENT
SPILLWAY PLAN AND
CROSS-SECTION

Drawn by:	RDP
Designed by:	LCB
Checked by:	LCB
Scale:	As Shown
Project No.	110446
Date:	June 28, 2018

COLORADO REGISTERED PROFESSIONAL ENGINEER
CLINTON BROWN
40189
7-25-2018

SCALE VERIFICATION:
0 1"
IF NOT ONE INCH ON THIS SHEET, ADJUST SCALE ACCORDINGLY.

SHEETS 26
SHEET 23

C-2077

T:\110446 Western Mobile 4\Lake 3-4\Lake 3-4 Regrading 5176.dwg SAVED: 6/29/18 PRINTED: 7/25/18

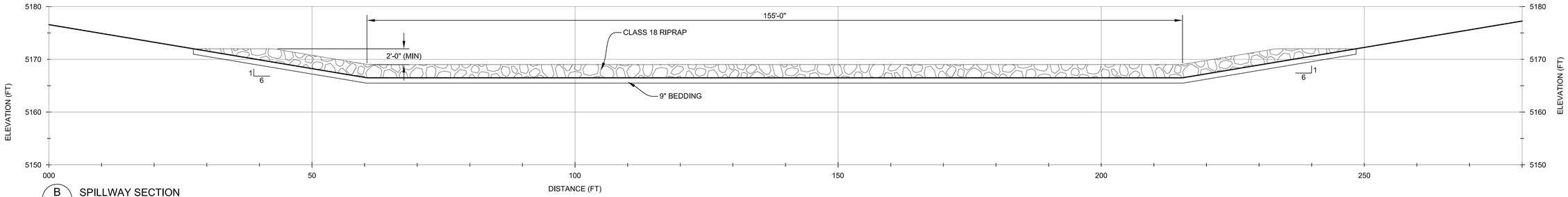

B / 23 SPILLWAY SECTION
1" = 10'
SCALE IN FEET 0 10'

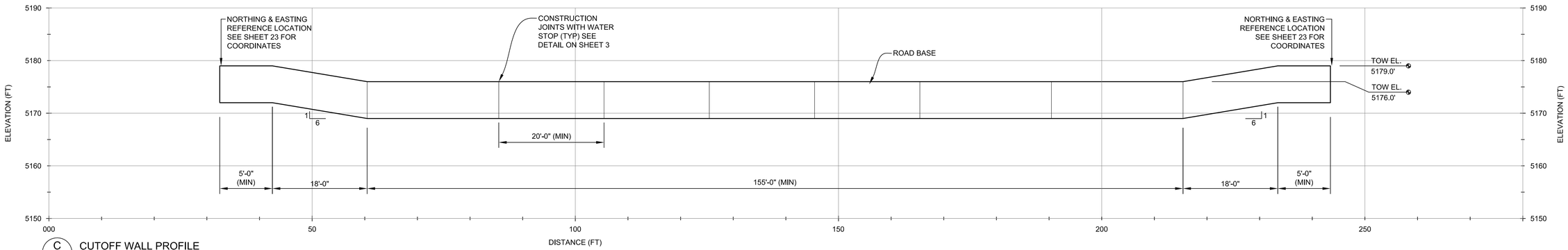

C / 23 CUTOFF WALL PROFILE
1" = 10'
SCALE IN FEET 0 10'

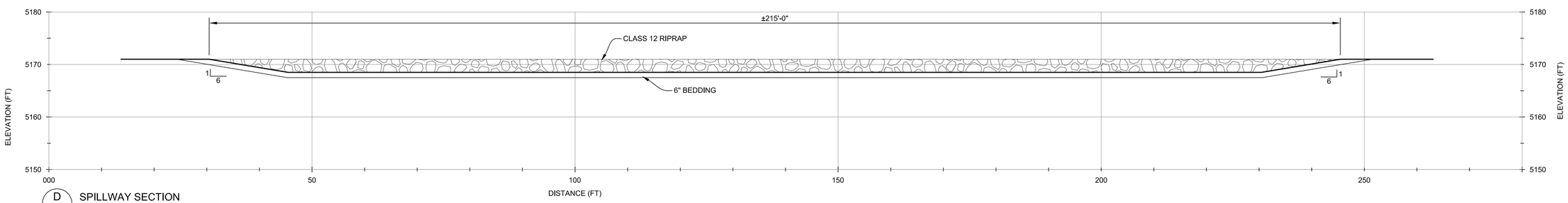

D / 23 SPILLWAY SECTION
1" = 10'
SCALE IN FEET 0 10'

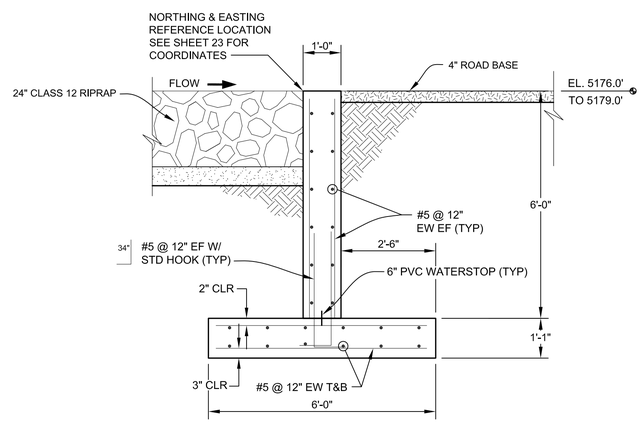

F / 23 CUTOFF WALL DETAIL
1" = 2'
SCALE IN FEET 0 2'

REVISIONS

Revision	Date	Description
1	7-25-2018	Boulder County Comments

Designed by:
Engineering Analytics, Inc.
1600 Specht Point Road, Suite 209
Fort Collins, CO 80525
(970) 488-3111

WESTERN MOBILE
LAKE 4 DAM
REHABILITATION

LAKE 3 EMBANKMENT
SPILLWAY SECTIONS

Drawn by:	RDP
Designed by:	LCB
Checked by:	LCB
Scale:	As Shown
Project No.	110446
Date:	June 28, 2018
SHEETS	26
SHEET	24

COLORADO REGISTERED LEE CLINTON BOOZ No. 40188 PROFESSIONAL ENGINEER 7-25-2018

SCALE VERIFICATION: 0 1"
IF NOT ONE INCH ON THIS SHEET, ADJUST SCALE ACCORDINGLY.

C-2077

T:\110446 Western Mobile 4\Lake 3-4\Lake 3-4 Regrading 5176.dwg SAVED:6/29/18 PRINTED:7/25/18

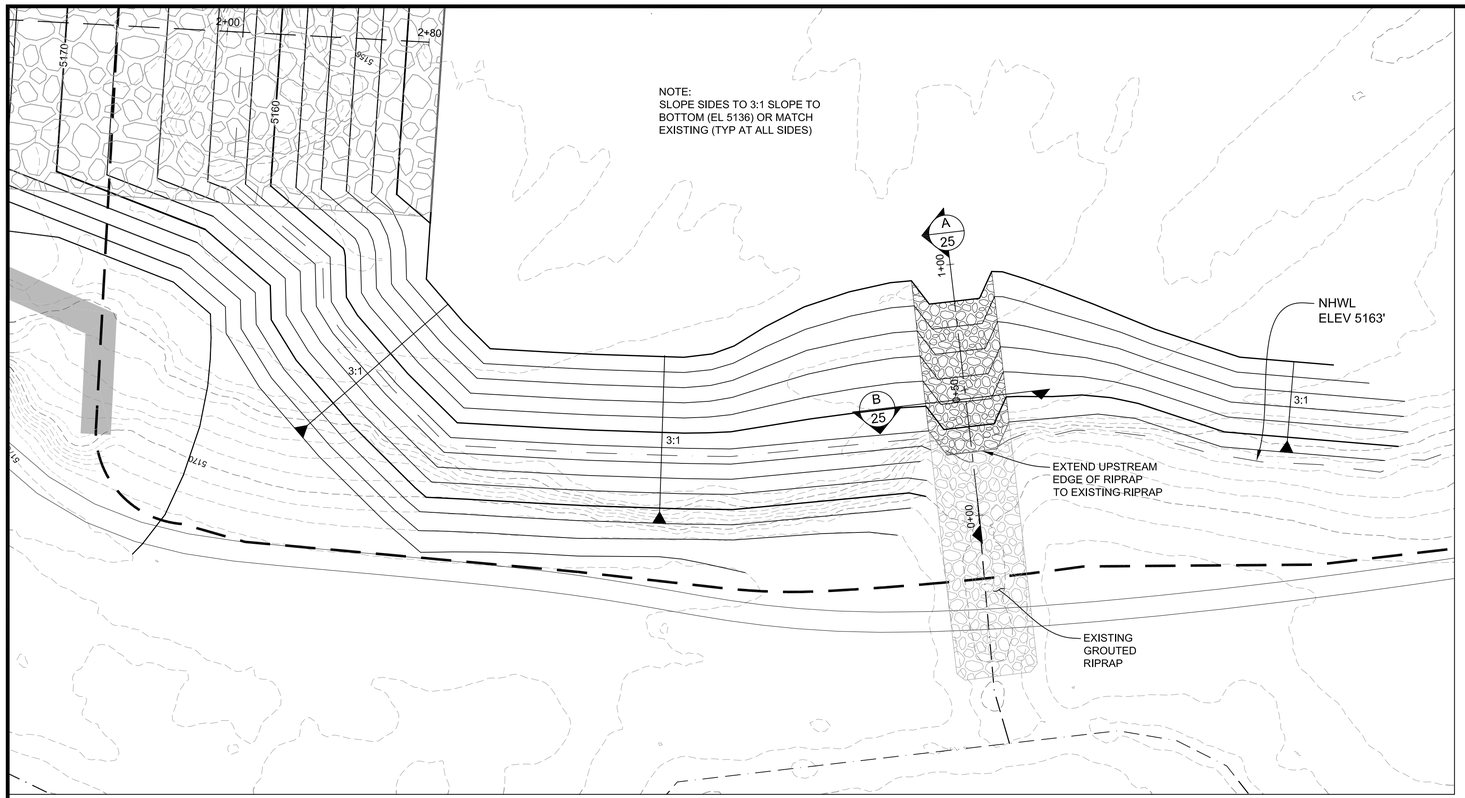

PLAN
1" = 30'
SCALE IN FEET
0 30'
NORTH

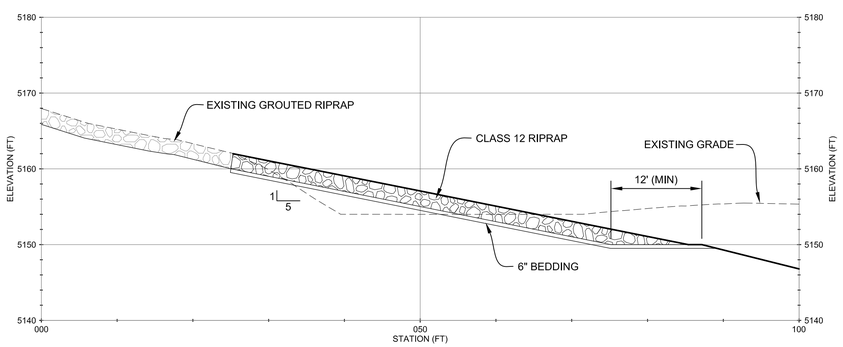

A / 25 CHANNEL PROFILE
1" = 10'
SCALE IN FEET
0 10'

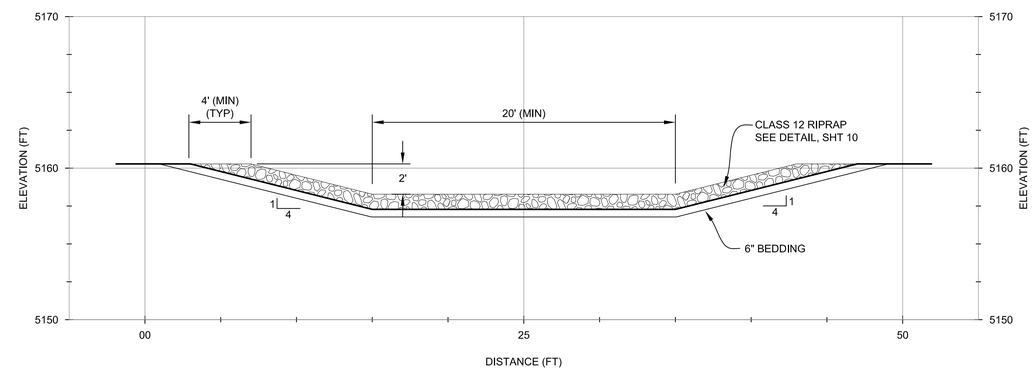

B / 25 CHANNEL SECTION
1" = 5'
SCALE IN FEET
0 5'

REVISIONS

Revision	Date	Description
1	7-25-2018	Boulder County Comments

Designed by:

Engineering Analytics, Inc.
1600 Specht Point Road, Suite 209
Fort Collins, CO 80525
(970) 488-3111

WESTERN MOBILE
LAKE 4 DAM
REHABILITATION

WEST SIDE
EMBANKMENT
PLAN AND SECTIONS

Drawn by:	RDP
Designed by:	LCB
Checked by:	LCB
Scale:	As Shown
Project No.	110446
Date:	June 28, 2018

SCALE VERIFICATION:
0 1"
IF NOT ONE INCH ON THIS SHEET, ADJUST SCALE ACCORDINGLY.

SHEETS	SHEET
26	25

C-2077

COLORADO REGISTERED
LEIF CLINTON BRUST
40188
PROFESSIONAL ENGINEER
7-25-2018

T:\110446 Western Mobile 4\Lake 3-4\Lake 3-4 Regrading 5176.dwg SAVED: 6/29/18 PRINTED: 7/25/18

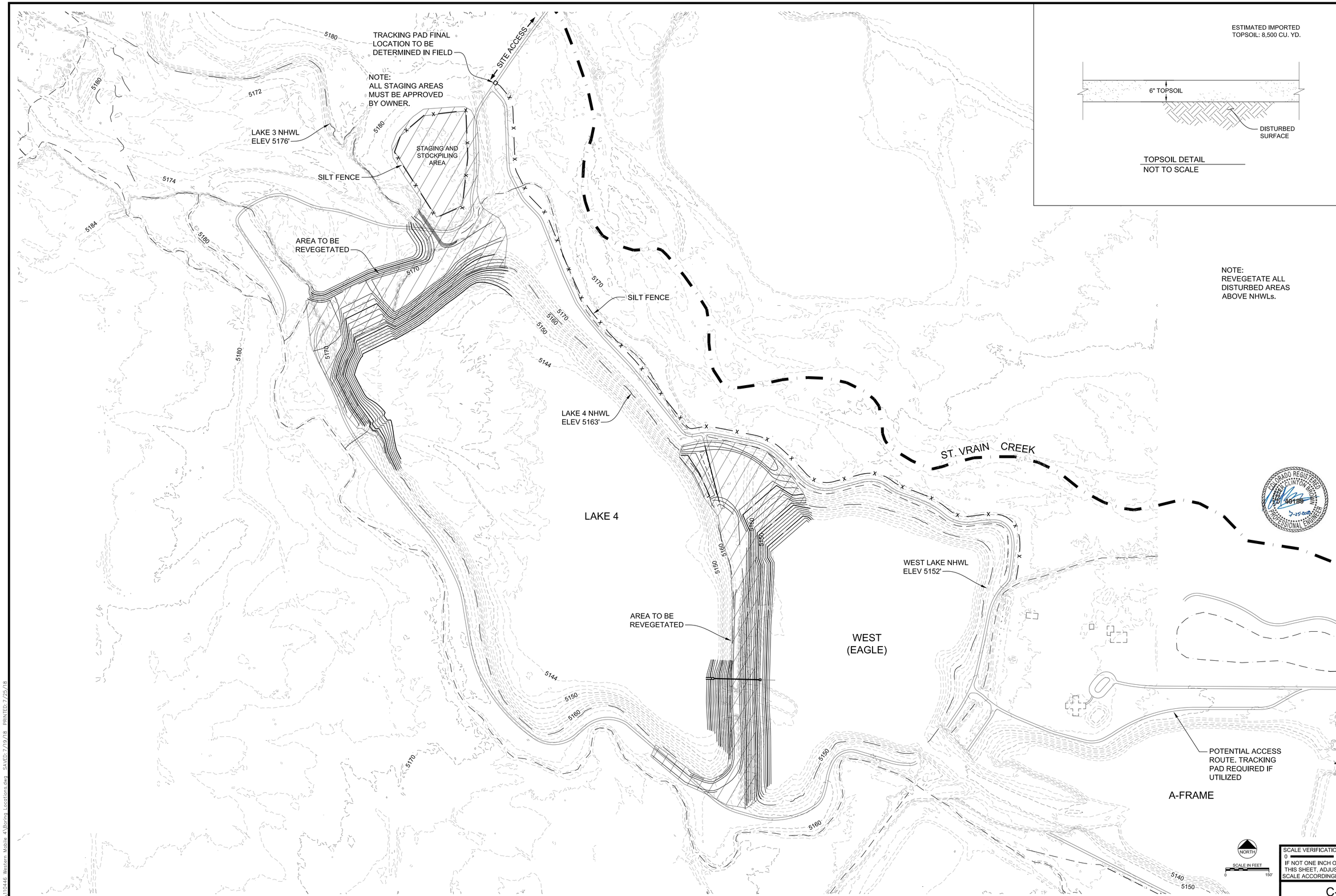

ESTIMATED IMPORTED TOPSOIL: 8,500 CU. YD.

TOPSOIL DETAIL
NOT TO SCALE

NOTE:
REVEGETATE ALL DISTURBED AREAS ABOVE NHWLs.

REVISIONS

Revision	Date	Description
1	7-25-2018	Boulder County Comments

Designed by:

Engineering Analytics, Inc.
1600 Specht Point Road, Suite 209
Fort Collins, CO 80525
(970) 488-3111

WESTERN MOBILE
LAKE 4 DAM
REHABILITATION

EROSION AND SEDIMENT CONTROL PLAN AND REVEGETATION PLAN

Drawn by:	RDP
Designed by:	LCB
Checked by:	LCB
Scale:	As Shown
Project No.	110446
Date:	June 28, 2018

SCALE VERIFICATION:
0 — 1"
IF NOT ONE INCH ON THIS SHEET, ADJUST SCALE ACCORDINGLY.

SHEETS 26 | SHEET 26

C-2077

T:\110446 Western Mobile 4\Boring Locations.dwg SAVED: 7/19/18 PRINTED: 7/25/18