WEST LAKE DAM
DAM MAINTENANCE AND REHABILITATION
CONSTRUCTION PLANS
DAM ID: 050336, Water Division 1, Water District 5
BOULDER COUNTY
JULY, 2018

OWNER: BOULDER COUNTY PARKS AND
OPEN SPACE DEPARTMENT
5201 ST. VRAIN ROAD
LONGMONT, CO 80503
(303) 413-7077

ENGINEER: APPLEGATE GROUP, INC.
1490 W 121ST AVE., SUITE 100
DENVER, CO 80234
(303) 452-6611

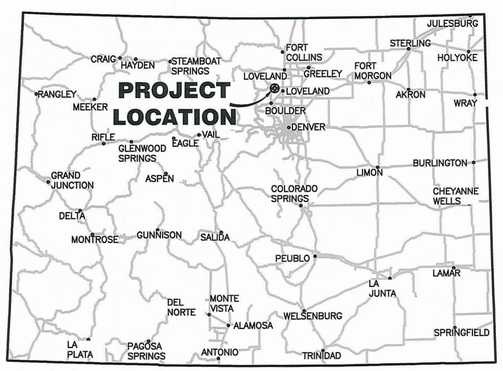

LOCATION MAP
SCALE 1" = 60 MILES

60 30 0 60
SCALE IN MILES

VICINITY MAP
SCALE 1" = 2,000'

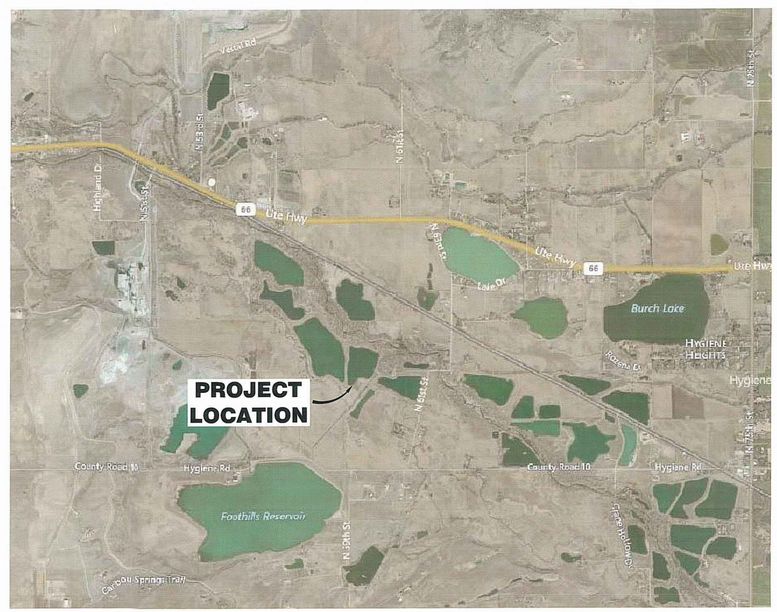

2,000 1,000 0 2,000
SCALE IN FEET

I hereby certify that these plans for the rehabilitation of West Lake Dam Rehabilitation were prepared by me or under my direct supervision for Boulder County Parks and Open Space.

_____ Colo. PE No. 43364
Steven A Smith, P.E.

Approved on the 6th day of August 20 18.

Kevin G. Rein
State Engineer

By: _____
William T. McCormick III
Chief Dam Safety Branch
Colo. P.E. No. 29127

These plans represent the AS-CONSTRUCTED conditions of West Lake Dam Rehabilitation to the best of our knowledge and judgment, based in part on information furnished by others, as of the _____ day of _____, 20__.

_____ _____
(Steven A. Smith, P.E.) (Signature)

COLORADO 811
KNOW WHAT'S BELOW. CALL BEFORE YOU DIG.

SURVEY DATUM:
THIS SURVEY WAS PERFORMED IN COLORADO STATE PLANE COORDINATES, NORTH ZONE, NAD 83 WITH NAVD 88.

NOTE:
SHEET INDEX LOCATED ON SHEET 2.

FINAL ISSUED FOR BID

Applegate Group, Inc.
Water Resource Advisors for the West
1490 West 121st Ave., Suite 100
Denver, CO 80234
(303) 452-6611
Fax: (303) 452-2759
email: info@applegategroup.com Website: www.applegategroup.com

COVER SHEET

BOULDER COUNTY
WEST LAKE DAM
REHABILITATION

NO	DATE	BY	CHK'D	DESCRIPTION
8	05/JUL/18	LLD	SS	Issued for Bid
7	18/JAN/18	LLD	SS	Revised Conc. Channel and Flume
6	26/DEC/17	LLD	SS	SEO Comments
5	19/SEP/17	LLD	SS	SEO Comments on Manhole
4	23/AUG/17	LLD	SS	SEO Comments
3	11/APR/17	LLD	SS	Revised Foothills Siphon Inlet, Added Spillway Overflow Channel

REVISIONS

Date:	JULY 26, 2018
Job No:	15-117
Drawn:	LD
Design:	CH
Checked:	SS
Scale:	As Noted

COLORADO LICENSED PROFESSIONAL ENGINEER STEVEN SMITH 43364 7/26/18

Sheet: 1 Of: 25

Filing No. C-2068

Plot Date: 07/30/18-1:58pm, Plotted by:Luke, Drawing Path: N:\Swap\AcPublish_9420\Drawing Name:W Title.dwg

GENERAL

1. CONTRACTOR IS RESPONSIBLE FOR OBTAINING ANY PERMITS REQUIRED TO PERFORM THE WORK DEPICTED ON THE CONSTRUCTION PLANS.
2. CONTRACTOR IS RESPONSIBLE FOR REPAIRING ALL DAMAGE TO EXISTING INFRASTRUCTURE RESULTING FROM CONSTRUCTION ACTIVITY.
3. BASIS OF BEARING: THE LINE BETWEEN NGS MONUMENTS M 410 AND ZDV B BEARING SOUTH 07°21'32" WEST, NAD 83 GRID BEARING, WITH ALL OTHER BEARINGS CONTAINED HEREIN RELATIVE THERETO:
4. DRAWING DOES NOT REPRESENT A MONUMENTED LAND SURVEY.
5. VERTICAL DATUM IS TAKEN FROM NGS SURVEY MARK M 410, BEING AN ELEVATION OF 5115.37 FEET NAVD 88 DATUM. MONUMENT IS LYING 2.8 MILE WESTERLY ALONG STATE HIGHWAY 66 FROM ITS JUNCTION WITH U.S. HIGHWAY 287 IN LONGMONT, 100.1 FEET NORTH OF THE CENTERLINE OF HIGHWAY 66, 67.6 FEET EAST OF A UTILITY POLE, 62 FEET NORTH OF THE NORTH END OF A CONCRETE CULVERT, AND 19.7 FEET EAST OF THE CENTER OF A FIELD ENTRANCE. MARK IS A PUNCH HOLE, TOP CENTER OF A 6.7 M LONG STAINLESS STEEL ROD, ENCLOSED IN A 5 INCH PVC PIPE WITH LOGO LID.
6. SITE ACCESS AND CONSTRUCTION ACTIVITIES LIMITED TO 8:00 AM TO 4:30 PM.

UTILITIES

1. LOCATION OF EXISTING UTILITIES IS SHOWN ACCORDING TO THE BEST INFORMATION AVAILABLE. TYPE, SIZE, LOCATION, AND NUMBER OF UTILITIES ARE APPROXIMATE WHEN SHOWN ON THE DRAWINGS. EXISTING UTILITIES SHALL BE VERIFIED BY THE CONTRACTOR PRIOR TO THE START OF CONSTRUCTION AND SHALL NOTIFY THE ENGINEER OF ANY DISCREPANCIES.
2. PRIOR TO COMMENCEMENT OF CONSTRUCTION, THE CONTRACTOR SHALL CONTACT ALL UTILITIES TO COORDINATE SCHEDULING. SHOULD ANY CONFLICTS OR CONSTRUCTION RELOCATIONS OR OTHER INTERRUPTIONS IN SERVICE BE REQUIRED THE CONTRACTOR SHALL COORDINATE UTILITY SCHEDULING WITH HIS WORK.

DETAIL REFERENCE KEY

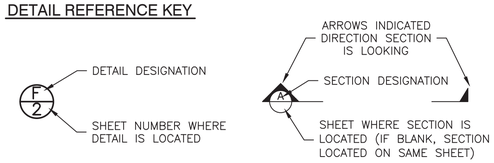

INDEX

Sheet Number	Sheet Title
1	COVER SHEET
2	GENERAL NOTES
3	SITE PLAN
4	SOIL BORING INFORMATION
5	DEMOLITION PLAN
6	OUTLET PLAN AND PROFILE
7	SPILLWAY PLAN AND PROFILE
8	SPILLWAY SECTION
9	FOOTHILLS OUTLET DITCH PLAN AND PROFILE
10	FOOTHILLS SIPHON SECTIONS
11	CLOUGH AND TRUE DITCH PLAN AND PROFILE
12	SIPHON DRAIN LINE PLAN AND PROFILES
13	REVEGETATION PLAN
14	OUTLET TOWER DETAILS
15	OUTLET TOWER DETAILS
16	DETAILS
17	DETAILS
18	FOOTHILLS OUTLET DITCH SIPHON DETAILS
19	CLOUGH AND TRUE SIPHON DETAILS
20	LAKE 4 PIPELINE MANHOLE DETAILS
21	BORROW MATERIAL SOURCES AND HAUL ROUTES
22	EROSION AND SEDIMENT CONTROL
23	SEDIMENT DISPOSAL PLAN
24	SEDIMENT DISPOSAL SECTIONS
25	EROSION AND SEDIMENT CONTROL DETAILS

West Lake Stage-Storage-Area

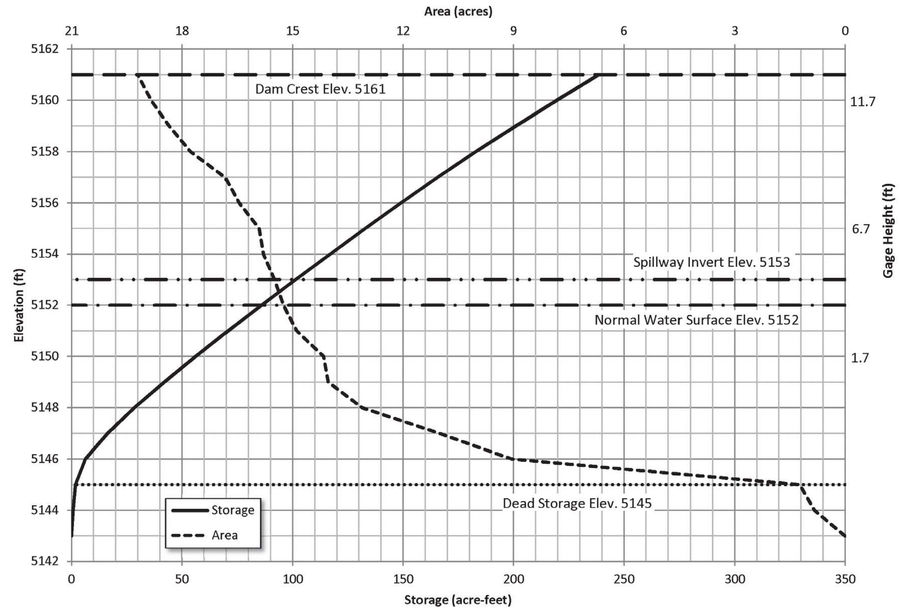

Gage Height (ft)	Elevation (ft)	Area (acre)	Volume (acre-ft)	Spillway Discharge (cfs)	18" Orifice Discharge (cfs)	6" Orifice Discharge (cfs)	20" HDPE Outlet Pipe Discharge (cfs)	Outlet Discharge (cfs)	Standpipe Outlet Discharge (cfs)
[A]	[B]	[C]	[D]	[E]	[F]	[G]	[H]	[I]	[J]
	5143	0.0	0.0						
	5144	0.8	0.8						
	5145	1.2	1.83						
	5146	9.1	6.3		5.5	1.1	3.2	3.2	
	5147	11.0	16.4		12.3	1.6	10.1	10.1	
	5148	13.1	28.5		16.5	2.0	16.2	16.2	
	5149	14.0	42.1		19.8	2.4	18.2	18.2	
1.7	5150	14.2	56.2		22.6	2.7	20.1	20.1	
2.7	5151	14.9	70.9		25.1	2.9	21.7	21.7	
3.7	5152	15.3	86.0		27.4	3.2	23.3	23.3	0.0
4.7	5153	15.5	101.4	0	29.5	3.4	24.7	24.7	19.3
5.7	5154	15.8	117.0	258	31.5	3.6	26.1	26.1	26.1
6.7	5155	15.9	132.8	879	33.4	3.8	27.5	27.5	27.5
7.7	5156	16.5	149.0	1895	35.1	4.0	28.7	28.7	28.7
8.7	5157	16.8	165.7	3345	36.8	4.2	29.9	29.9	29.9
9.7	5158	17.8	183.0	5229	38.4	4.4	31.1	31.1	31.1
10.7	5159	18.3	201.0	7429	39.9	4.5	32.2	32.2	32.2
11.7	5160	18.8	219.6	10063	41.4	4.7	33.3	33.3	33.3
12.7	5161	19.2	238.6						

Notes:
[A] Gage height based on existing gage where Elev 5152.3 feet is equal to gage height 4.0 feet.
[B] Elevation based on survey
[C] Surface area based on survey, and proposed Lake 4 Sediment Disposal
[D] Storage volume calculated in CAD based on survey data, and proposed Lake 4 Sediment Disposal
[E] Spillway discharge calculated with HEC-RAS model
[F], [G] Orifice discharge calculated using orifice flow equation: Orifice Coef x Sqrt(2 x g x h) x Orifice Area; Orifice Coef = 0.61
[H] Pipe discharge calculated based on Hazen Williams minor losses and Bernoulli Equation for energy conservation
Hazen Williams Coef = 150; Entrance Loss Coef = 0.6; Exit Loss Coef = 1
[I] Outlet discharge calculated as minimum of pipe discharge [G] and 18" orifice discharge [E]
[J] Standpipe outlet discharge calculated as minimum weir flow for 6' wide weir, and 20" pipe flow discharge [G]
Weir flow equation, used weir coef of 3.3: Coef x Weir Length x Water Height^(3/2)

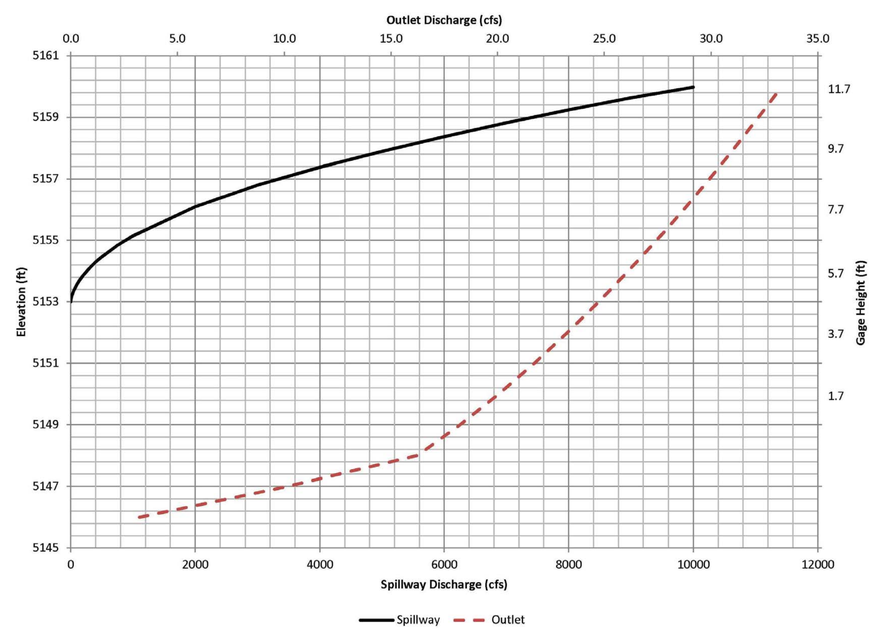

ABBREVIATIONS LIST

CD	CHECK DAM
CF	CONSTRUCTION FENCE
CL	CENTERLINE
CMP	CORRUGATED METAL PIPE
CWA	CONCRETE WASHOUT AREA
DIA	DIAMETER
ELEV	ELEVATION
FT	FOOT
GALV	GALVANIZED
HAS	HEADED ANCHOR STUD
HDPE	HIGH DENSITY POLYETHYLENE
INV	INVERT
MAX	MAXIMUM
MIN	MINIMUM
N.W.S.E	NORMAL WATER SURFACE ELEVATION
NIC	NOT IN CONTRACT
O.C.	ON CENTER
O.C.E.W.	ON CENTER EACH WAY
OCEWEF	ON CENTER EACH WAY EACH FACE
PSI	POUNDS PER SQUARE INCH
SF	SILT FENCE
SHT	SHEET
SP	STOCKPILE
STA	STATION
TOC	TOP OF CONCRETE
TOD	TOP OF DITCH
TYP	TYPICAL
VTC	VEHICLE TRACKING CONTROL
W.S.E.	WATER SURFACE ELEVATION

Applegate Group, Inc.
Water Resource Advisors for the West
1490 West 121st Ave., Suite 100
Denver, CO 80234
(303) 452-6611
Fax: (303) 452-2759
email: info@applegategroup.com Website: www.applegategroup.com

GENERAL NOTES

BOULDER COUNTY
WEST LAKE DAM
REHABILITATION

NO	DATE	BY	CHK'D	DESCRIPTION
8	05/JUL/18	LLD	SS	Issued For Bid
7	18/JAN/18	LLD	SS	Revised Conc. Channel and Flume
6	26/DEC/17	LLD	SS	SEO Comments
5	19/SEP/17	LLD	SS	SEO Comments on Manhole
4	23/AUG/17	LLD	SS	SEO Comments
3	11/APR/17	LLD	SS	Revised Foothills Siphon Inlet Added Spillway Overflow Channel

REVISIONS

Date: JULY 26, 2018
Job No: 15-117
Drawn: LD
Design: CH
Checked: SS
Scale: N/A

COLORADO LICENSED
STEVEN SMITH
43364
7/26/18
PROFESSIONAL ENGINEER

Sheet: 2
Of: 25

Filing No. C-2068

Plot Date: 07/20/18 - 3:49pm, Plotted by:Luke, Drawing Path: N:\Swap_Xc\Publish_94201\Drawing_Name\W_General_Notes.dwg

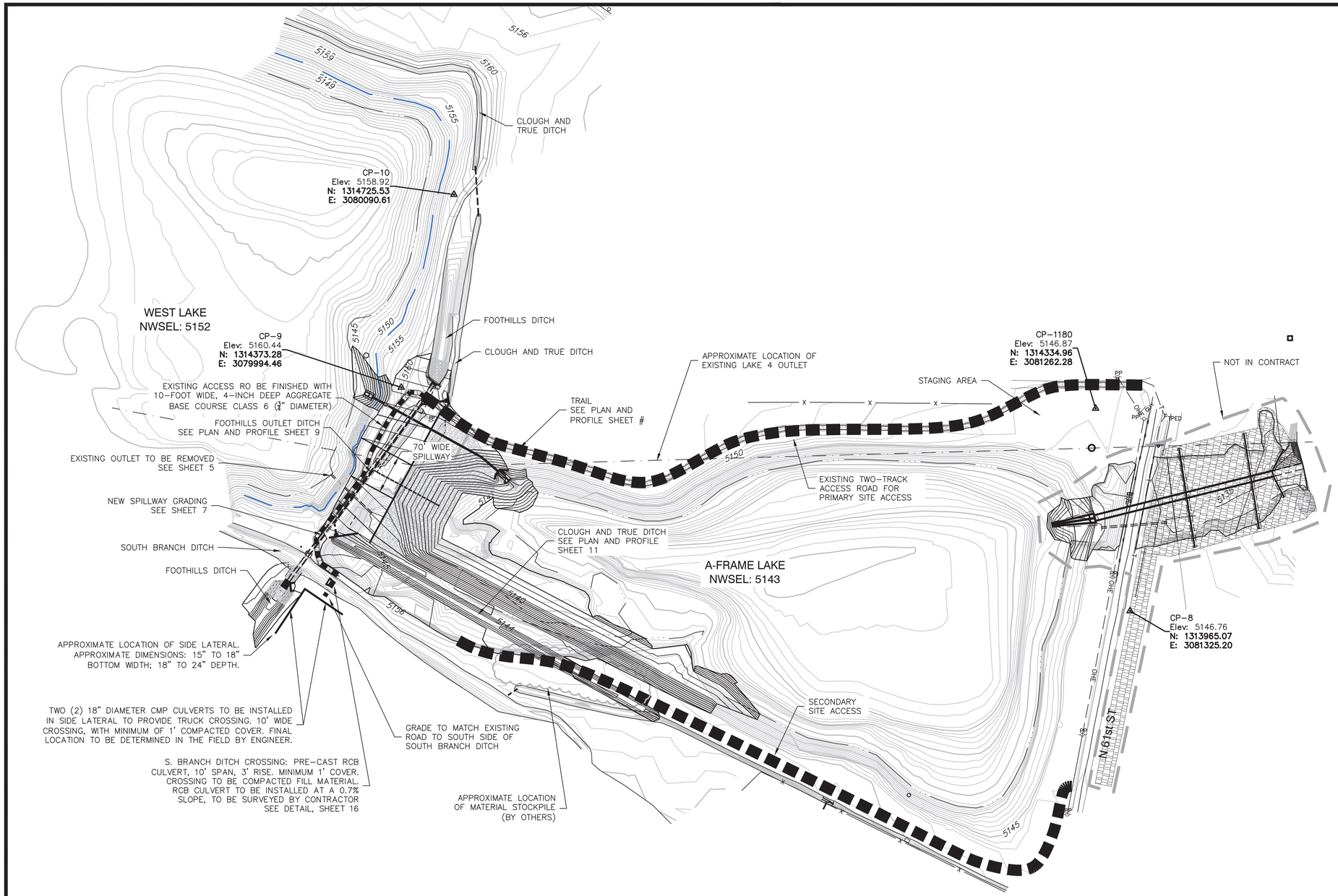

Scale 1" = 100'
1' CONTOUR INTERVAL

100 50 0 100 200 300
SCALE IN FEET

Applegate Group, Inc.
Water Resource Advisors for the West
1490 West 121st Ave., Suite 100
Denver, CO 80234
(303) 452-6611
Fax: (303) 452-2759
email: info@applegategroup.com Website: www.applegategroup.com

SITE PLAN

BOULDER COUNTY
WEST LAKE DAM REHABILITATION

NO	DATE	BY	CHK'D	DESCRIPTION
8	05/JUL/18	LLD	SS	*Issued For Bid*
7	18/JAN/18	LLD	SS	*Revised Conc. Channel and Flume.*
6	26/DEC/17	LLD	SS	*SEO Comments.*
5	19/SEP/17	LLD	SS	*SEO Comments on Manhole.*
4	23/AUG/17	LLD	SS	*SEO Comments.*
3	11/APR/17	LLD	SS	*Revised Foothills Siphon Inlet. Added Spillway Overflow Channel.*

REVISIONS

Date:	JULY 26, 2018
Job No:	15-117
Drawn:	LD
Design:	CH
Checked:	SS
Scale:	1" = 100'

COLORADO LICENSED
STEVEN SMITH
43364
7/26/18
PROFESSIONAL ENGINEER

Sheet: **3** Of: **25**

Filing No. C-2068

Plot Date: 07/30/18-1:38pm, Plotted by:Luke, Drawing Path: N:\15117 Westlake and A Frame\Drawings\Plan Set\Westlake\Drawing Name\W Site Overview.dwg

PROJECT NO:	15.134		
PROJECT NAME:	West Lake & A-Frame Reservoirs Rehab		
DRAWN BY:	KFK	CHECKED BY:	JAC2
DWG DATE:	08.17.2015	REV. DATE:	--

FIGURE 1
Boring Locations
Not to Scale

CESARE, INC.
Geotechnical Engineers & Construction Materials Consultants

KEY TO SYMBOLS

Symbol	Description
Strata symbols	
	FILL, B-1: SAND, silty, clayey, with gravel, medium dense, low plasticity, slightly moist to very moist, brown (SC-SM, A- 1-b). B-5: GRAVEL, loose to very dense, well graded, nonplastic, brown (GW, A-1-a). B-6: GRAVEL, silty, clayey, with sand, medium to very dense, low plasticity, moist to very moist, brown (GC-GM, A-2-4); SAND, silty to silty clayey, with gravel locally, medium to very dense, low plasticity, moist to wet, dark gray to black (SC, A-2-6; SC-SM, A-2-4).
	GRAVEL, with silt and/or clay, with sand, poorly graded, dense to very dense, nonplastic, moist to wet, brown to dark brown to gray (GP-GM, A-1-a).
	SAND, clayey, some gravel, loose to very dense, low plasticity, moist to very moist, dark brown to gray (SC, A-6).
	CLAYSTONE, very hard, slightly moist, gray to dark gray.
Misc. Symbols	
	Water table during drilling
	Water table 6-7 days and 14-15 days after drilling

Symbol	Description
Soil Samplers	
	California sampler
	Standard penetration test
	Bulk/Grab sample

Notes:

1. 15/12 indicates 15 blows with a 140-pound hammer falling 30 inches were required to drive a modified California barrel sampler or split-spoon sampler 12 inches.

2. Exploratory borings B-1 through B-6 were drilled on July 16 and 17, 2015 using a CME45 drill rig equipped with a both 4-inch diameter continuous flight auger and 8-inch diameter hollow stem auger.

3. Locations for borings B-1 through B-6 were measured from landmarks using a tape measure by Cesare, Inc. after borings were drilled. Relative elevations of borings B-1 through B-6 were determined by Cesare, Inc. using topography provided by Applegate Group.

4. Groundwater was encountered at depths of 6 to 20 feet in all borings during drilling. For safety purposes, boring B-1 was backfilled at drilling completion. Monitoring wells/piezometers were installed in borings B-2, B-5, and B-6 at the time of drilling. Boring B-3 caved after drilling and B-4 caved before the second measurement.

5. These logs are subject to the limitations, conclusions, and recommendations in this report.
Project No. 15.134.

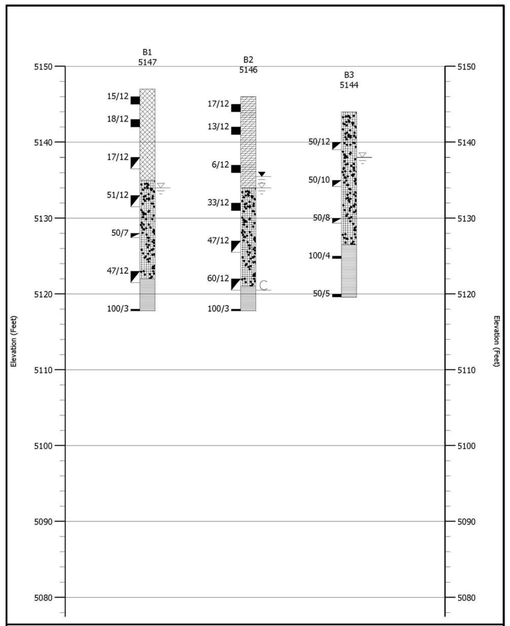

FIGURE 2
BORING LOGS

PROJECT NO:	15.134
PROJECT NAME:	West Lake and A-Frame Reservoir
DWG DATE:	8/17/2015

CESARE, INC.
Geotechnical Engineers & Construction Materials Consultants

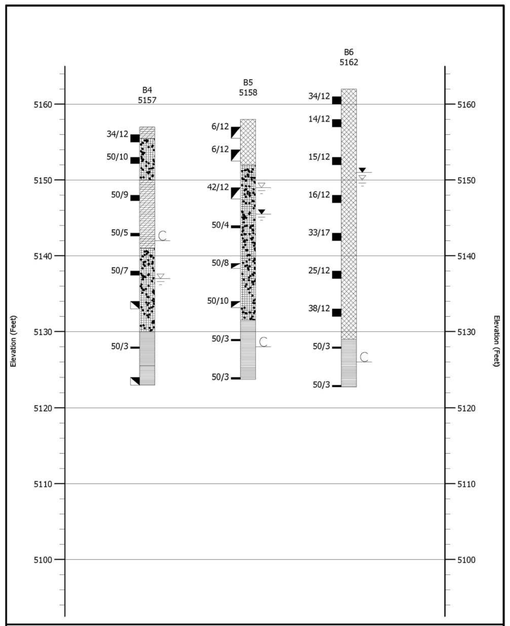

FIGURE 3
BORING LOGS

PROJECT NO:	15.134
PROJECT NAME:	West Lake and A-Frame Reservoir
DWG DATE:	8/17/2015

CESARE, INC.
Geotechnical Engineers & Construction Materials Consultants

Applegate Group, Inc.
Water Resource Advisors for the West
1490 West 121st Ave., Suite 100
Denver, CO 80234
(303) 452-6611
Fax: (303) 452-2759
email: info@applegategroup.com Website: www.applegategroup.com

SOIL BORING INFORMATION

BOULDER COUNTY
WEST LAKE DAM
REHABILITATION

NO	DATE	BY	CHK'D	DESCRIPTION
8	05/JUL/18	LLD	SS	*Issued for Bid*
7	18/JAN/18	LLD	SS	*Revised Cons. Channel and Plume*
6	26/DEC/17	LLD	SS	*SEO Comments*
5	19/SEP/17	LLD	SS	*SEO Comments on Manhole*
4	23/AUG/17	LLD	SS	*SEO Comments*
3	11/APR/17	LLD	SS	*Revised Foothills Siphon Inlet, Added Spillway Overflow Channel*

REVISIONS

Date: JULY 26, 2018
Job No: 15-117
Drawn: LD
Design: CH
Checked: SS
Scale: 1" = 100'

COLORADO LICENSED
STEVEN SMITH
43364
7/26/18
PROFESSIONAL ENGINEER

Sheet: 4
Of: 25

Filing No. C-2068

Plot Date: 07/30/18-1:38pm, Plotted by:Luke, Drawing Path: N:\15117 Westlake and A Frame\Drawings\Plan Set\Westlake\Drawing Items\W Site Overview.dwg

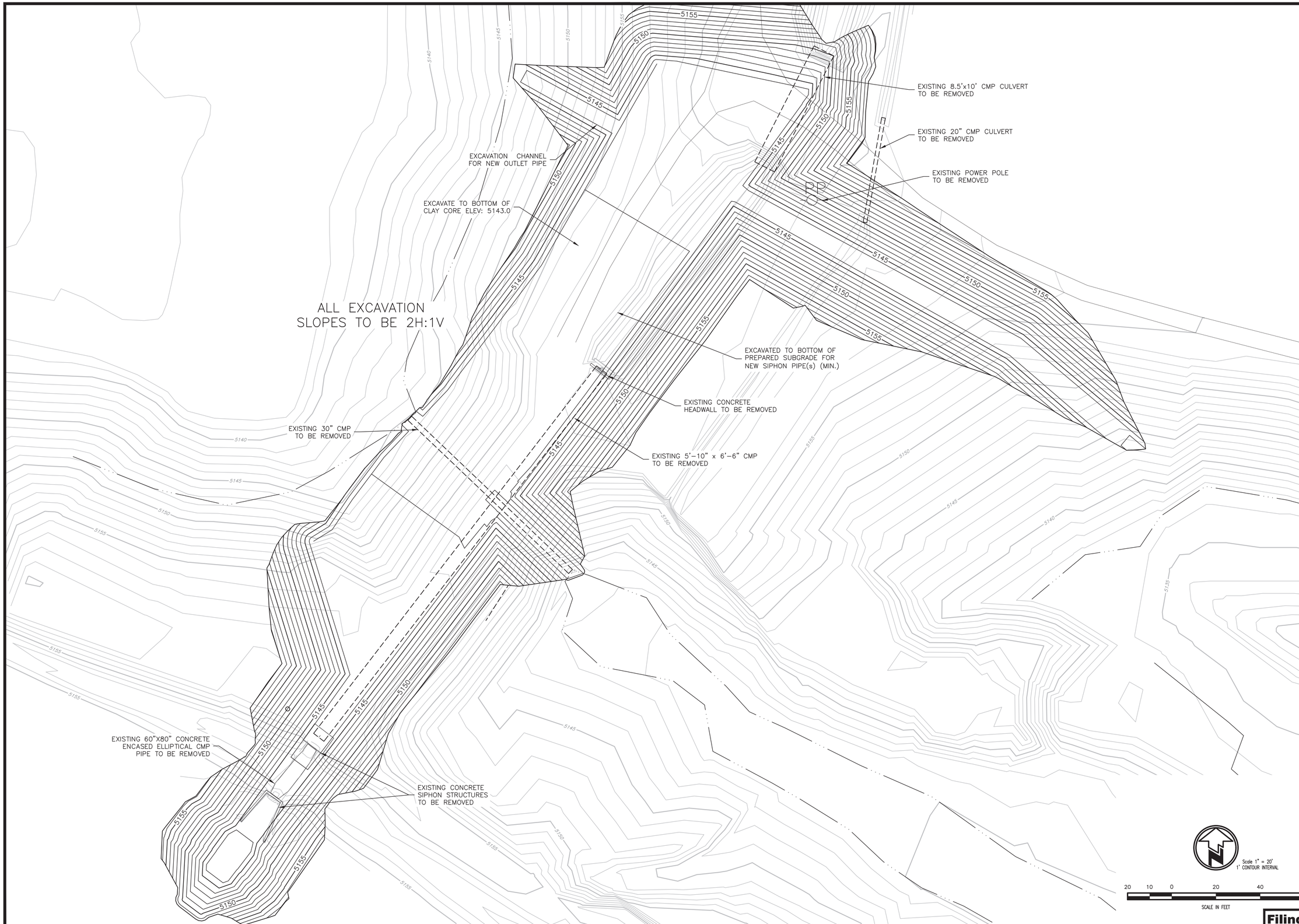

Applegate Group, Inc.
Water Resource Advisors for the West
1490 West 121st Ave., Suite 100
Denver, CO 80234
(303) 452-6611
Fax: (303) 452-2759
email: info@applegategroup.com Website: www.applegategroup.com

DEMOLITION PLAN

BOULDER COUNTY
WEST LAKE DAM
REHABILITATION

NO	DATE	BY	CHK'D	DESCRIPTION
8	05/JUL/18	LLD	SS	Issued for Bid
7	18/JAN/18	LLD	SS	Revised Conc. Channel and Flume
6	26/DEC/17	LLD	SS	SEO Comments
5	19/SEP/17	LLD	SS	SEO Comments on Manhole
4	23/AUG/17	LLD	SS	SEO Comments
3	11/APR/17	LLD	SS	Revised Foothills Siphon Inlet, Added Spillway Overflow Channel

REVISIONS

Date:	JULY 26, 2018
Job No:	15-117
Drawn:	LD
Design:	CH
Checked:	SS
Scale:	1" = 20'

COLORADO LICENSED
STEVEN SMITH
43364
7/26/18
PROFESSIONAL ENGINEER

Sheet: **5**
Of: **25**

Filing No. C-2068

Plot Date: 07/30/18-1:38pm, Plotted by:jake, Drawing Path: N:\15117 Westlake and A Frame\Drawings\Plan Set\Westlake\Drawing Name:W Ex Pipe Excav PmP.dwg

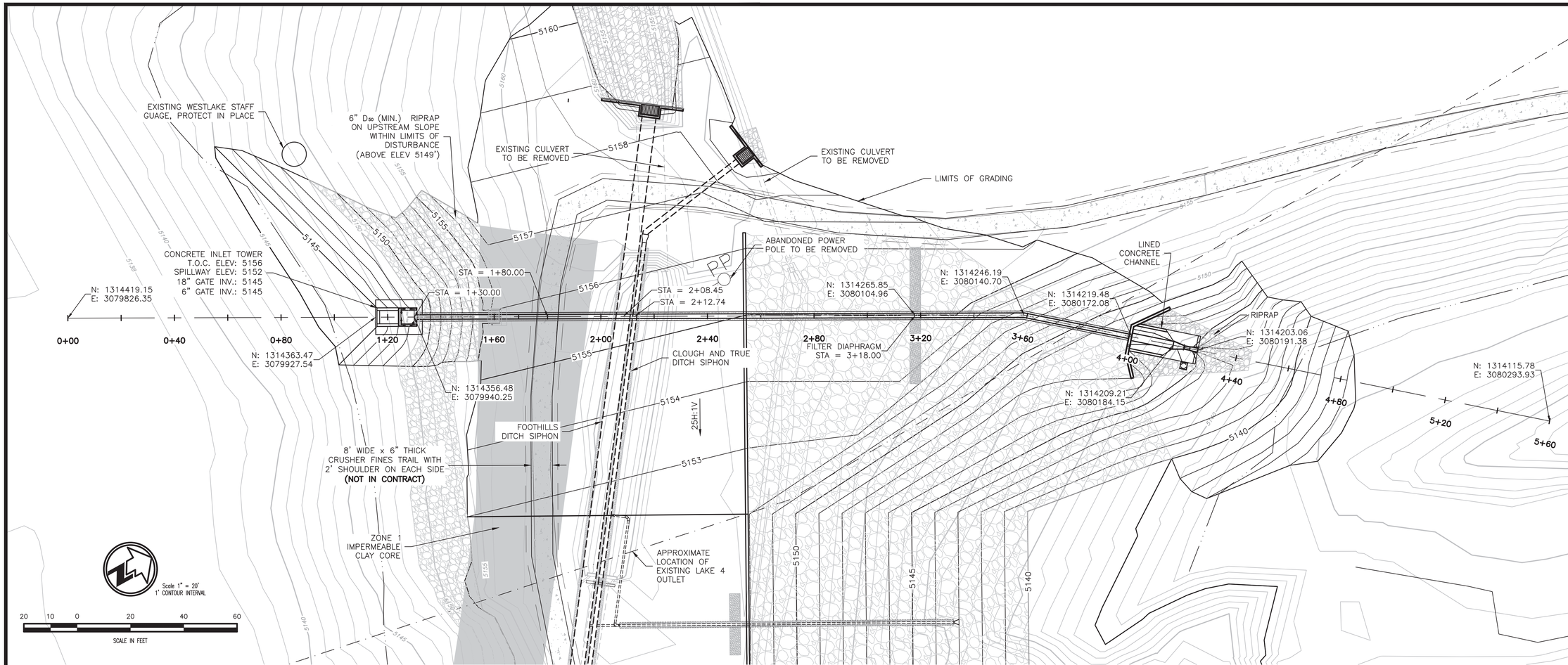

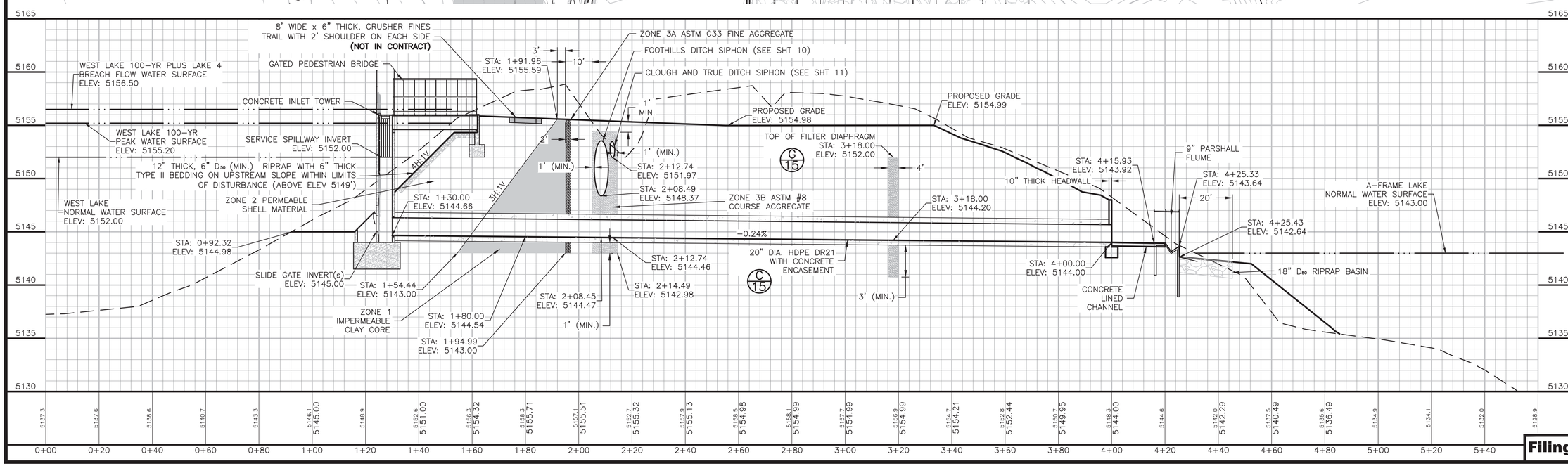

Applegate Group, Inc.
Water Resource Advisors for the West
1490 West 121st Ave., Suite 100
Denver, CO 80234
(303) 452-6611
Fax: (303) 452-2759
email: info@applegategroup.com Website: www.applegategroup.com

OUTLET PLAN AND PROFILE

BOULDER COUNTY
WEST LAKE DAM REHABILITATION

NO	DATE	BY	CHK'D	DESCRIPTION
8	05/JUL/18	LLD	SS	Issued for Bid
7	18/JAN/18	LLD	SS	Revised Conc. Channel and Flume
6	26/DEC/17	LLD	SS	SEO Comments
5	19/SEP/17	LLD	SS	SEO Comments on Manhole
4	23/AUG/17	LLD	SS	SEO Comments
3	11/APR/17	LLD	SS	Revised Foothills Siphon Inlet, Added Spillway Overflow Channel

REVISIONS

Date:	JULY 26, 2018
Job No:	15-117
Drawn:	LD
Design:	CH
Checked:	SS
Scale:	1"=20'H 1"=5' V

COLORADO LICENSED STEVEN SMITH 43364 7/26/18 PROFESSIONAL ENGINEER

Sheet: 6 Of: 25

Filing No. C-2068

Plot Date: 07/30/18-1:38pm, Plotted by:Luke, Drawing Path: N:\15117 Westlake and A Frame\Drawings\Plan Set\Westlake\Drawing Name:W Outlet PHP.dwg

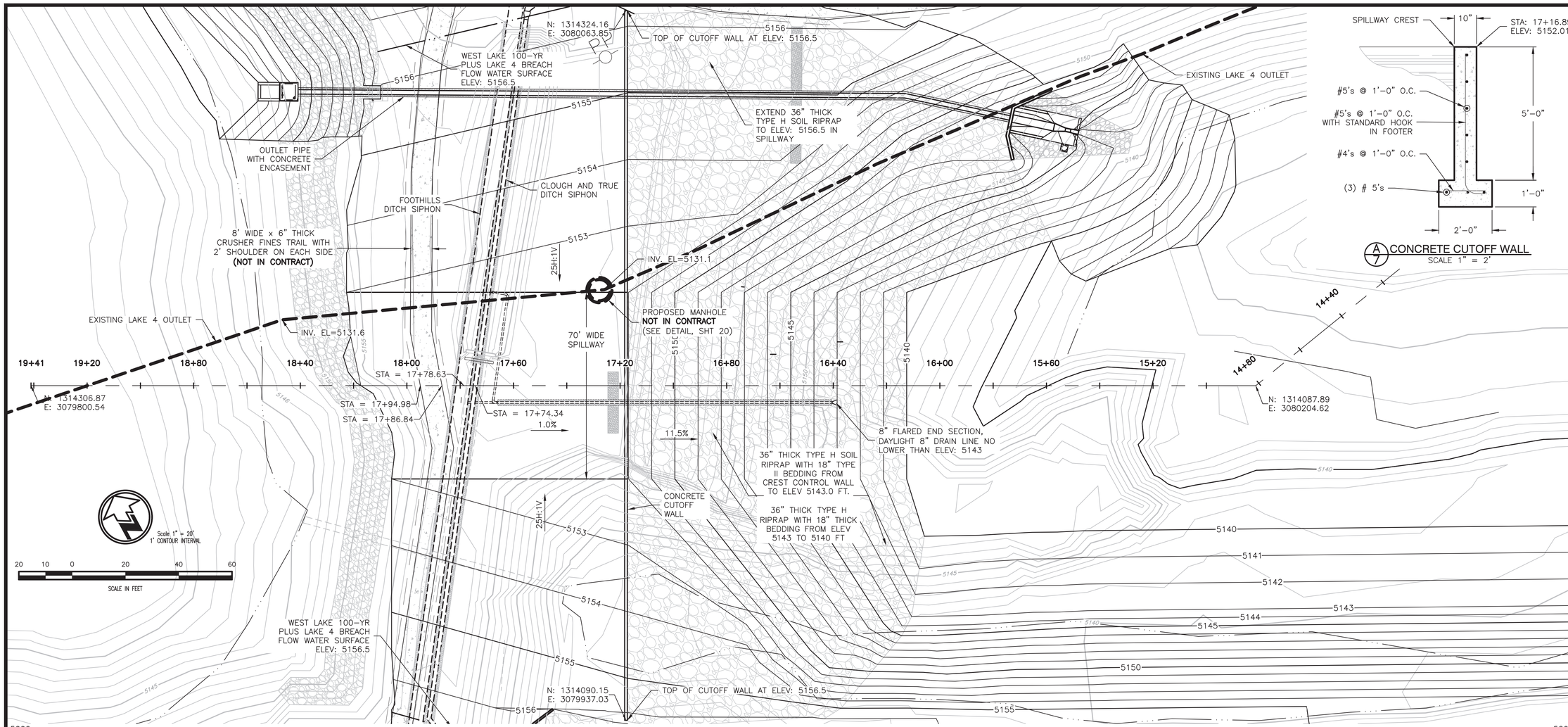

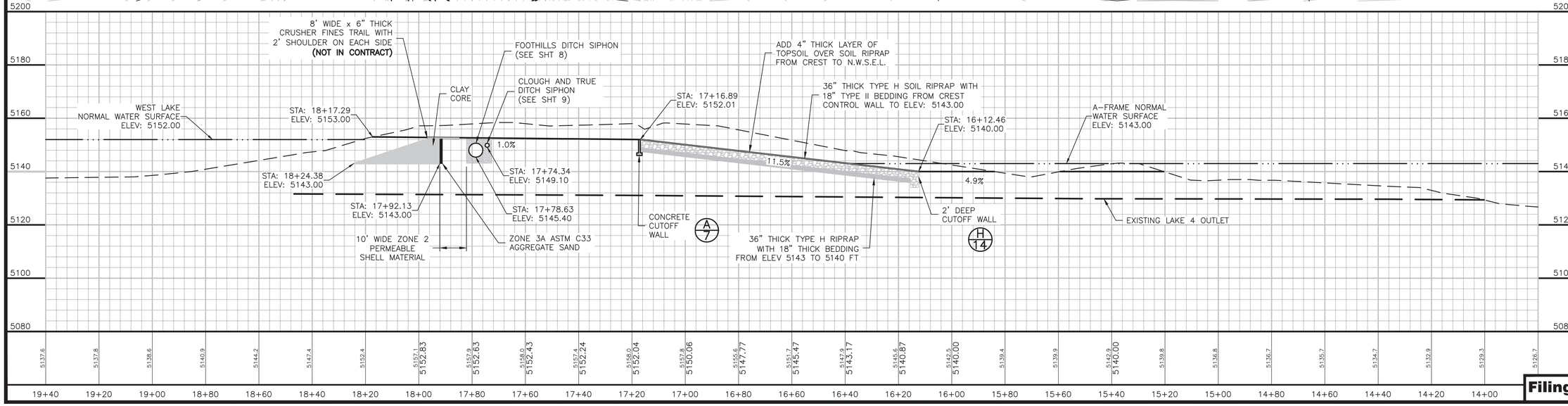

Applegate Group, Inc.
Water Resource Advisors for the West
1490 West 121st Ave., Suite 100
Denver, CO 80234
(303) 452-6611
Fax: (303) 452-2759
email: info@applegategroup.com Website: www.applegategroup.com

SPILLWAY PLAN AND PROFILE

BOULDER COUNTY
WEST LAKE DAM
REHABILITATION

NO	DATE	BY	CHK'D	DESCRIPTION
8	05/JUL/18	LLD	SS	Issued for Bid
7	18/JAN/18	LLD	SS	Revised Conc. Channel and Flume
6	26/DEC/17	LLD	SS	SEO Comments
5	19/SEP/17	LLD	SS	SEO Comments on Manhole
4	23/AUG/17	LLD	SS	SEO Comments
3	11/APR/17	LLD	SS	Revised Foothills Siphon Inlet, Added Spillway Overflow Channel

REVISIONS

Date:	JULY 26, 2018
Job No:	15-117
Drawn:	LD
Design:	CH
Checked:	SS
Scale:	1" = 20'

COLORADO LICENSED
STEVEN SMITH
43364
7/26/18
PROFESSIONAL ENGINEER

Sheet: **7**
Of: **25**

Filing No. C-2068

Plot Date: 07/30/18-1:38pm, Plotted by:Luke, Drawing Path: N:\15117 Westlake and A Frame\Drawings\Plan Set\Westlake\Drawing Name\8 Spillway Plan.dwg

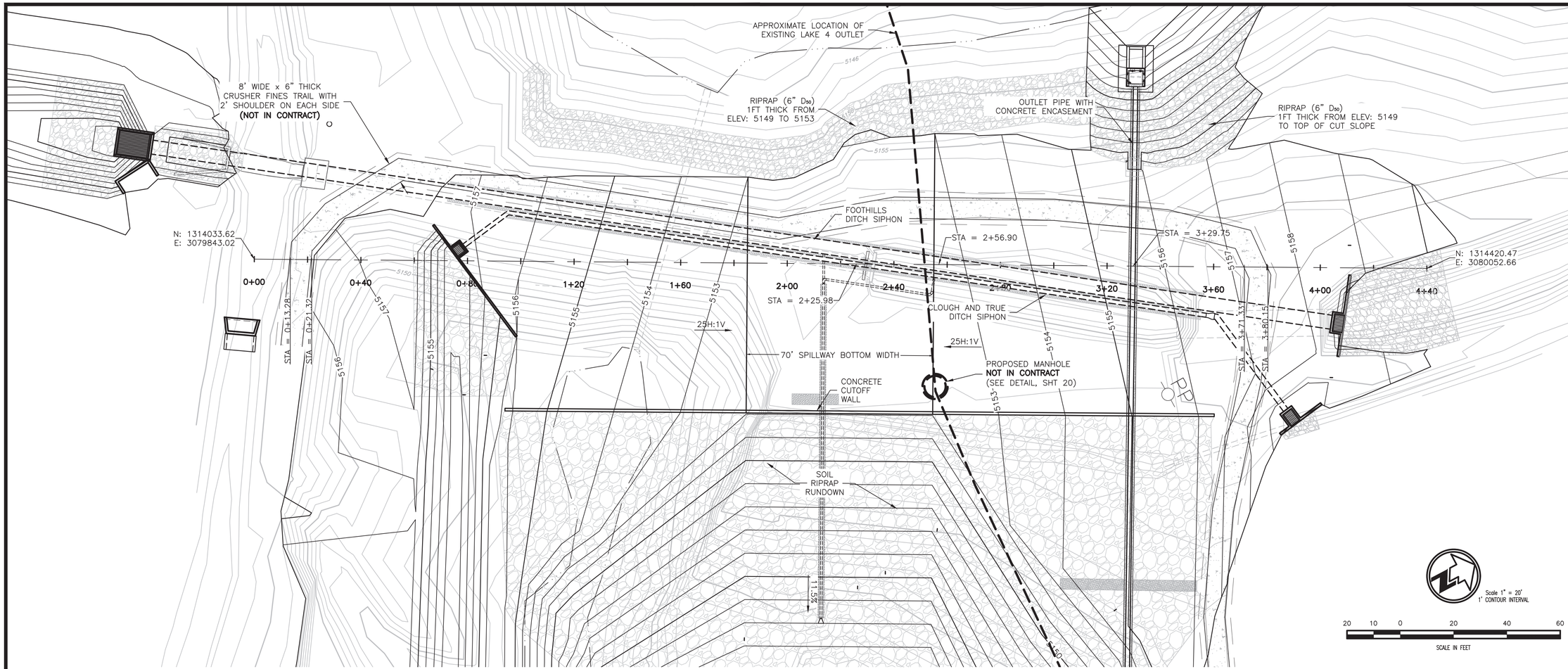

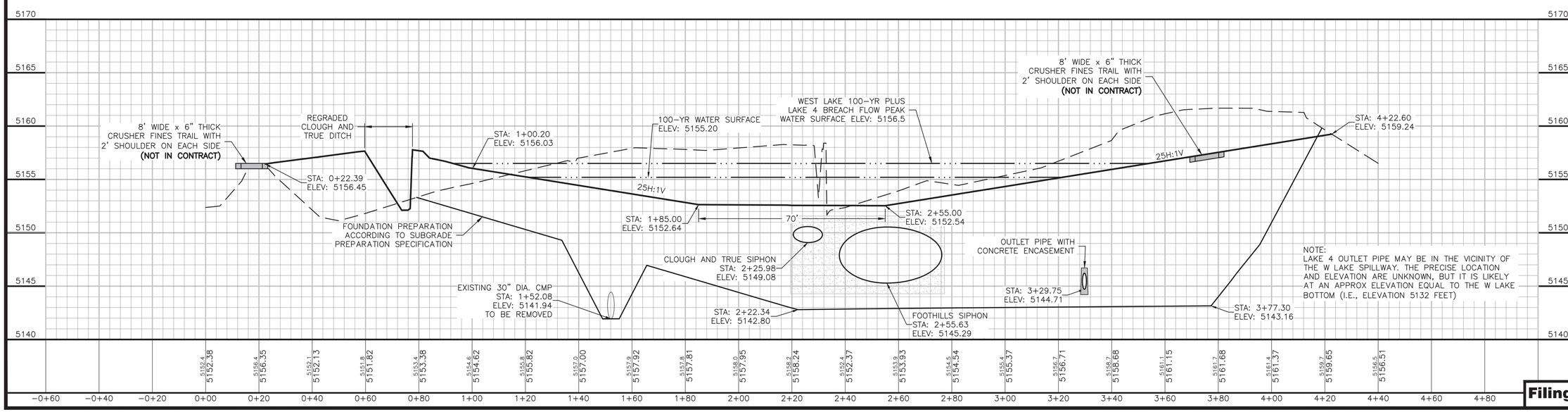

Applegate Group, Inc.
Water Resource Advisors for the West
1490 West 121st Ave., Suite 100
Denver, CO 80234
(303) 452-6611
Fax: (303) 452-2759
email: info@applegategroup.com Website: www.applegategroup.com

SPILLWAY SECTION

BOULDER COUNTY
WEST LAKE DAM
REHABILITATION

NO	DATE	BY	CHK'D	DESCRIPTION
8	05/JUL/18	LLD	SS	Issued for Bid
7	18/JAN/18	LLD	SS	Revised Cons. Channel and Flume
6	26/DEC/17	LLD	SS	SEO Comments
5	19/SEP/17	LLD	SS	SEO Comments on Manhole
4	23/AUG/17	LLD	SS	SEO Comments
3	11/APR/17	LLD	SS	Revised Foothills Siphon Inlet, Added Spillway Overflow Channel

REVISIONS

Date:	JULY 26, 2018
Job No:	15-117
Drawn:	LD
Design:	CH
Checked:	SS
Scale:	1" = 20'H / 1"=5'V

COLORADO LICENSED STEVEN SMITH 43364 7/26/18 PROFESSIONAL ENGINEER

Sheet: 8 Of: 25

Filing No. C-2068

Plot Date: 07/30/18-1:38pm, Plotted by:Luke, Drawing Path: N:\15117 Westlake and A Frame\Drawings\Plan Set\Westlake\Drawing Items\W Spillway Section.dwg

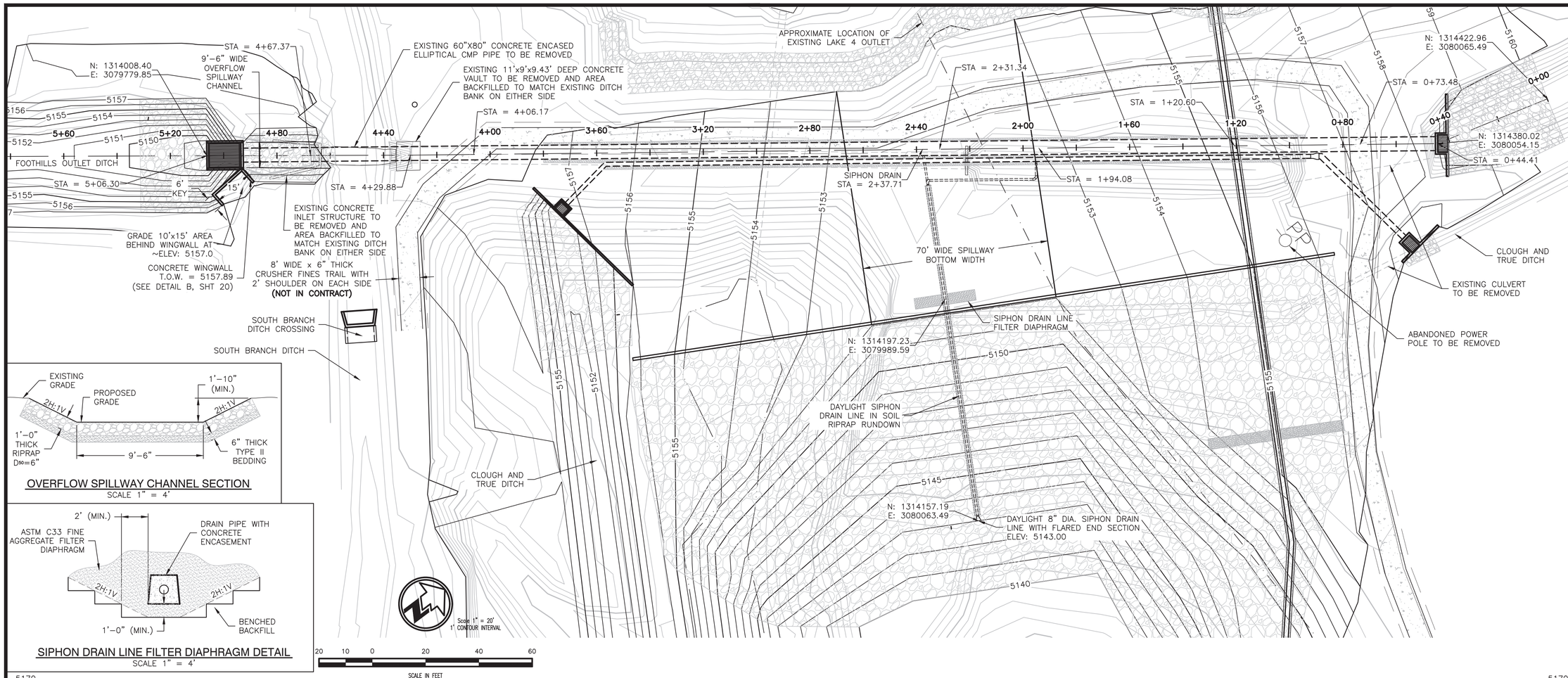

OVERFLOW SPILLWAY CHANNEL SECTION
SCALE 1" = 4'

SIPHON DRAIN LINE FILTER DIAPHRAGM DETAIL
SCALE 1" = 4'

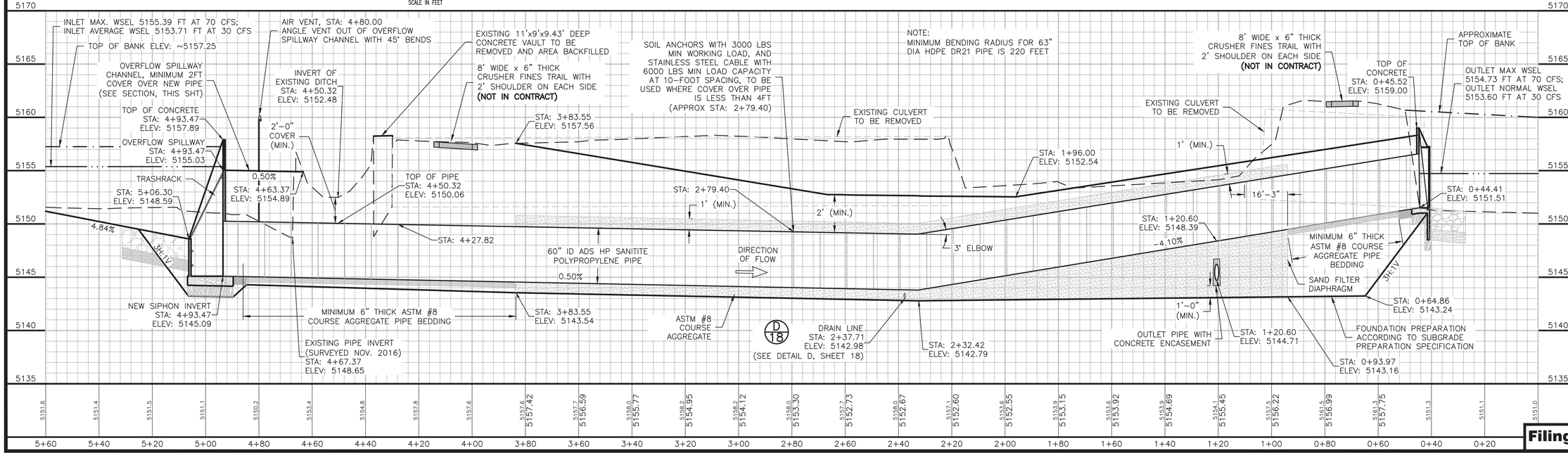

Applegate Group, Inc.
Water Resource Advisors for the West
1490 West 121st Ave., Suite 100
Denver, CO 80234
(303) 452-6611
Fax: (303) 452-2759
email: info@applegategroup.com Website: www.applegategroup.com

FOOTHILLS OUTLET DITCH PLAN AND PROFILE

BOULDER COUNTY
WEST LAKE DAM REHABILITATION

NO	DATE	BY	CHK'D	DESCRIPTION
8	05/JUL/18	LLD	SS	Issued for Bid
7	18/JAN/18	LLD	SS	Revised Conc. Channel and Flume
6	26/DEC/17	LLD	SS	SEO Comments
5	19/SEP/17	LLD	SS	SEO Comments on Manhole
4	23/AUG/17	LLD	SS	Revised Foothills Siphon Inlet, Added Spillway Overflow Channel
3	11/APR/17	LLD	SS	Initial Submittal

REVISIONS

Date: JULY 26, 2018
Job No: 15–117
Drawn: LD
Design: CH
Checked: SS
Scale: 1" = 20'H / 1"=5'V

COLORADO LICENSED STEVEN SMITH 43364 7/26/18 PROFESSIONAL ENGINEER

Sheet: 9
Of: 25

Filing No. C-2068

Plot Date: 07/30/18–1:38pm, Plotted by:Lee, Drawing Path: N:\15117 Westlake and A Frame\Drawings\Plan Set\Westlake\Drawing Name\8 Foothills Plot.dwg

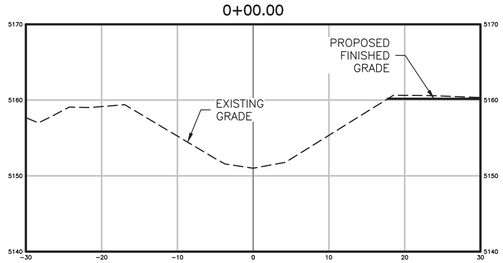

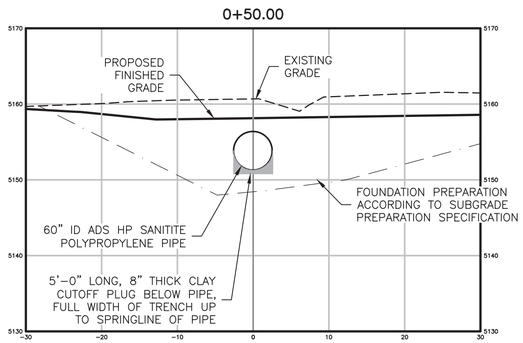

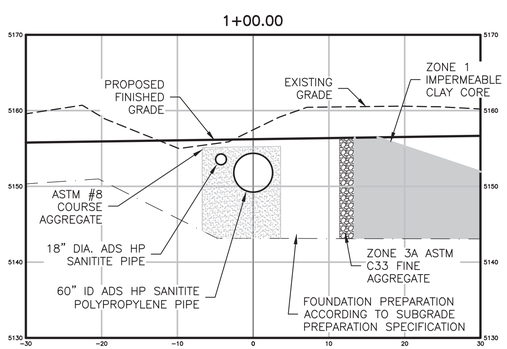

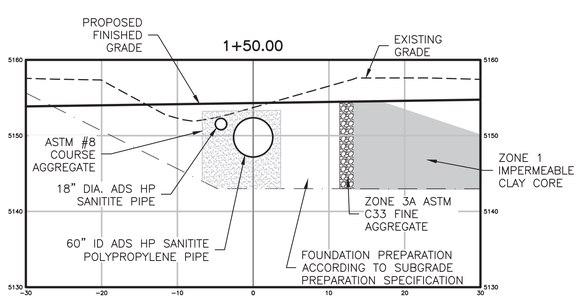

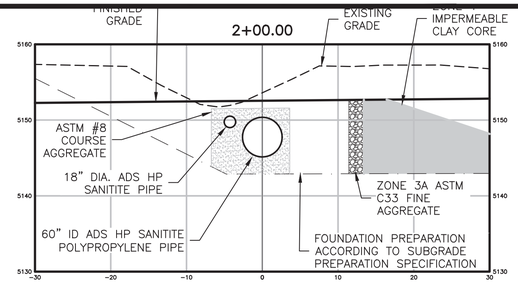

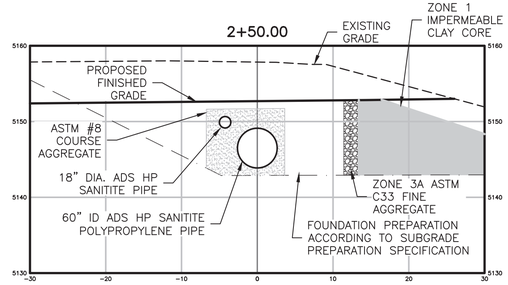

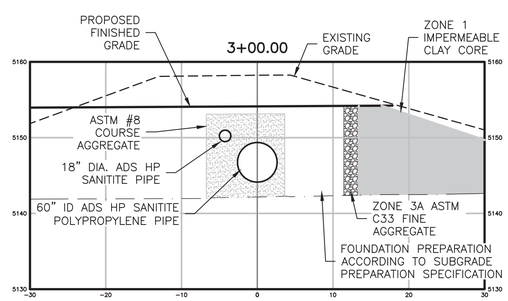

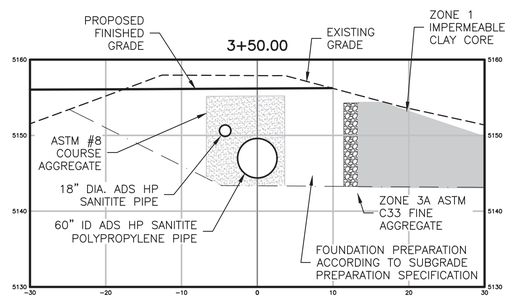

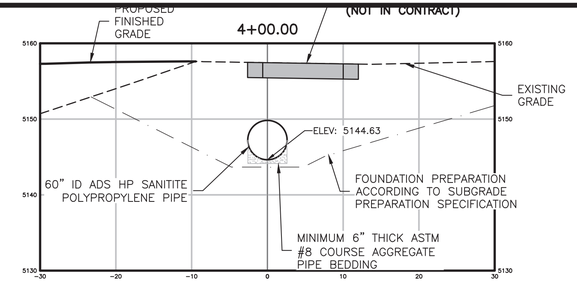

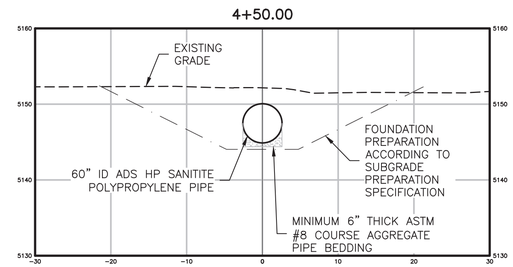

Applegate Group, Inc.
Water Resource Advisors for the West
1490 West 121st Ave., Suite 100
Denver, CO 80234
(303) 452-6611
Fax: (303) 452-2759
email: info@applegategroup.com Website: www.applegategroup.com

FOOTHILLS SIPHON SECTIONS

BOULDER COUNTY
WEST LAKE DAM
REHABILITATION

NO	DATE	BY	CHK'D	DESCRIPTION
8	05/JUL/18	LLD	SS	Issued for Bid
7	18/JAN/18	LLD	SS	Revised Conc. Channel and Flume
6	26/DEC/17	LLD	SS	SEO Comments
5	19/SEP/17	LLD	SS	SEO Comments on Manhole
4	23/AUG/17	LLD	SS	SEO Comments
3	11/APR/17	LLD	SS	Revised Foothills Siphon Inlet, Added Spillway Overflow Channel

REVISIONS

Date:	JULY 26, 2018
Job No:	15-117
Drawn:	LD
Design:	CH
Checked:	SS
Scale:	1" = 10' H&V

COLORADO LICENSED STEVEN SMITH 43364 7/26/18 PROFESSIONAL ENGINEER

Sheet: 10 Of: 25

Filing No. C-2068

Plot Date: 07/30/18-1:38pm, Plotted by:Lisa, Drawing Path: N:\15117 Westlake and A Frame\Drawings\Plan Set\Westlake\Drawing Name:W Foothills PnP.dwg

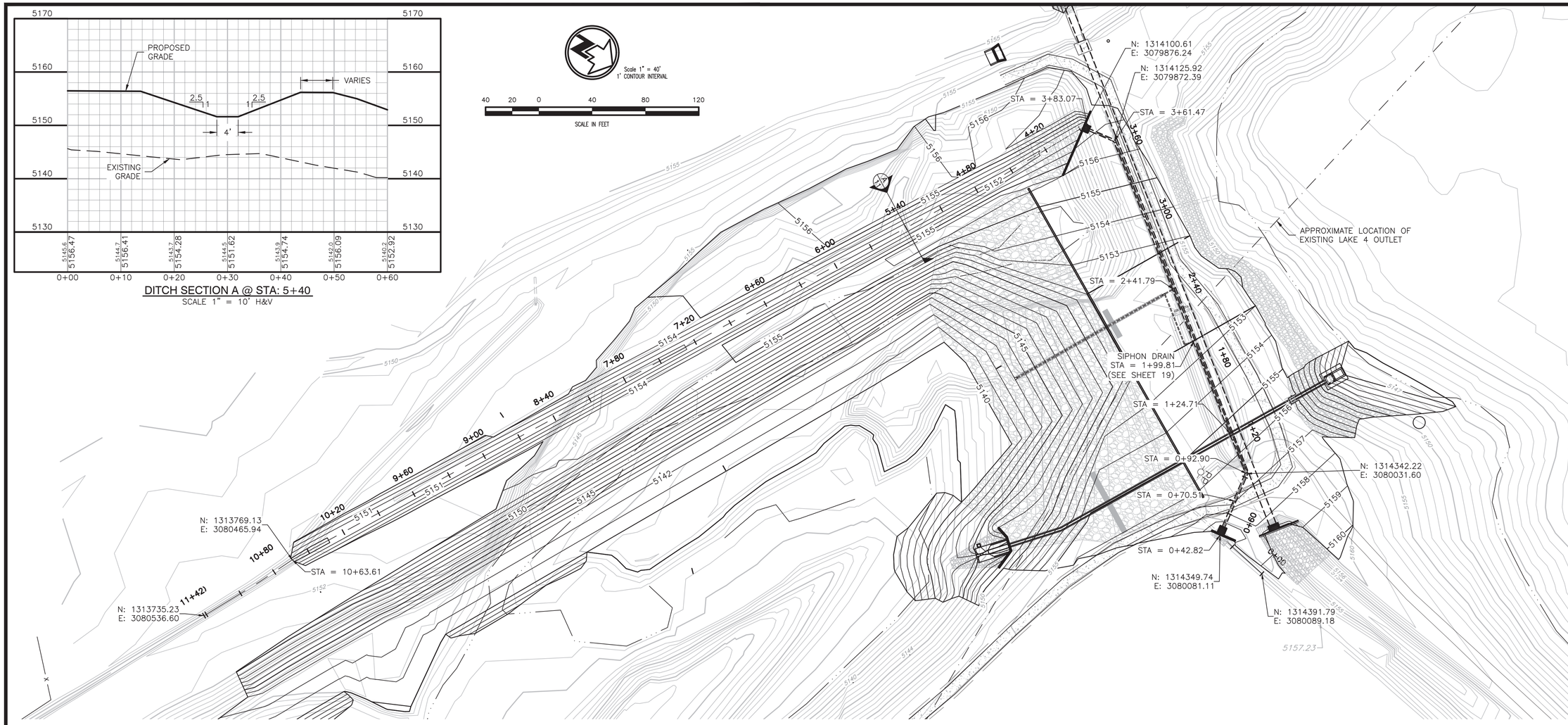

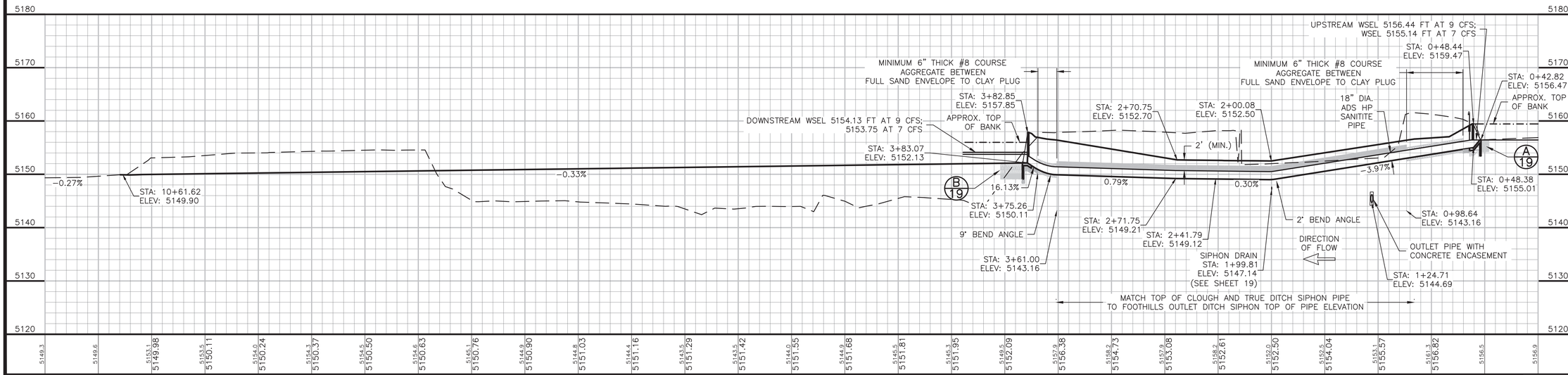

Applegate Group, Inc.
Water Resource Advisors for the West
1490 West 121st Ave., Suite 100
Denver, CO 80234
(303) 452-6611
Fax: (303) 452-2759
email: info@applegategroup.com Website: www.applegategroup.com

CLOUGH AND TRUE DITCH PLAN AND PROFILE

BOULDER COUNTY
WEST LAKE DAM REHABILITATION

NO	DATE	BY	CHK'D	DESCRIPTION
8	05/JUL/18	LLD	SS	Issued for Bid
7	18/JAN/18	LLD	SS	Revised Conc. Channel and Flume
6	26/DEC/17	LLD	SS	SEO Comments
5	19/SEP/17	LLD	SS	SEO Comments on Manhole
4	23/AUG/17	LLD	SS	SEO Comments
3	11/APR/17	LLD	SS	Revised Foothills Siphon Inlet, Added Spillway Overflow Channel

REVISIONS

Date:	JULY 26, 2018
Job No:	15-117
Drawn:	LD
Design:	CH
Checked:	SS
Scale:	1" = 40'H / 1"=5'V

COLORADO LICENSED PROFESSIONAL ENGINEER
STEVEN SMITH
43364
7/26/18

Sheet: 11
Of: 25

Filing No. C-2068

Plot Date: 07/30/18-1:38pm, Plotted by:Luke, Drawing Path: N:\15117 Westlake and A Frame\Drawings\Plan Set\Westlake\Drawing Name:W Clough and True PnP.dwg

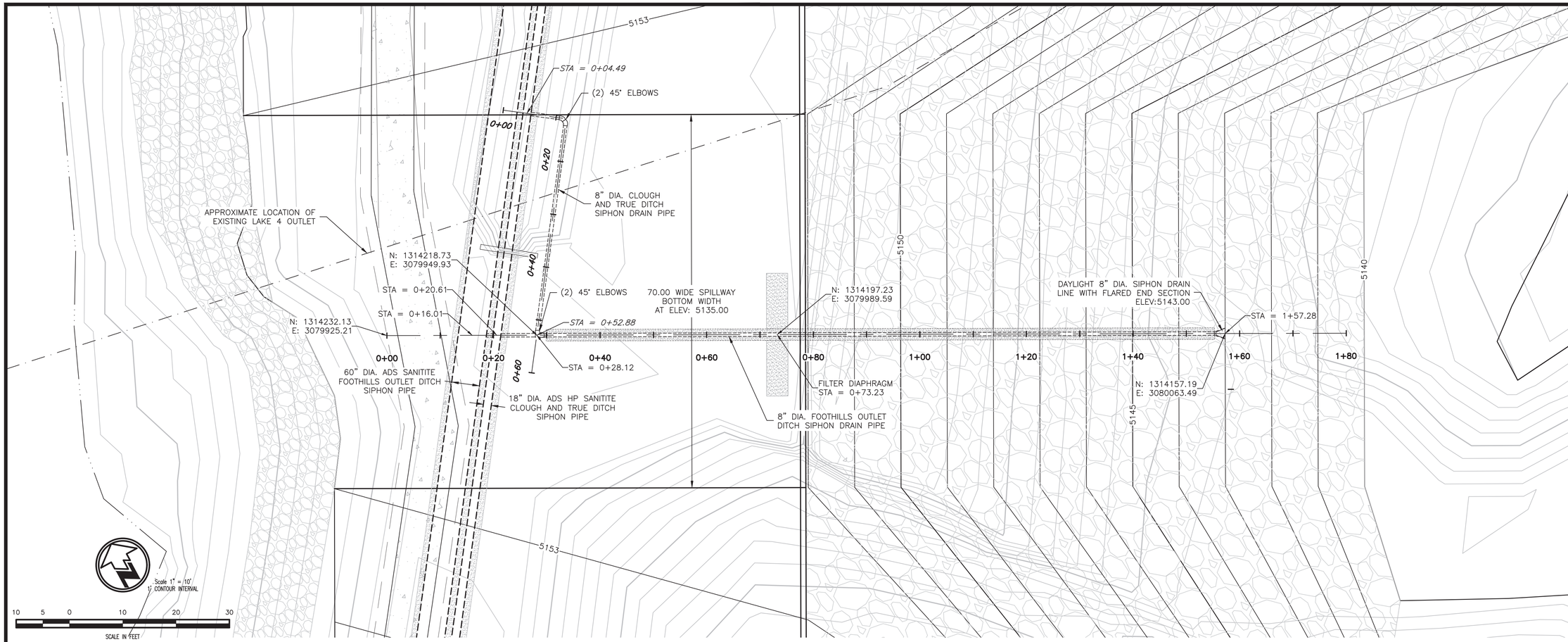

FOOTHILLS OUTLET DITCH SIPHON DRAIN PIPE

SCALE 1" = 10' H&V

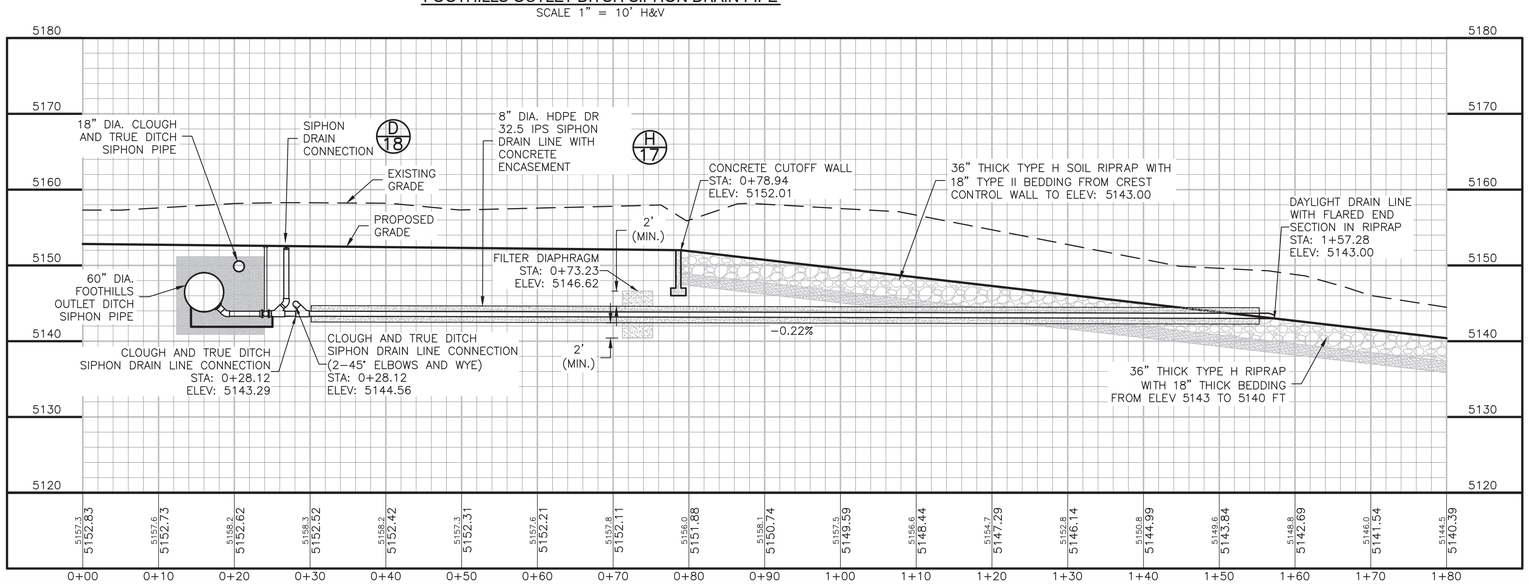

CLOUGH AND TRUE DITCH SIPHON DRAIN PIPE

SCALE 1" = 10' H&V

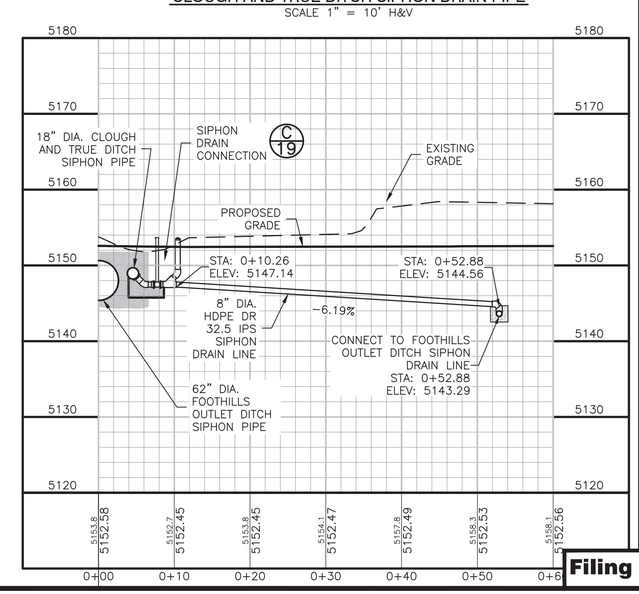

Applegate Group, Inc.
Water Resource Advisors for the West
1490 West 121st Ave., Suite 100
Denver, CO 80234
(303) 452-6611
Fax: (303) 452-2759
email: info@applegategroup.com Website: www.applegategroup.com

SIPHON DRAIN LINE PLAN AND PROFILES

BOULDER COUNTY
WEST LAKE DAM
REHABILITATION

NO	DATE	BY	CHK'D	DESCRIPTION
8	05/JUL/18	LLD	SS	Issued for Bid
7	18/JAN/18	LLD	SS	Revised Conc. Channel and Flume
6	26/DEC/17	LLD	SS	SEO Comments
5	19/SEP/17	LLD	SS	SEO Comments on Manhole
4	23/AUG/17	LLD	SS	SEO Comments
3	11/APR/17	LLD	SS	Revised Foothills Siphon Inlet, Added Spillway Overflow Channel

REVISIONS

Date:	JULY 26, 2018
Job No:	15-117
Drawn:	LD
Design:	CH
Checked:	SS
Scale:	1" = 20'H / 1"=5'V

COLORADO LICENSED STEVEN SMITH 43364 7/26/18 PROFESSIONAL ENGINEER

Sheet: 12 Of: 25

Filing No. C-2068

Plot Date: 07/30/18-1:38pm, Plotted by:Luke, Drawing Path: N:\15117 Westlake and A Frame\Drawings\Plan Set\Westlake\Drawing Name:W Siphon Drain Plan.dwg

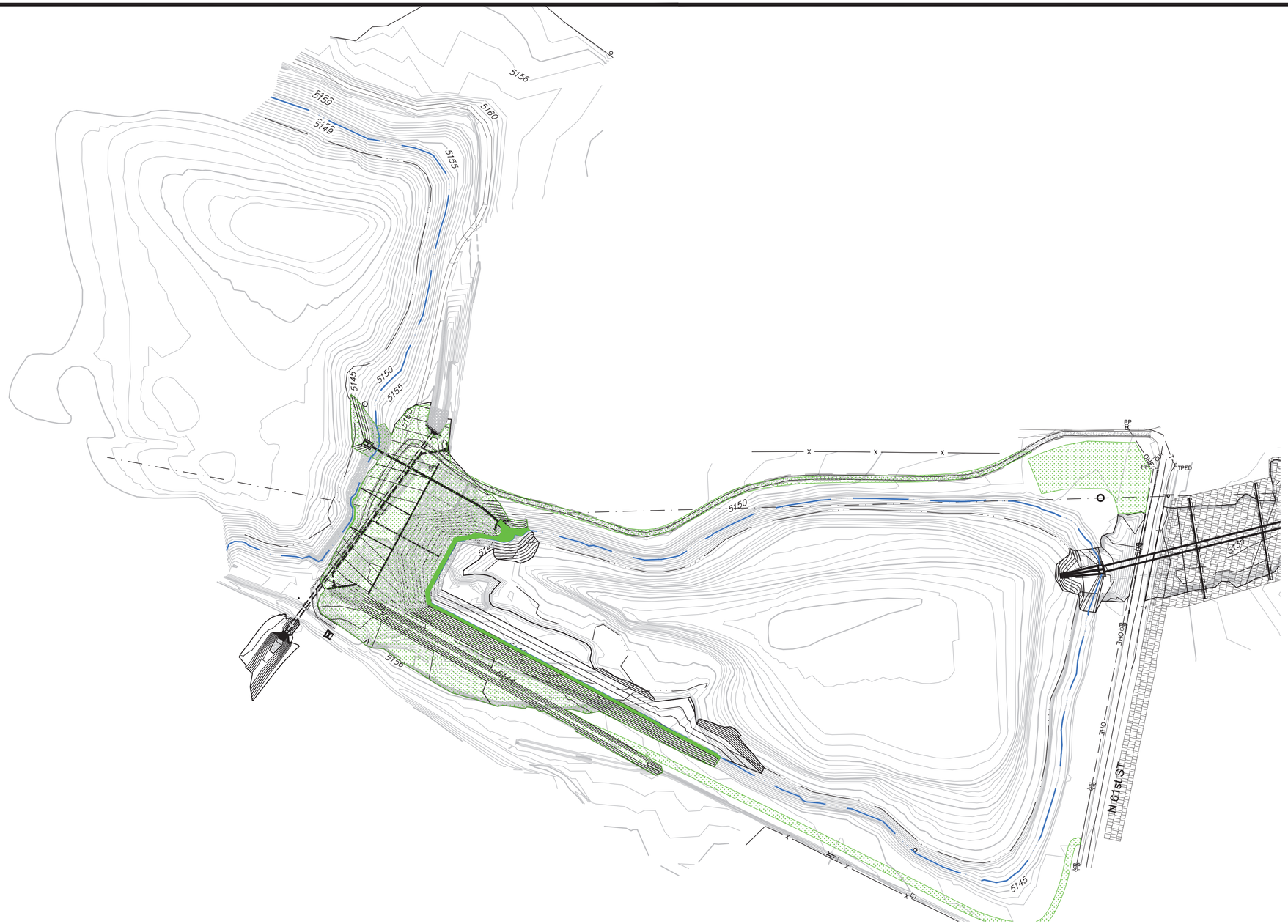

LEGEND:

WETLANDS SEED MIX AREA

UPLANDS SEED MIX AREA

NOTES:

1. WETLANDS SEED MIX FROM ELEV 5152.0 TO ELEV 5153.5.
2. UPLANDS SEED MIX ABOVE ELEV 5153.5.

Scale 1" = 100'
1' CONTOUR INTERVAL

100 50 0 100 200 300
SCALE IN FEET

Applegate Group, Inc.
Water Resource Advisors for the West
1490 West 121st Ave., Suite 100
Denver, CO 80234
(303) 452-6611
Fax: (303) 452-2759
email: info@applegategroup.com Website: www.applegategroup.com

REVEGETATION PLAN

BOULDER COUNTY
WEST LAKE DAM
REHABILITATION

NO	DATE	BY	CHK'D	DESCRIPTION
8	05/JUL/18	LLD	SS	Issued For Bid
7	18/JAN/18	LLD	SS	Revised Conc. Channel and Flume
6	26/DEC/17	LLD	SS	SEO Comments
5	19/SEP/17	LLD	SS	SEO Comments on Manhole
4	23/AUG/17	LLD	SS	SEO Comments
3	11/APR/17	LLD	SS	Revised Foothills Siphon Inlet, Added Spillway Overflow Channel

REVISIONS

Date:	JULY 26, 2018
Job No:	15-117
Drawn:	LD
Design:	CH
Checked:	SS
Scale:	1" = 100'

COLORADO LICENSED
STEVEN SMITH
43364
7/26/18
PROFESSIONAL ENGINEER

Sheet: 13 Of: 25

Filing No. C-2068

Plot Date: 07/30/18-1:35pm, Plotted by:Luke, Drawing Path: N:\15117 Westlake and A Frame\Drawings\Plan Set\Westlake\Drawing Name\W Revegetation.dwg

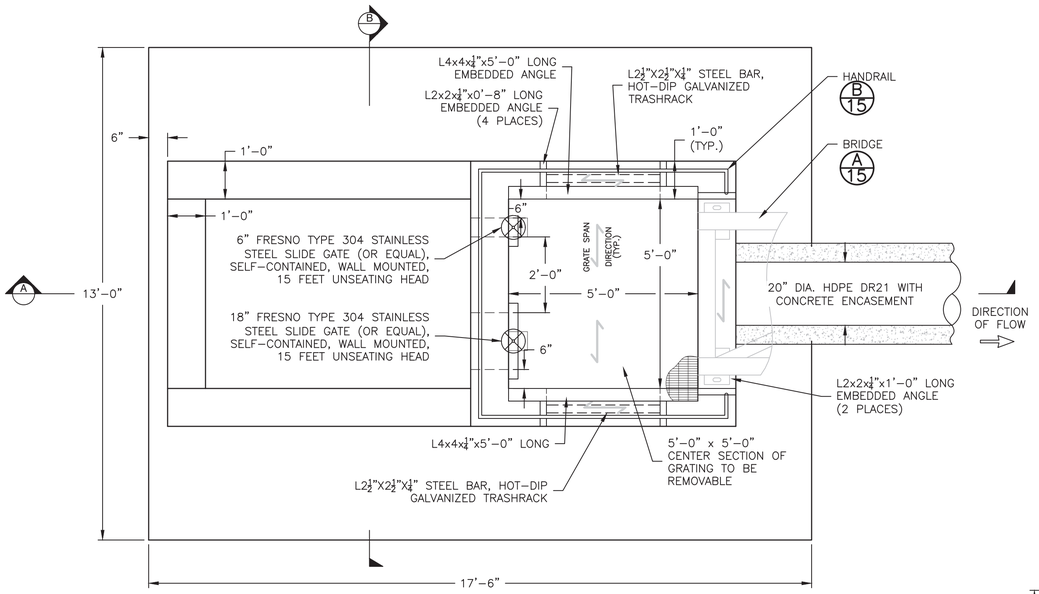

PLAN VIEW

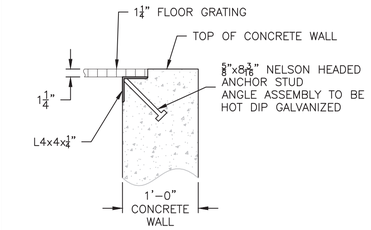

SECTION C
SCALE 1" = 1'

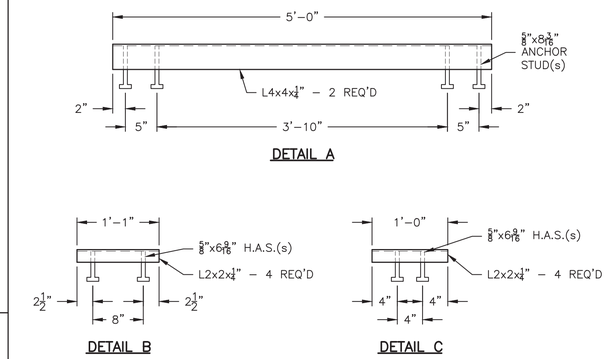

EMBEDDED ANGLES
SCALE 1" = 1'

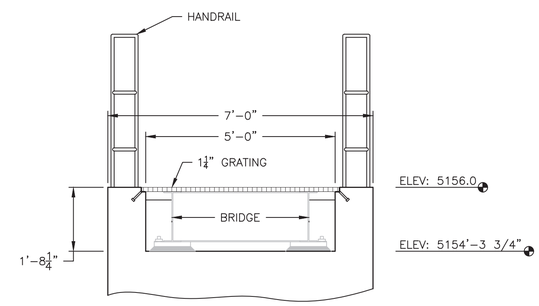

SECTION E

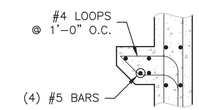

CORBEL DETAIL

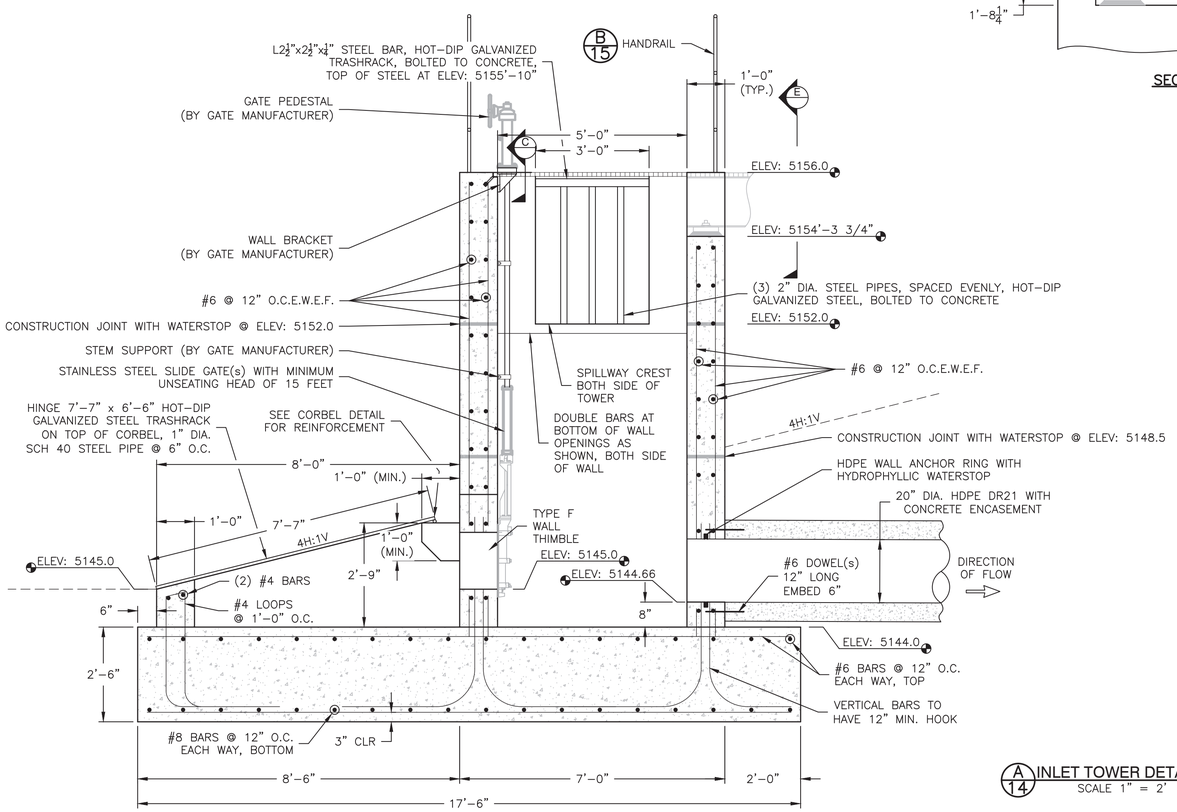

SECTION A

A 14 INLET TOWER DETAILS
SCALE 1" = 2'

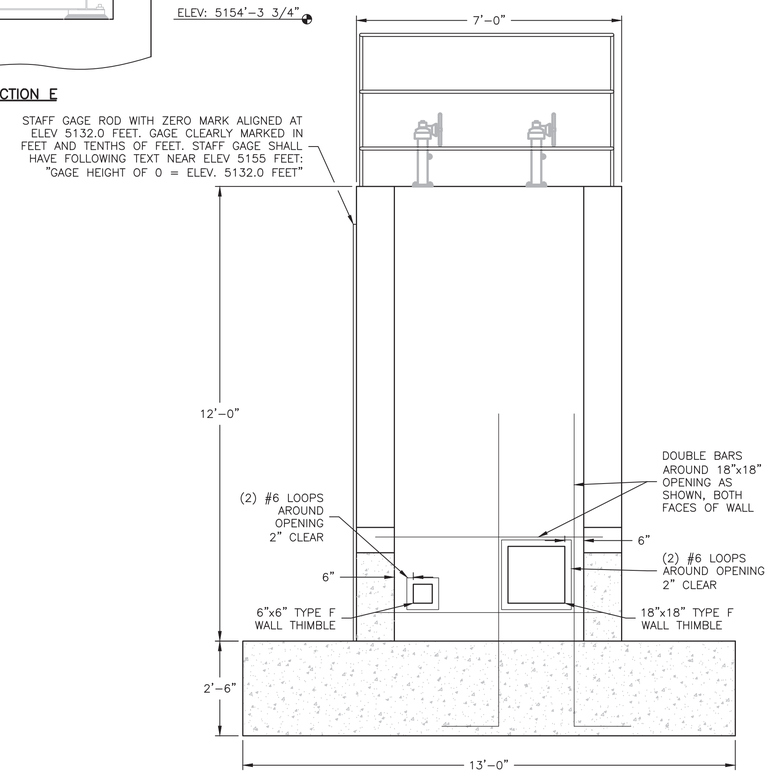

*SLIDE GATES NOT SHOWN

SECTION B

Applegate Group, Inc.
Water Resource Advisors for the West
1490 West 121st Ave., Suite 100
Denver, CO 80234
(303) 452-6611
Fax: (303) 452-2759
email: info@applegategroup.com Website: www.applegategroup.com

OUTLET TOWER DETAILS

BOULDER COUNTY
WEST LAKE DAM
REHABILITATION

NO	DATE	BY	CHK'D	DESCRIPTION
8	05/JUL/18	LLD	SS	Issued for Bid
7	18/JAN/18	LLD	SS	Revised Conc. Channel and Flume
6	26/DEC/17	LLD	SS	SEO Comments
5	19/SEP/17	LLD	SS	SEO Comments on Manhole
4	23/AUG/17	LLD	SS	SEO Comments
3	11/APR/17	LLD	SS	Revised Facility Siphon Inlet, Added Spillway Overflow Channel

REVISIONS

Date:	JULY 26, 2018
Job No:	15-117
Drawn:	LD
Design:	CH
Checked:	SS
Scale:	As Noted

COLORADO LICENSED
STEVEN SMITH
43364
7/26/18
PROFESSIONAL ENGINEER

Sheet: 14
Of: 25

Filing No. C-2068

Plot Date: 07/30/18-1:39pm, Plotted by:jude, Drawing Path: N:\15117 Westlake and A Frame\Drawings\Plan Set\Westlake\Drawing Name:W Details.dwg

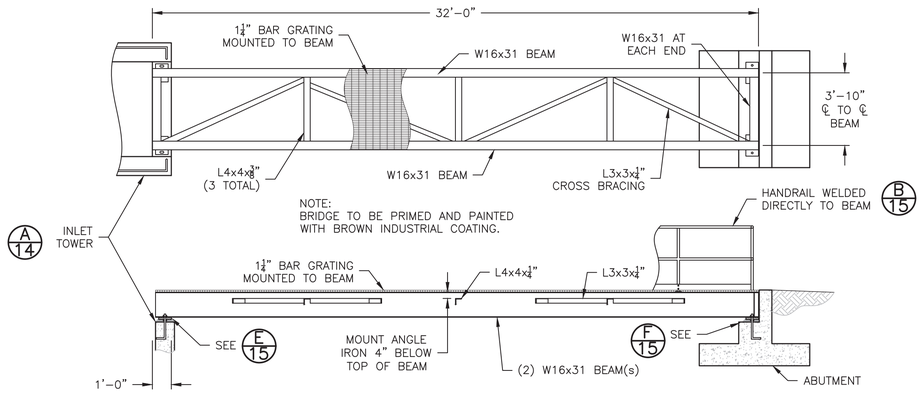

A 15 TOWER BRIDGE
SCALE 1" = 4'

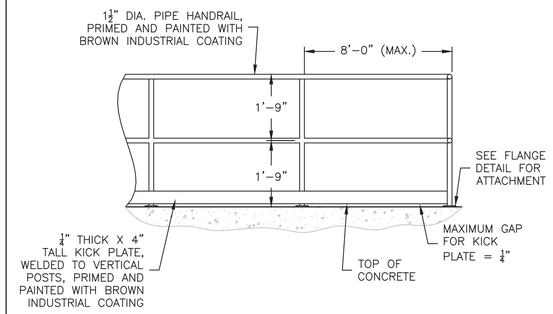

B 15 TYPICAL HANDRAIL DETAIL
SCALE 1" = 2'

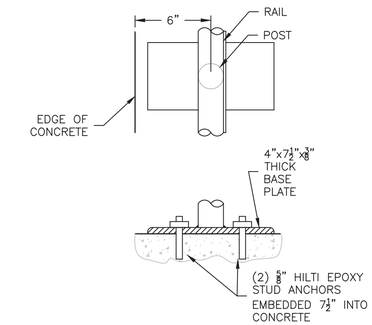

C 15 TYPICAL HANDRAIL ATTACHMENT TO CONCRETE
NOT TO SCALE

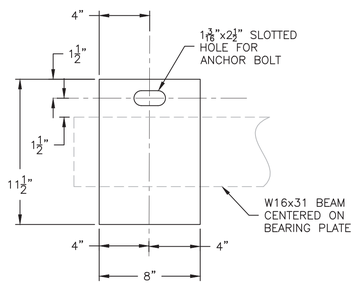

BEARING PLATE DETAIL

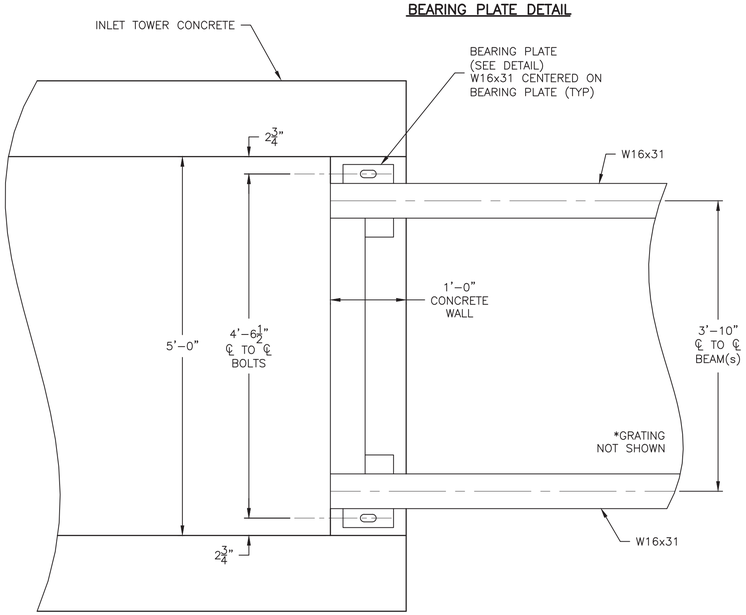

PLAN VIEW

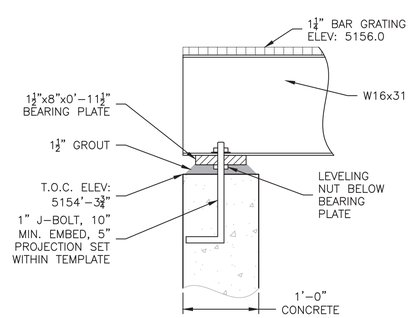

ELEVATION VIEW

E 15 BRIDGE TO TOWER ATTACHMENT DETAIL
SCALE 1" = 1'

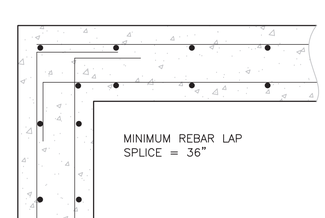

D 15 REBAR CORNER DETAIL - TYP.
SCALE 1" = 1'

Applegate Group, Inc.
Water Resource Advisors for the West
1490 West 121st Ave., Suite 100
Denver, CO 80234
(303) 452-6611
Fax: (303) 452-2759
email: info@applegategroup.com Website: www.applegategroup.com

OUTLET TOWER DETAILS

BOULDER COUNTY
WEST LAKE DAM
REHABILITATION

NO	DATE	BY	CHK'D	DESCRIPTION
8	05/JUL/18	LLD	SS	Issued for Bid
7	18/JUN/18	LLD	SS	Revised Conc. Channel and Flume
6	26/DEC/17	LLD	SS	SEO Comments
5	19/SEP/17	LLD	SS	SEO Comments on Manhole
4	23/AUG/17	LLD	SS	SEO Comments
3	11/APR/17	LLD	SS	Revised Foothills Siphon Inlet, Added Spillway Overflow Channel

REVISIONS

Date:	JULY 26, 2018
Job No:	15-117
Drawn:	LD
Design:	CH
Checked:	SS
Scale:	As Noted

COLORADO LICENSED STEVEN SMITH 43364 7/26/18 PROFESSIONAL ENGINEER

Sheet: 15 Of: 25

Filing No. C-2068

Plot Date: 07/30/18-1:39pm, Plotted by:Luke, Drawing Path: N:\15117 Westlake and A Frame\Drawings\Plan Set\Westlake\Drawing Name\W Details.dwg

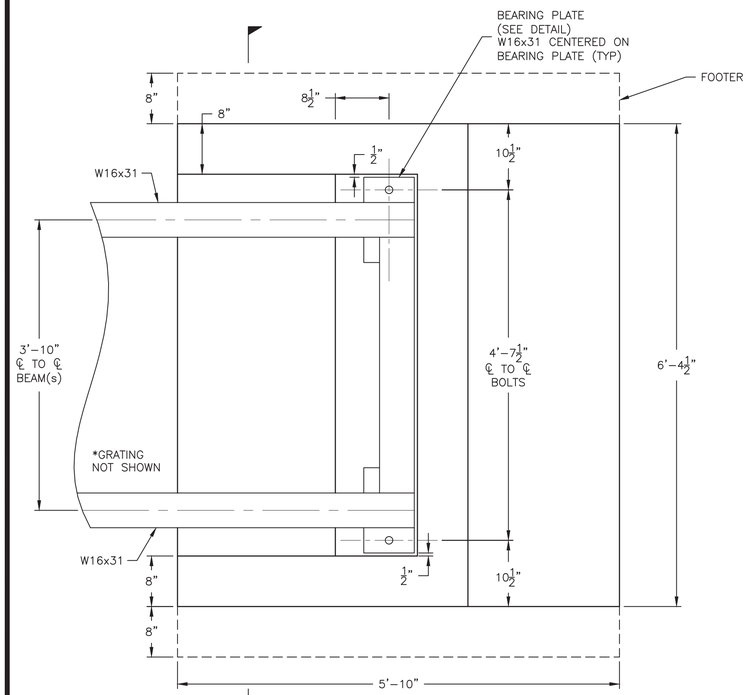

PLAN VIEW

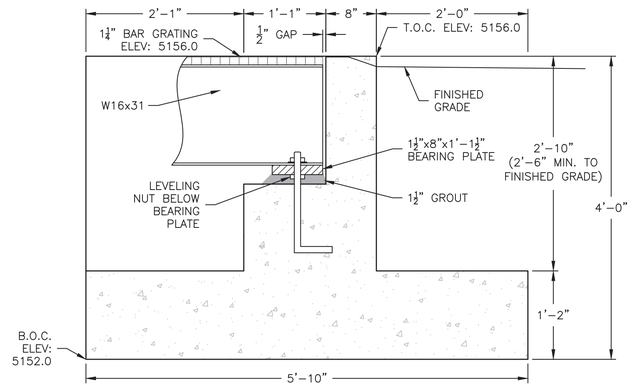

ELEVATION VIEW

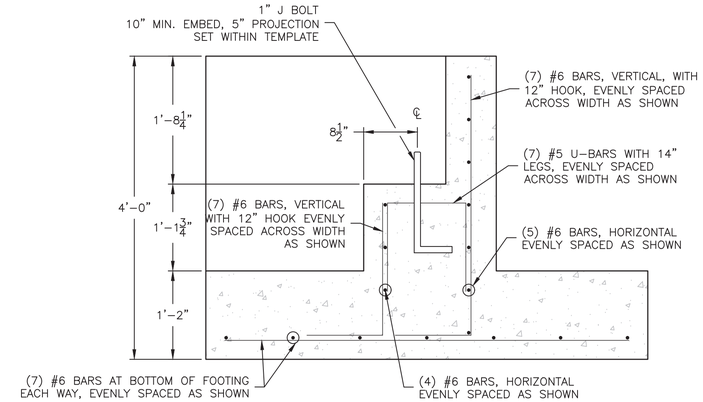

REBAR LAYOUT ELEVATION VIEW

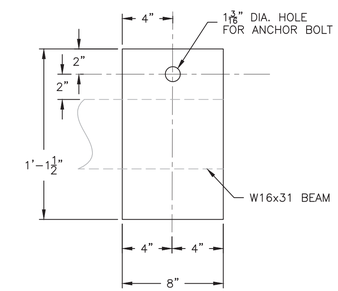

BEARING PLATE DETAIL

F/16 BRIDGE TO ABUTMENT ATTACHMENT DETAIL
SCALE 1" = 1'

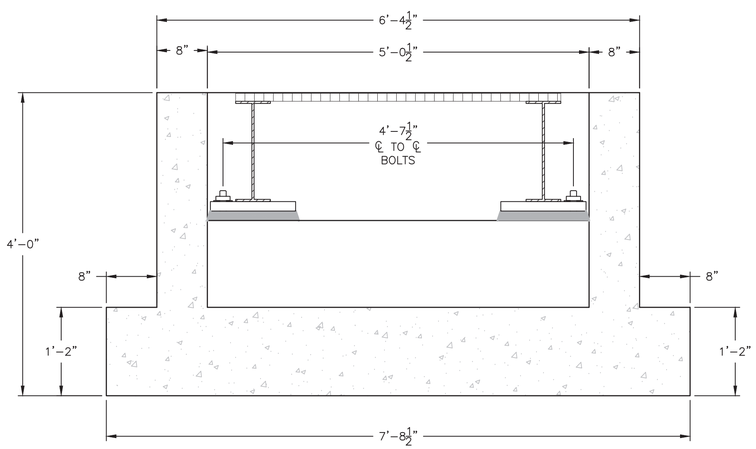

SECTION A

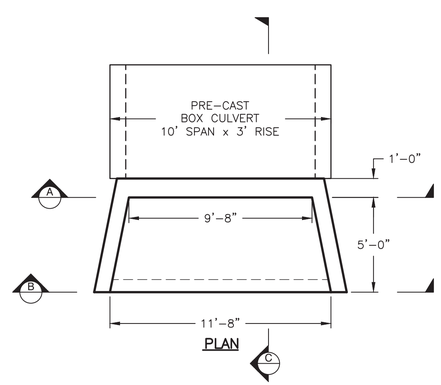

PLAN

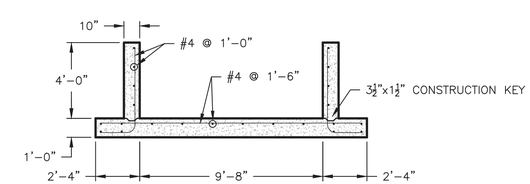

SECTION A

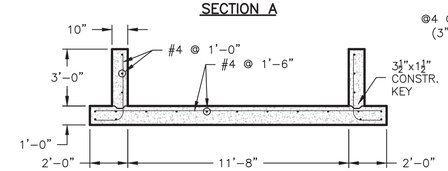

SECTION B

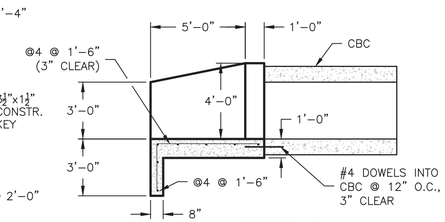

SECTION C

G/16 SOUTH BRANCH DITCH CROSSING STRUCTURE
SCALE 1" = 4'

Applegate Group, Inc.
Water Resource Advisors for the West
1490 West 121st Ave., Suite 100
Denver, CO 80234
(303) 452-6611
Fax: (303) 452-2759
email: info@applegategroup.com Website: www.applegategroup.com

DETAILS

BOULDER COUNTY
WEST LAKE DAM
REHABILITATION

NO	DATE	BY	CHK'D	DESCRIPTION
8	05/JUL/18	LLD	SS	Issued for Bid
7	18/JAN/18	LLD	SS	Revised Conc. Channel and Flume
6	26/DEC/17	LLD	SS	SEO Comments
5	19/SEP/17	LLD	SS	SEO Comments on Manhole
4	23/AUG/17	LLD	SS	SEO Comments
3	11/APR/17	LLD	SS	Revised Foothills Siphon Inlet, Added Spillway Overflow Channel

REVISIONS

Date:	JULY 26, 2018
Job No:	15-117
Drawn:	LD
Design:	CH
Checked:	SS
Scale:	As Noted

COLORADO LICENSED
STEVEN SMITH
43364
7/26/18
PROFESSIONAL ENGINEER

Sheet: 16 Of: 25

Filing No. C-2068

Plot Date: 07/30/18-1:39pm, Plotted by:Luke, Drawing Path: N:\15117 Westlake and A Frame\Drawings\Plan Set\Westlake\Drawing Name:W Details.dwg

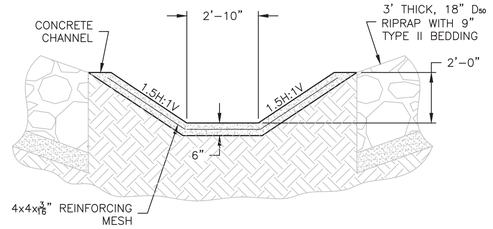

A/17 CONCRETE LINED TRAPEZOIDAL CHANNEL
SCALE 1" = 3'

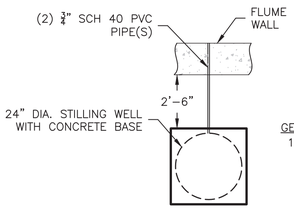

PLAN

GENERAL NOTES:
1. 3/4" DIA. SCH 40 PVC PIPE SHALL BE SEALED AT BOTH FLUME WALL AND STILLING WELL, LOCATED AT THE FLUME INVERT AND 3" ABOVE INVERT.
2. STILLING WELL SHALL EXTEND 3' ABOVE TOP OF GROUND SURFACE.

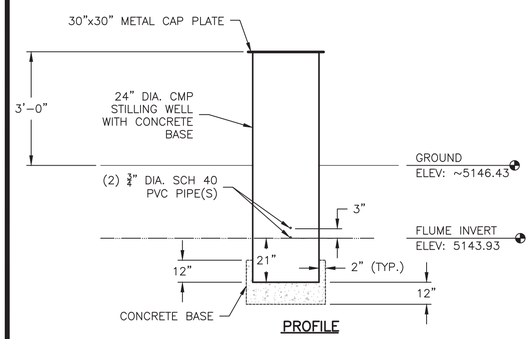

PROFILE

E/17 STILLING WELL DETAILS
NOT TO SCALE

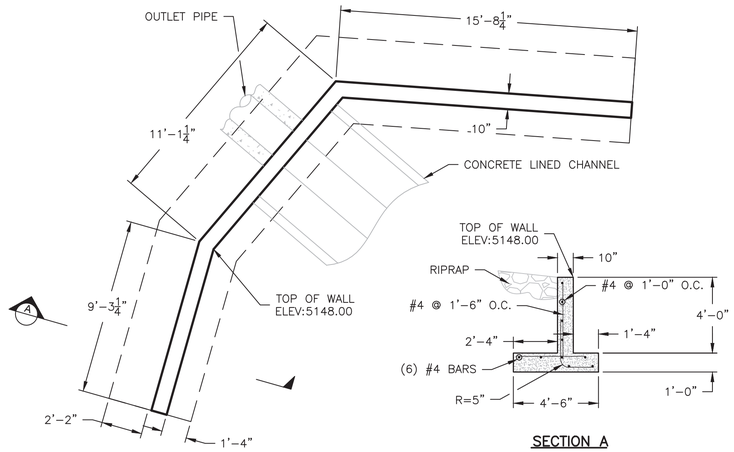

SECTION A

B/17 OUTLET PIPE HEADWALL
SCALE 1" = 4'

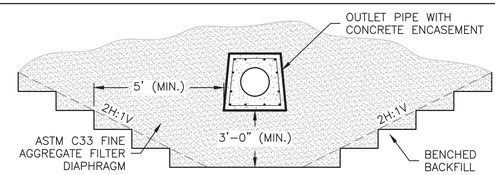

G/17 OUTLET FILTER DIAPHRAGM DETAIL
SCALE 1" = 4'

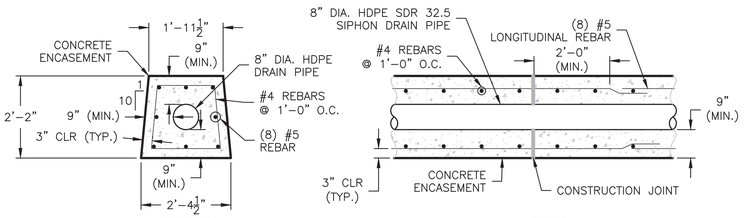

SECTION PLAN

H/17 SIPHON DRAIN PIPE ENCASEMENT
SCALE 1" = 4'

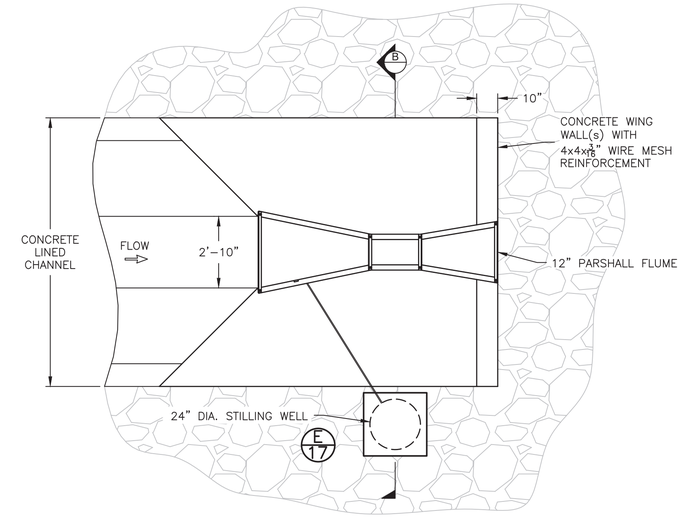

PLAN

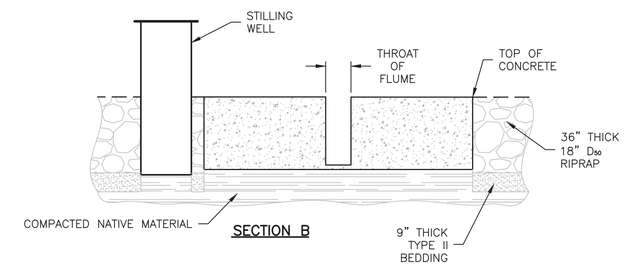

SECTION B

NOTE:
CONCRETE WINGWALL TO EXTEND 1'-0" BELOW FLUME INVERT.

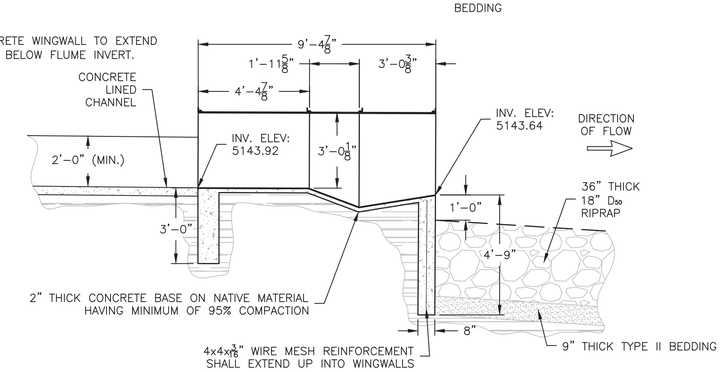

PROFILE

C/17 FLUME DETAIL
SCALE 1" = 3'

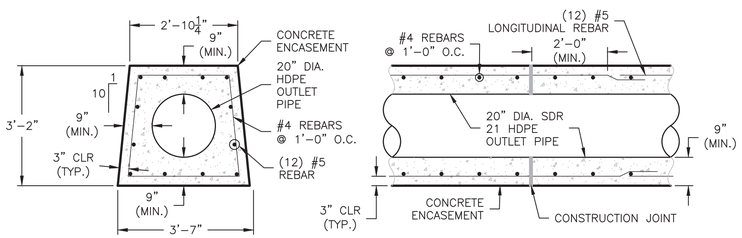

SECTION PLAN

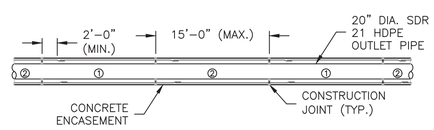

NOTE:
1. CONCRETE ENCASEMENT SHALL BE CAST IN 15FT SECTIONS ALTERNATING AS SHOWN WITH #1 SECTIONS CAST FIRST, FOLLOWED BY #2 SECTIONS.
2. CONTRACTOR SHALL ENSURE PIPE DOES NOT FLOAT DURING CONCRETE PLACEMENT.

SEQUENCING
NOT TO SCALE

D/17 OUTLET PIPE CONCRETE ENCASEMENT
SCALE 1" = 2'

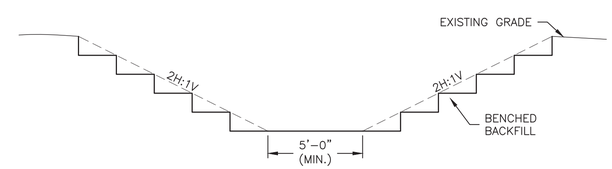

F/17 MINIMUM EXCAVATION SECTION FOR OUTLET PIPE
SCALE 1" = 4'

Applegate Group, Inc.
Water Resource Advisors for the West
1490 West 121st Ave., Suite 100
Denver, CO 80234
(303) 452-6611
Fax: (303) 452-2759
email: info@applegategroup.com Website: www.applegategroup.com

DETAILS

BOULDER COUNTY
WEST LAKE DAM
REHABILITATION

NO	DATE	BY	CHK'D	DESCRIPTION
8	05/JUL/18	LLD	SS	Issued for Bid
7	18/JAN/18	LLD	SS	Revised Conc. Channel and Flume
6	26/DEC/17	LLD	SS	SEO Comments
5	19/SEP/17	LLD	SS	SEO Comments on Manhole
4	23/AUG/17	LLD	SS	Revised Toothbile Siphon Inlet, Added Spillway Downflow Channel
3	11/APR/17	LLD	SS	

REVISIONS

Date:	JULY 26, 2018
Job No:	15-117
Drawn:	LD
Design:	CH
Checked:	SS
Scale:	As Noted

COLORADO LICENSED STEVEN SMITH 43364 7/26/18 PROFESSIONAL ENGINEER

Sheet: 17
Of: 25

Filing No. C-2068

Plot Date: 07/30/18-1:39pm, Plotted by:Luke, Drawing Path: N:\15117 Westlake and A Frame\Drawings\Plan Set\Westlake\Drawing Name:W Details.dwg

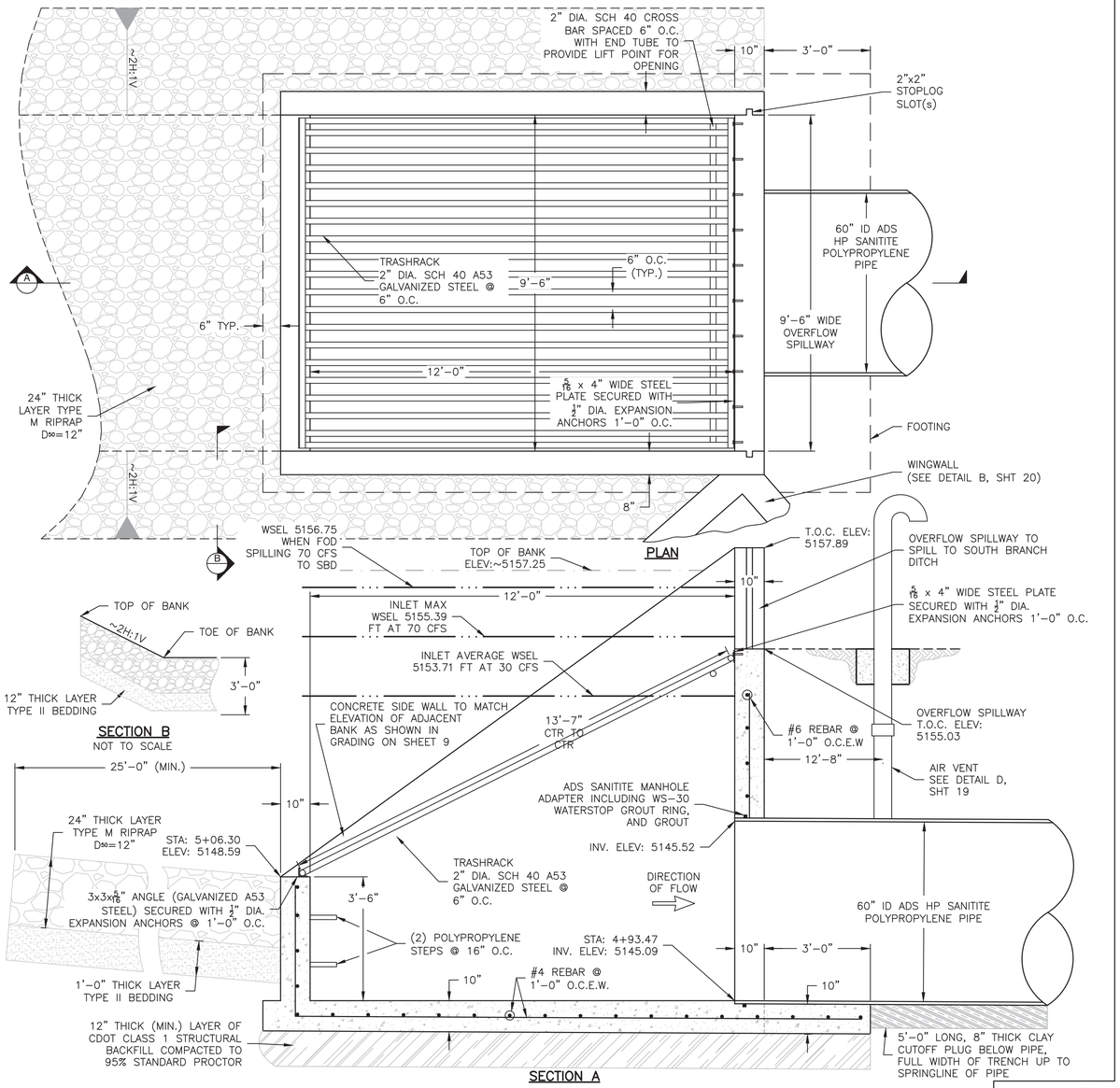

A/18 FOOTHILLS SIPHON INLET STRUCTURE
SCALE 1" = 2'

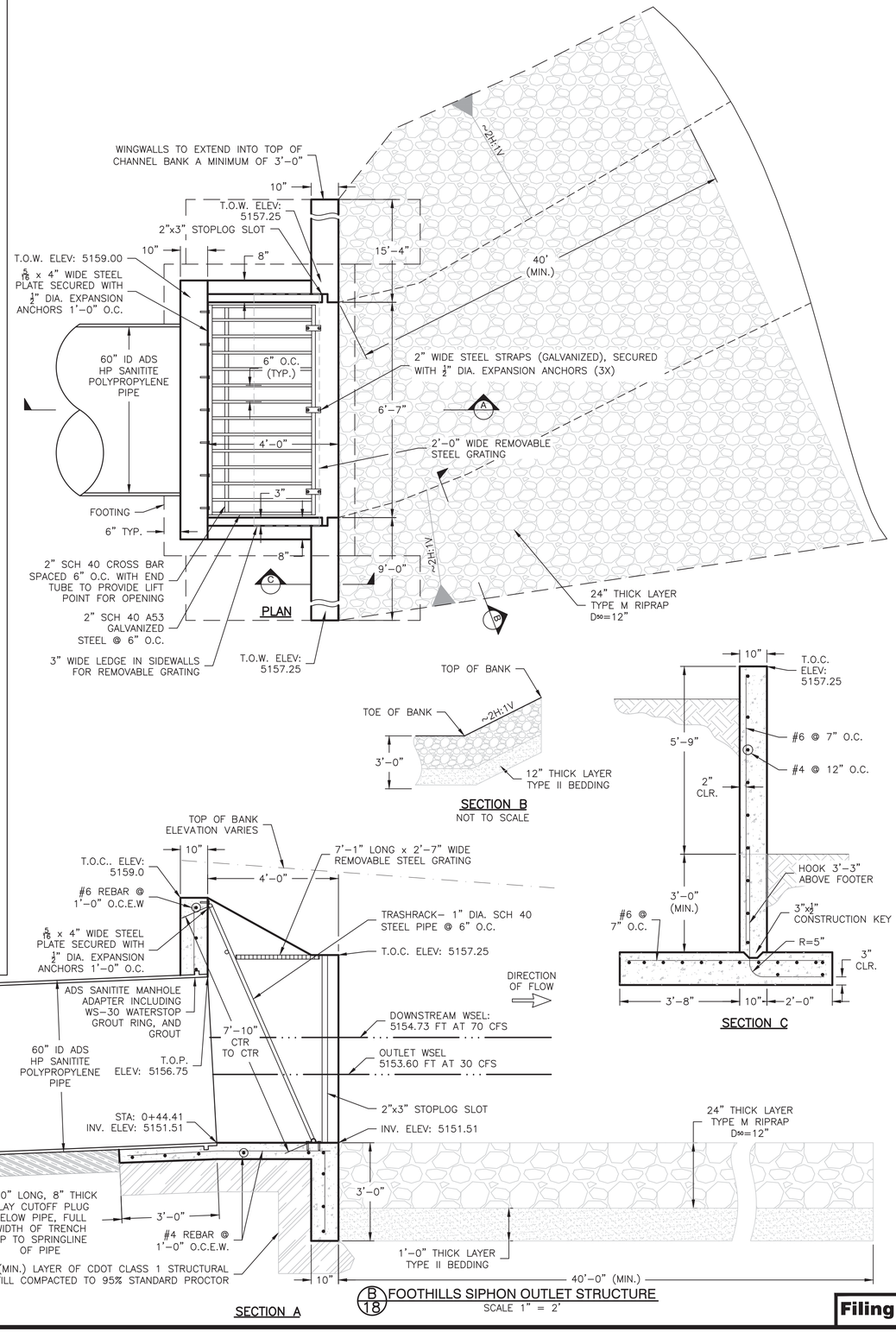

B/18 FOOTHILLS SIPHON OUTLET STRUCTURE
SCALE 1" = 2'

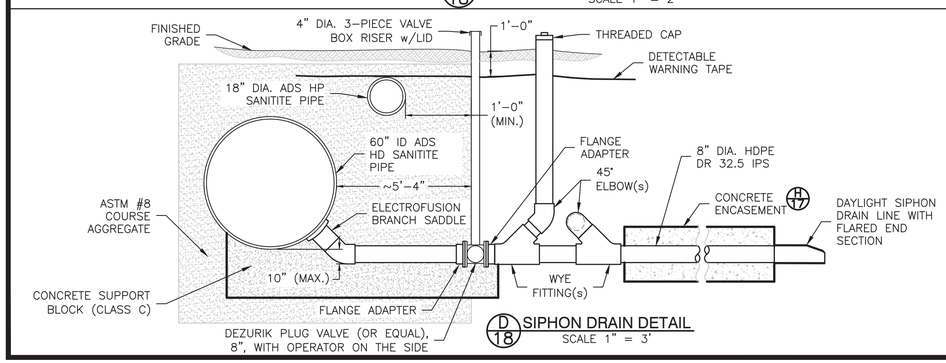

D/18 SIPHON DRAIN DETAIL
SCALE 1" = 3'

Applegate Group, Inc.
Water Resource Advisors for the West
1490 West 121st Ave., Suite 100
Denver, CO 80234
(303) 452-6611
Fax: (303) 452-2759
email: info@applegategroup.com Website: www.applegategroup.com

FOOTHILLS OUTLET DITCH SIPHON DETAILS

BOULDER COUNTY
WEST LAKE DAM REHABILITATION

REVISIONS

NO	DATE	BY	CHK'D	DESCRIPTION
8	05/JUL/18	LLD	SS	Issued for Bid
7	18/JAN/18	LLD	SS	Revised Cross, Channel and Plume
6	26/DEC/17	LLD	SS	SSD Comments
5	19/SEP/17	LLD	SS	SSD Comments on Manhole
4	23/AUG/17	LLD	SS	SSD Comments
3	11/APR/17	LLD	SS	Revised Foothills Siphon Inlet, Added Spillway Overflow Channel

Date:	JULY 26, 2018
Job No:	15-117
Drawn:	LD
Design:	CH
Checked:	SS
Scale:	As Noted

COLORADO LICENSED STEVEN SMITH 43364 7/26/18 PROFESSIONAL ENGINEER

Sheet: 18
Of: 25

Filing No. C-2068

Plot Date: 07/30/18-1:39pm, Plotted by:Luke, Drawing Path: N:\15117 Westlake and A Frame\Drawings\Plan Set\Westlake\Drawing Name\W Debolacdwg

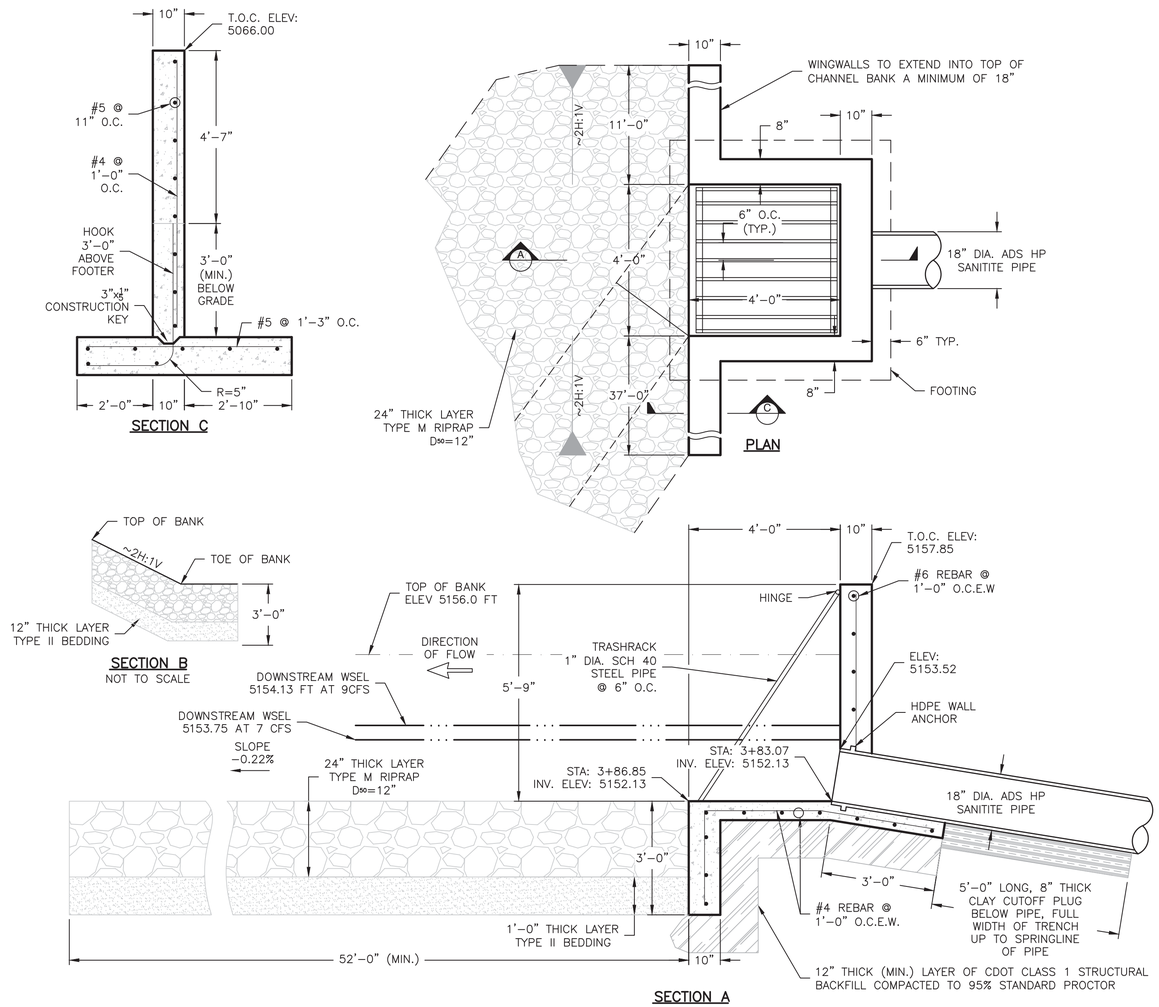

B 19 SIPHON OUTLET STRUCTURE
SCALE 1" = 2'

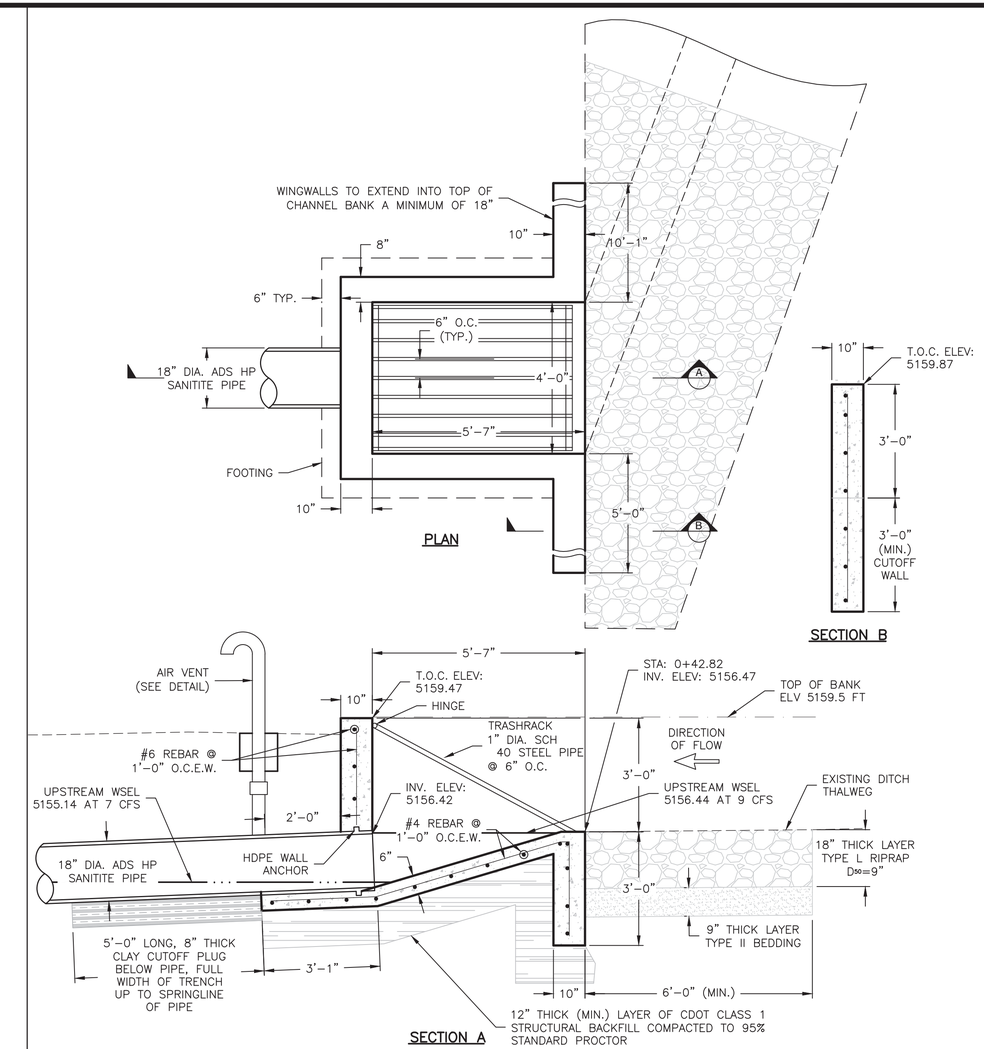

A 19 SIPHON INLET STRUCTURE
SCALE 1" = 2'

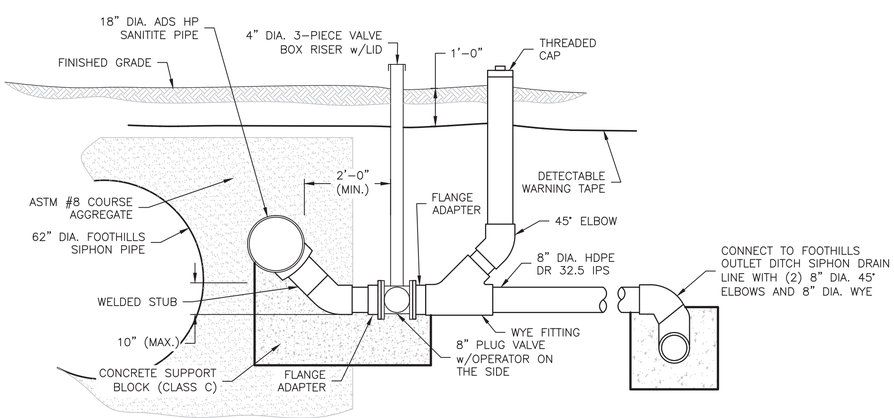

C 19 SIPHON DRAIN DETAIL
SCALE 1" = 2'

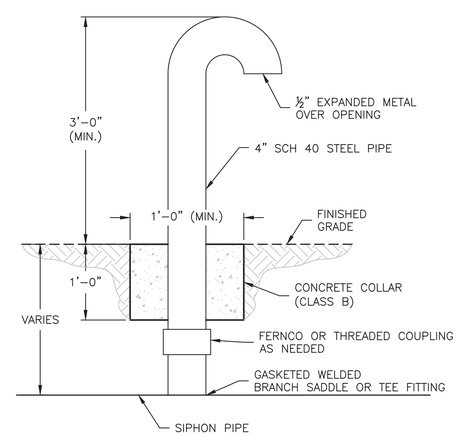

D 19 SIPHON AIR VENT DETAIL
SCALE 1" = 1'

Applegate Group, Inc.
Water Resource Advisors for the West
1490 West 121st Ave., Suite 100
Denver, CO 80234
(303) 452-6611
Fax: (303) 452-2759
email: info@applegategroup.com Website: www.applegategroup.com

CLOUGH AND TRUE SIPHON DETAILS

BOULDER COUNTY
WEST LAKE DAM REHABILITATION

NO	DATE	BY	CHK'D	DESCRIPTION
8	05/JUL/18	LLD	SS	Issued for Bid
7	18/JAN/18	LLD	SS	Revised Conc. Channel and Flume
6	26/DEC/17	LLD	SS	SEO Comments
5	19/SEP/17	LLD	SS	SEO Comments on Manhole
4	23/AUG/17	LLD	SS	SEO Comments
3	11/APR/17	LLD	SS	Revised Foothills Siphon Inlet, Added Spillway Overflow Channel

REVISIONS

Date:	JULY 26, 2018
Job No:	15-117
Drawn:	LD
Design:	CH
Checked:	SS
Scale:	As Noted

COLORADO LICENSED STEVEN SMITH 43364 7/26/18 PROFESSIONAL ENGINEER

Sheet: 19
Of: 25

Filing No. C-2068

Plot Date: 07/30/18-1:39pm, Plotted by:Luke, Drawing Path: N:\15117 Westlake\Drawings\Plan Set\Westlake\Drawing Name:W C&T Details.dwg

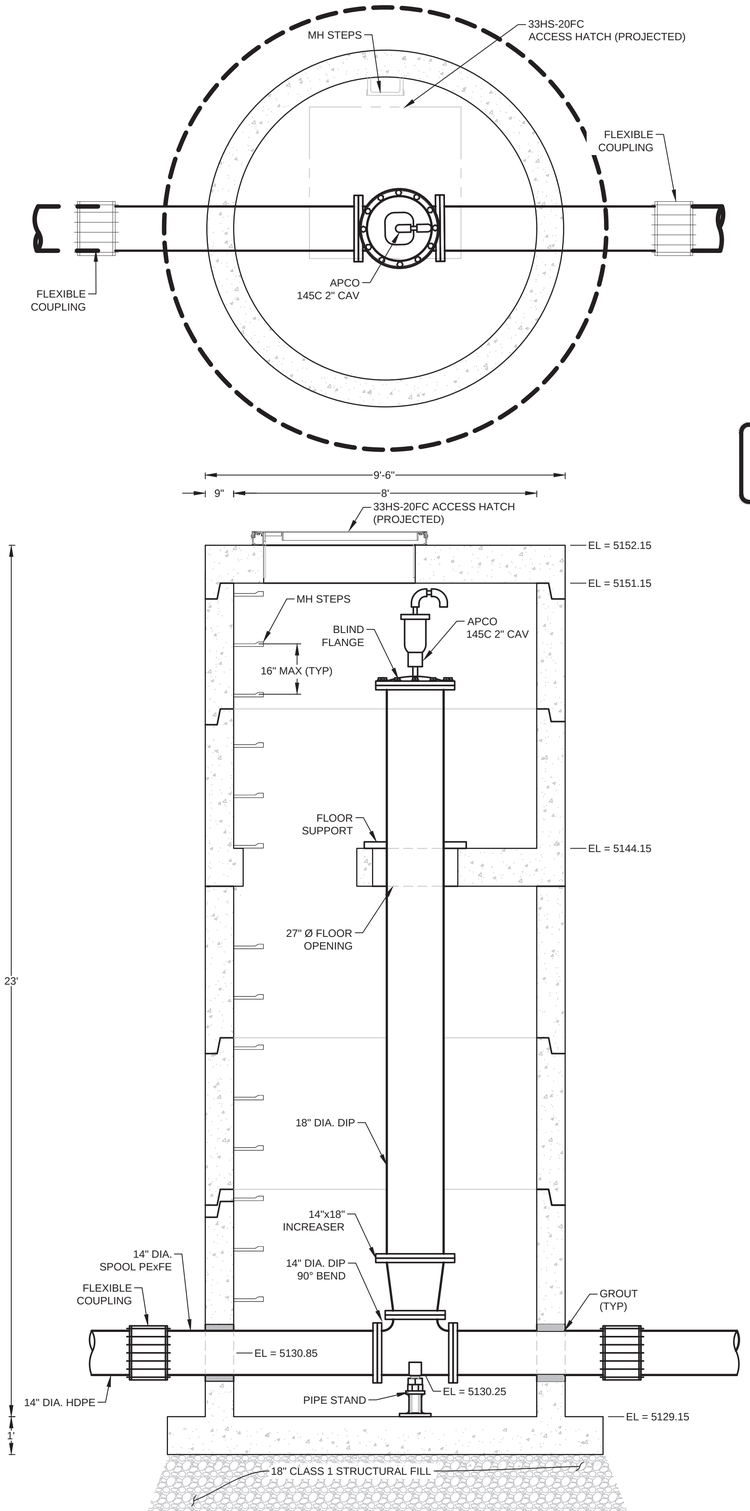

NOT IN CONTRACT

A/20 ACCESS MANHOLE 1 SECTION VIEW
SCALE 1" = 2'

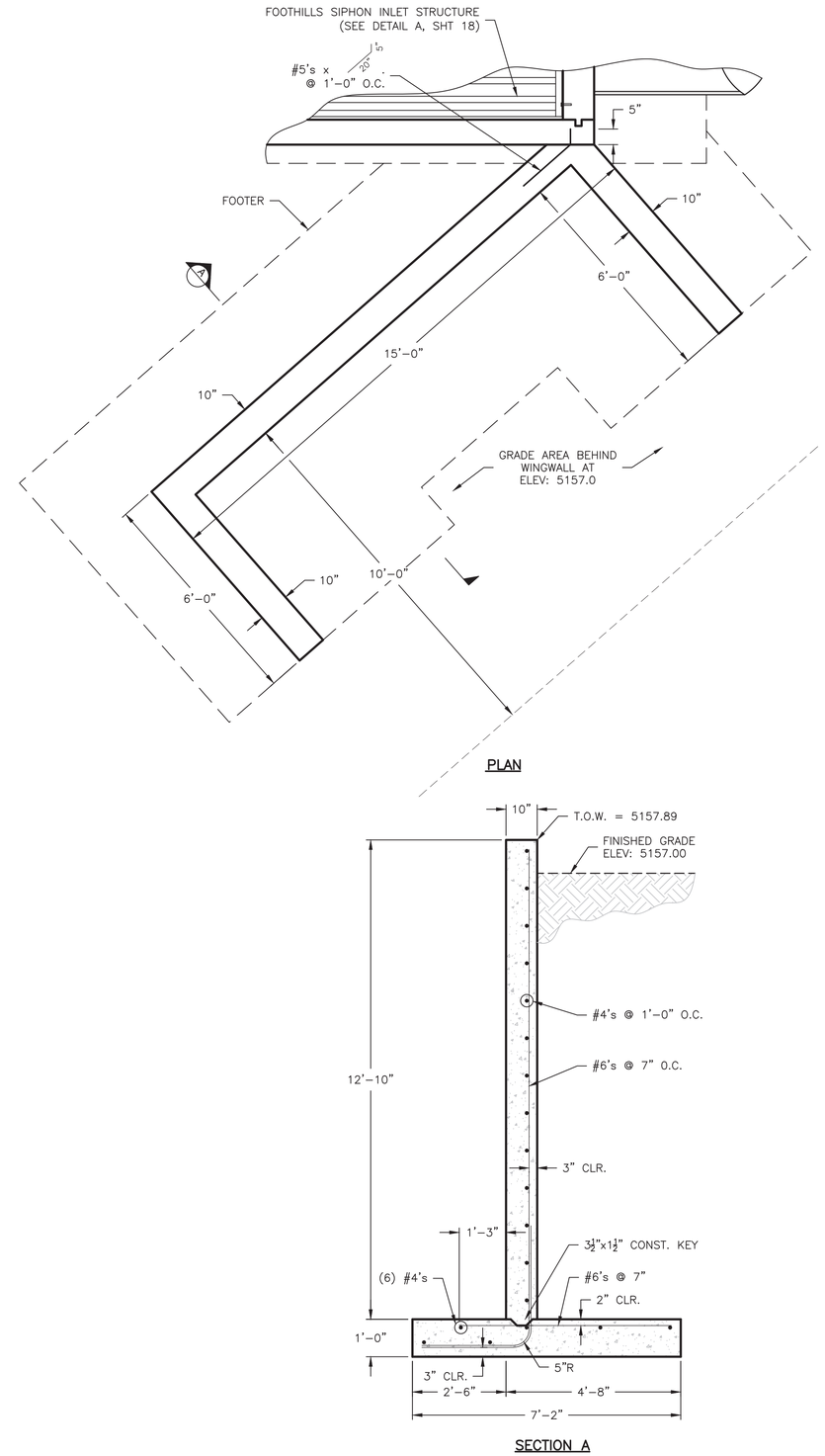

B/20 FOOTHILLS SIPHON INLET STRUCTURE WINGWALL
SCALE 1" = 2

Applegate Group, Inc.
Water Resource Advisors for the West
1490 West 121st Ave., Suite 100
Denver, CO 80234
(303) 452-6611
Fax: (303) 452-2759
email: info@applegategroup.com Website: www.applegategroup.com

LAKE 4 PIPELINE MANHOLE DETAILS

BOULDER COUNTY
WEST LAKE DAM
REHABILITATION

NO	DATE	BY	CHK'D	DESCRIPTION
8	05/JUL/18	LLD	SS	Issued for Bid
7	18/JAN/18	LLD	SS	Revised Conc. Channel and Flume
6	26/DEC/17	LLD	SS	SEO Comments
5	19/SEP/17	LLD	SS	SEO Comments on Manhole
4	23/AUG/17	LLD	SS	SEO Comments
3	11/APR/17	LLD	SS	Revised Foothills Siphon Inlet, Added Spillway Overflow Channel

REVISIONS

Date:	JULY 26, 2018
Job No:	15-117
Drawn:	LD
Design:	CH
Checked:	SS
Scale:	As Noted

COLORADO LICENSED
STEVEN SMITH
43364
7/26/18
PROFESSIONAL ENGINEER

Sheet: 20
Of: 25

Filing No. C-2068

Plot Date: 07/30/18-1:39pm, Plotted by:Luke, Drawing Path: N:\15117 Westlake and A Frame\Drawings\Plan Set\Westlake\Drawing Name:W Lake 4 Pipeline Details.dwg

Applegate Group, Inc.
Water Resource Advisors for the West
1490 West 121st Ave., Suite 100
Denver, CO 80234
(303) 452-6611
Fax: (303) 452-2759
email: info@applegategroup.com Website: www.applegategroup.com

BORROW MATERIAL SOURCES AND HAUL ROUTES

BOULDER COUNTY
WEST LAKE DAM REHABILITATION

NO	DATE	BY	CHK'D	DESCRIPTION
8	05/JUL/18	LLD	SS	Issued for Bid
7	18/JAN/18	LLD	SS	Revised Conc. Channel and Flume
6	26/DEC/17	LLD	SS	SEO Comments
5	19/SEP/17	LLD	SS	SEO Comments on Manhole
4	23/AUG/17	LLD	SS	SEO Comments
3	11/APR/17	LLD	SS	Revised Foothills Siphon Inlet, Added Spillway Overflow Channel

REVISIONS

Date:	JULY 26, 2018
Job No:	15-117
Drawn:	LD
Design:	CH
Checked:	SS
Scale:	1" = 100'

COLORADO LICENSED
STEVEN SMITH
43364
7/26/18
PROFESSIONAL ENGINEER

Sheet: 21
Of: 25

Filing No. C-2068

Plot Date: 07/30/18-1:39pm Plotted by:Luke Drawing Path: N:\15117 Westlake and A Frame\Drawings\Plan Set\Westlake\Drawing Name:W Haul Routes.dwg

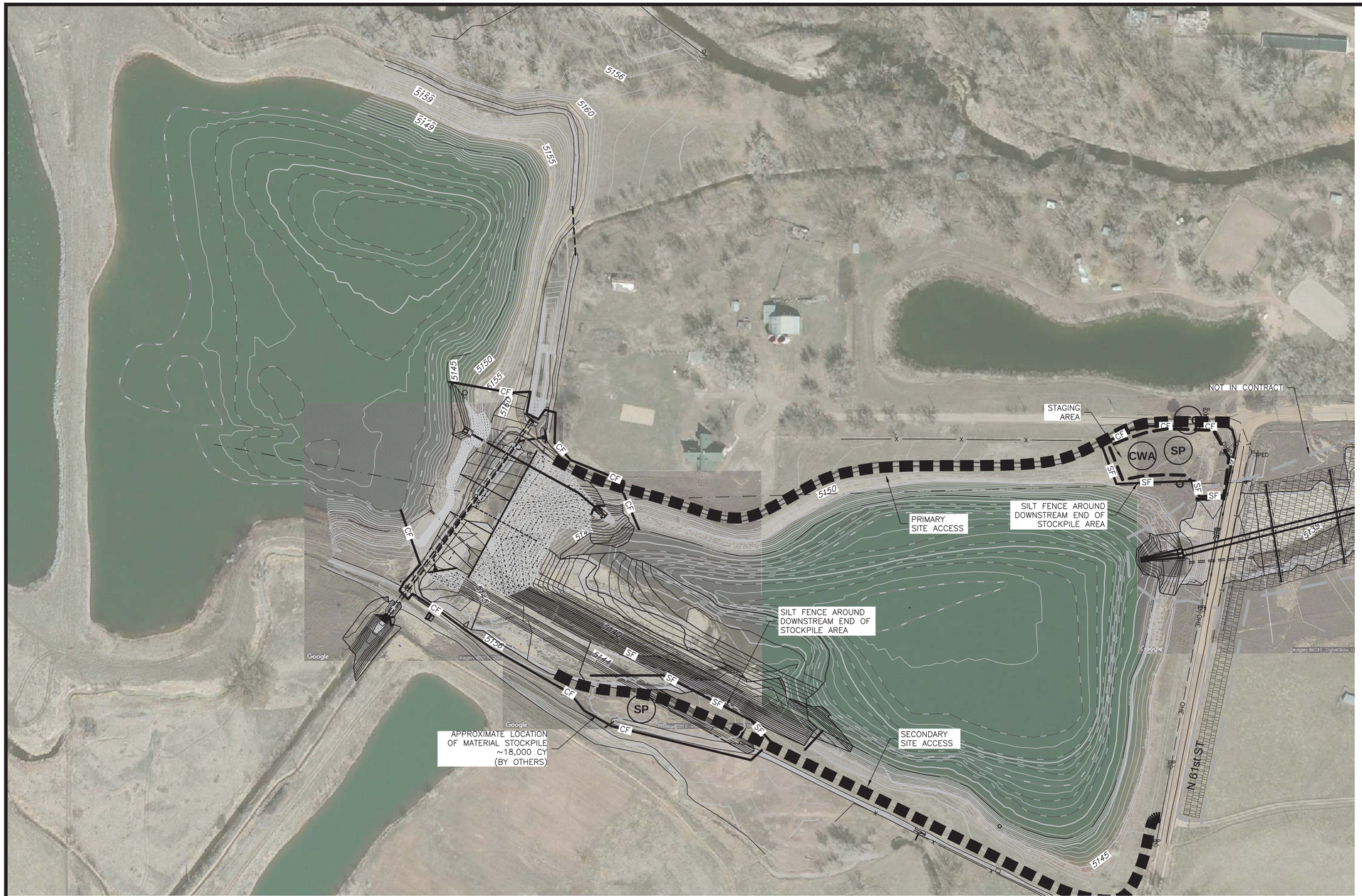

LEGEND:

- SP — STOCKPILE MANAGEMENT
- SF — SILT FENCE
- CWA — CONCRETE WASH AREA
- VTC — VEHICLE TRACKING CONTROL
- CF — CONSTRUCTION FENCE

Scale 1" = 100'
1' CONTOUR INTERVAL

100 50 0 100 200 300
SCALE IN FEET

Applegate Group, Inc.
Water Resource Advisors for the West
1490 West 121st Ave., Suite 100
Denver, CO 80234
(303) 452-6611
Fax: (303) 452-2759
email: info@applegategroup.com Website: www.applegategroup.com

EROSION AND SEDIMENT CONTROL

BOULDER COUNTY
WEST LAKE DAM REHABILITATION

NO	DATE	BY	CHK'D	DESCRIPTION
8	05/JUL/18	LLD	SS	Issued for Bid
7	18/JAN/18	LLD	SS	Revised Conc. Channel and Flume
6	26/DEC/17	LLD	SS	SEO Comments
5	19/SEP/17	LLD	SS	SEO Comments on Manhole
4	23/AUG/17	LLD	SS	SEO Comments
3	11/APR/17	LLD	SS	Revised Foothills Siphon Inlet, Added Spillway Overflow Channel

REVISIONS

Date:	JULY 26, 2018
Job No:	15-117
Drawn:	LD
Design:	CH
Checked:	SS
Scale:	1" = 100'

COLORADO LICENSED
STEVEN SMITH
43364
7/26/18
PROFESSIONAL ENGINEER

Sheet: 22
Of: 25

Filing No. C-2068

Plot Date: 07/26/18-1:39pm, Plotted by:Luke, Drawing Path: N:\15117 Westlake and A Frame\Drawings\Plan Set\Westlake\Drawing Name:W Erosion Control.dwg

EXISTING BATHYMETRY
SCALE 1" = 60'

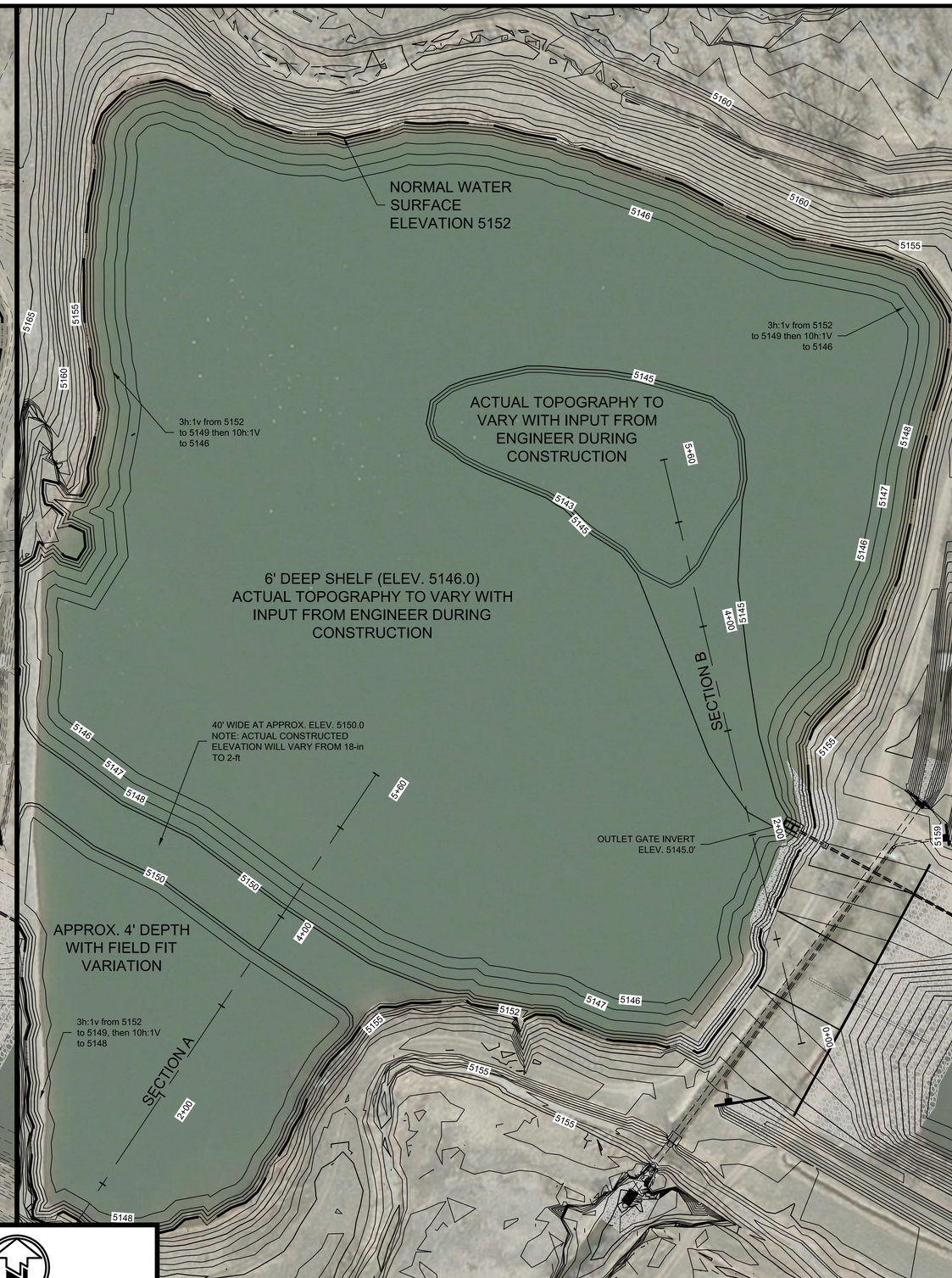

PROPOSED BATHYMETRY
SCALE 1" = 60'

Scale 1" = 60'
1' CONTOUR INTERVAL

60 30 0 60 120 180
SCALE IN FEET

Applegate Group, Inc.
Water Resource Advisors for the West
1490 West 121st Ave., Suite 100
Denver, CO 80234
(303) 452-6611
Fax: (303) 452-2759
email: info@applegategroup.com Website: www.applegategroup.com

SEDIMENT DISPOSAL PLAN

BOULDER COUNTY
WEST LAKE DAM
REHABILITATION

NO	DATE	BY	CHK'D	DESCRIPTION
8	05/JUL/18	LLD	SS	Issued for Bid
7	18/JAN/18	LLD	SS	Revised Cons., Channel and Flume.
6	26/DEC/17	LLD	SS	SEO Comments
5	19/SEP/17	LLD	SS	SEO Comments, on Manhole
4	23/AUG/17	LLD	SS	SEO Comments
3	11/APR/17	LLD	SS	Revised Foothills Spillway Inlet, Added Spillway Overflow Channel

REVISIONS

Date:	July 26, 2018
Job No:	15-117
Drawn:	LD
Design:	CH
Checked:	SS
Scale:	N/A

COLORADO LICENSED
STEVEN SMITH
43364
7/26/18
PROFESSIONAL ENGINEER

Sheet: **23**
Of: **25**

Filing No. C-2068

Plot Date: 07/30/18-1:45pm, Plotted by:Herb, Drawing Path: C:\Users\Thom\Appdata\Local\temp\AcPublish_3380\Drawing1\West Lake Backfill Option 2 Exhibit.dwg

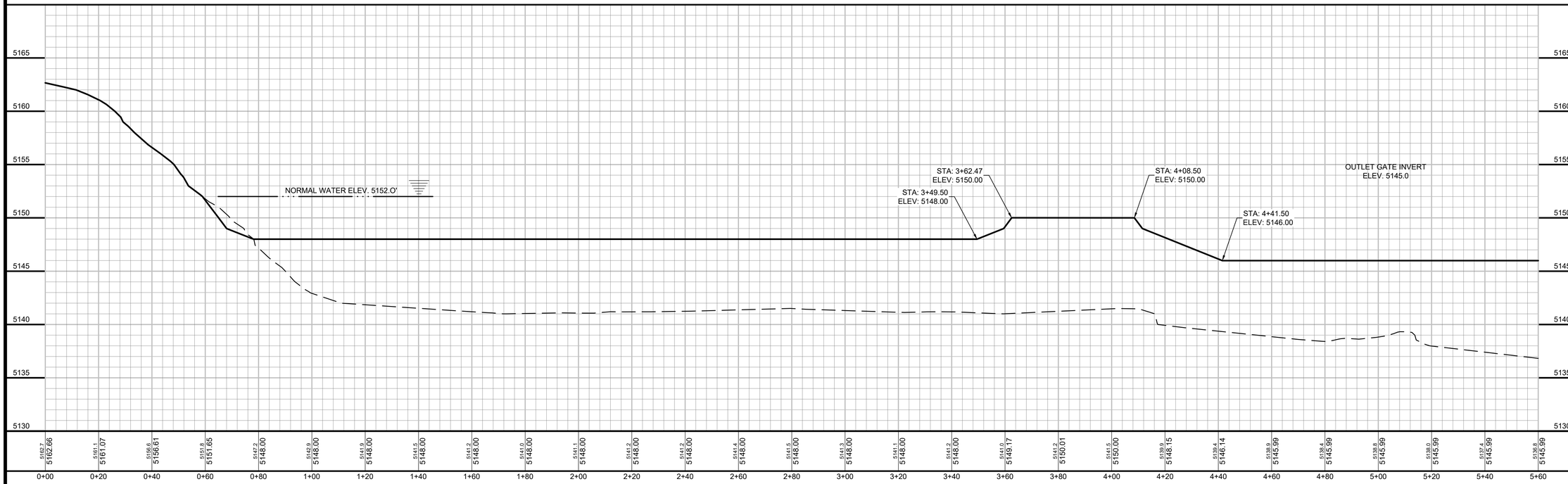

SECTION A
SCALE 1" = 20'h/1"=5'v

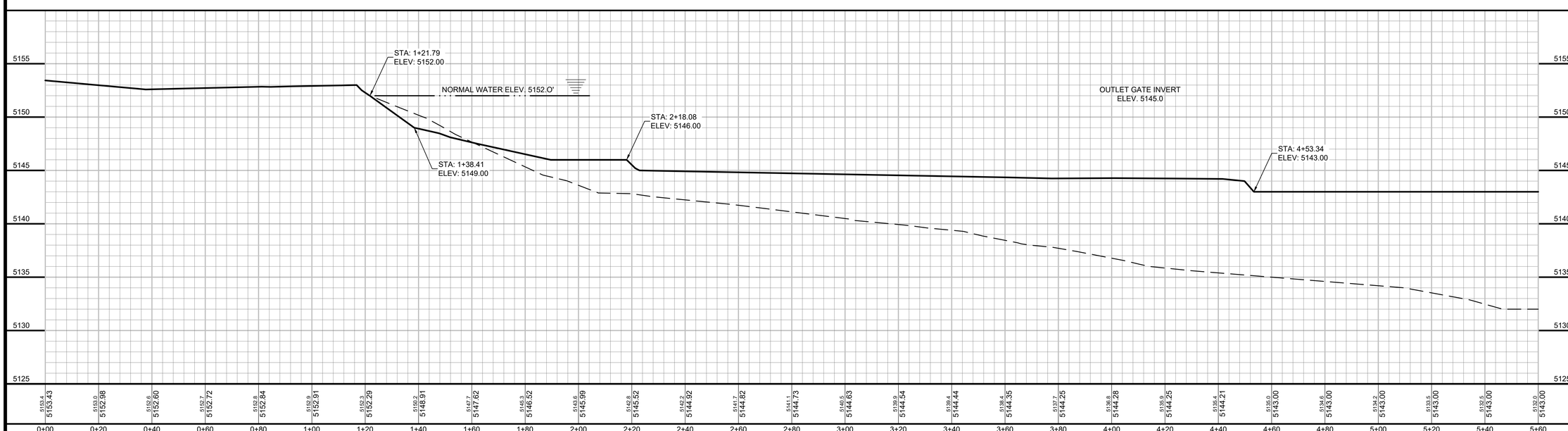

SECTION B
SCALE 1" = 20'h/1"=5'v

Applegate Group, Inc.
Water Resource Advisors for the West
1490 West 121st Ave., Suite 100
Denver, CO 80234
(303) 452-6611
Fax: (303) 452-2759
email: info@applegategroup.com Website: www.applegategroup.com

SEDIMENT DISPOSAL SECTIONS

BOULDER COUNTY
WEST LAKE DAM
REHABILITATION

NO	DATE	BY	CHK'D	DESCRIPTION
8	05/JUL/18	LLD	SS	*Issued for Bid*
7	18/JAN/18	LLD	SS	*Revised Conc. Channel and Flume*
6	26/DEC/17	LLD	SS	*SEO Comments*
5	19/SEP/17	LLD	SS	*SEO Comments on Manhole*
4	23/AUG/17	LLD	SS	*SEO Comments*
3	11/APR/17	LLD	SS	*Revised Foothills Siphon Inlet, Added Spillway Overflow Channel*

REVISIONS

Date:	July 26, 2018
Job No:	15-117
Drawn:	LD
Design:	CH
Checked:	SS
Scale:	N/A

COLORADO LICENSED
STEVEN SMITH
43364
7/26/18
PROFESSIONAL ENGINEER

Sheet: **24** Of: **25**

Filing No. C-2068

Plot Date: 07/30/18-1:45pm, Plotted by:Rlaws, Drawing Path: C:\Users\Thom.RA\appdata\local\temp\AcPublish_3180\Drawing home\West Lake Beadfil Option 2 Exhibit.dwg

Stockpile Management (SP) — MM-2

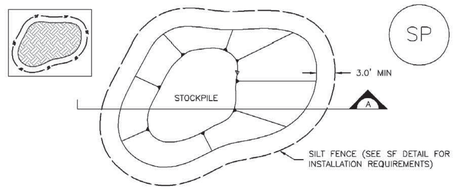

STOCKPILE PROTECTION PLAN

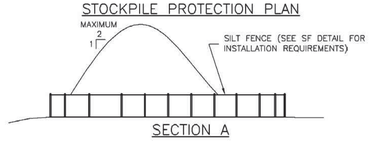

SECTION A

SP–1. STOCKPILE PROTECTION

STOCKPILE PROTECTION INSTALLATION NOTES

1. SEE PLAN VIEW FOR:
   –LOCATION OF STOCKPILES.
   –TYPE OF STOCKPILE PROTECTION.

2. INSTALL PERIMETER CONTROLS IN ACCORDANCE WITH THEIR RESPECTIVE DESIGN DETAILS. SILT FENCE IS SHOWN IN THE STOCKPILE PROTECTION DETAILS; HOWEVER, OTHER TYPES OF PERIMETER CONTROLS INCLUDING SEDIMENT CONTROL LOGS OR ROCK SOCKS MAY BE SUITABLE IN SOME CIRCUMSTANCES. CONSIDERATIONS FOR DETERMINING THE APPROPRIATE TYPE OF PERIMETER CONTROL FOR A STOCKPILE INCLUDE WHETHER THE STOCKPILE IS LOCATED ON A PERVIOUS OR IMPERVIOUS SURFACE, THE RELATIVE HEIGHTS OF THE PERIMETER CONTROL AND STOCKPILE, THE ABILITY OF THE PERIMETER CONTROL TO CONTAIN THE STOCKPILE WITHOUT FAILING IN THE EVENT THAT MATERIAL FROM THE STOCKPILE SHIFTS OR SLUMPS AGAINST THE PERIMETER, AND OTHER FACTORS.

3. STABILIZE THE STOCKPILE SURFACE WITH SURFACE ROUGHENING, TEMPORARY SEEDING AND MULCHING, EROSION CONTROL BLANKETS, OR SOIL BINDERS. SOILS STOCKPILED FOR AN EXTENDED PERIOD (TYPICALLY FOR MORE THAN 60 DAYS) SHOULD BE SEEDED AND MULCHED WITH A TEMPORARY GRASS COVER ONCE THE STOCKPILE IS PLACED (TYPICALLY WITHIN 14 DAYS). USE OF MULCH ONLY OR A SOIL BINDER IS ACCEPTABLE IF THE STOCKPILE WILL BE IN PLACE FOR A MORE LIMITED TIME PERIOD (TYPICALLY 30–60 DAYS).

4. FOR TEMPORARY STOCKPILES ON THE INTERIOR PORTION OF A CONSTRUCTION SITE, WHERE OTHER DOWNGRADIENT CONTROLS, INCLUDING PERIMETER CONTROL, ARE IN PLACE, STOCKPILE PERIMETER CONTROLS MAY NOT BE REQUIRED.

A 25 EROSION CONTROL DETAIL
NOT TO SCALE

Silt Fence (SF) — SC-1

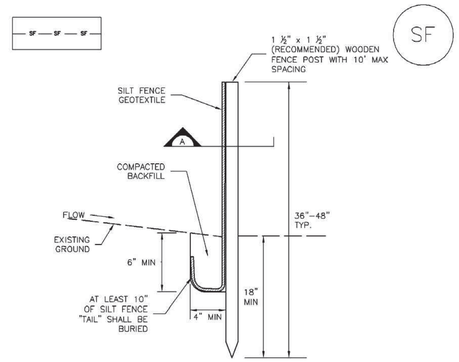

SILT FENCE

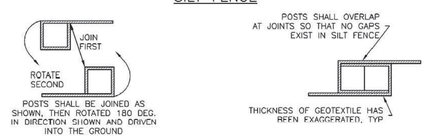

SECTION A

SF–1. SILT FENCE

B 25 EROSION CONTROL DETAIL
NOT TO SCALE

SM-3 — Construction Fence (CF)

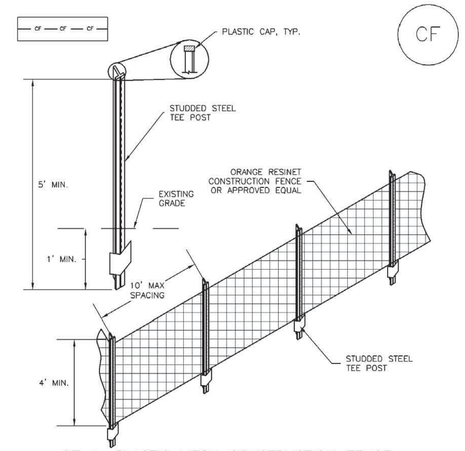

CF–1. PLASTIC MESH CONSTRUCTION FENCE

CONSTRUCTION FENCE INSTALLATION NOTES

1. SEE PLAN VIEW FOR:
   –LOCATION OF CONSTRUCTION FENCE.

2. CONSTRUCTION FENCE SHOWN SHALL BE INSTALLED PRIOR TO ANY LAND DISTURBING ACTIVITIES.

3. CONSTRUCTION FENCE SHALL BE COMPOSED OF ORANGE, CONTRACTOR–GRADE MATERIAL THAT IS AT LEAST 4' HIGH. METAL POSTS SHOULD HAVE A PLASTIC CAP FOR SAFETY.

4. STUDDED STEEL TEE POSTS SHALL BE UTILIZED TO SUPPORT THE CONSTRUCTION FENCE. MAXIMUM SPACING FOR STEEL TEE POSTS SHALL BE 10'.

5. CONSTRUCTION FENCE SHALL BE SECURELY FASTENED TO THE TOP, MIDDLE, AND BOTTOM OF EACH POST.

C 25 EROSION CONTROL DETAIL
NOT TO SCALE

Concrete Washout Area (CWA) — MM-1

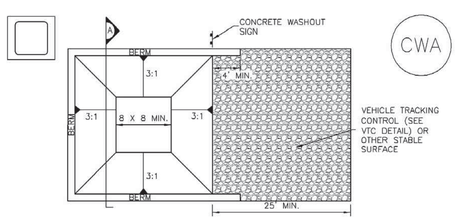

CONCRETE WASHOUT AREA PLAN

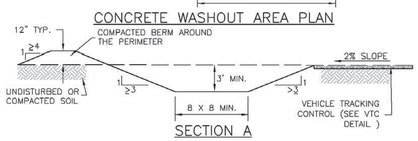

SECTION A

CWA–1. CONCRETE WASHOUT AREA

D 25 EROSION CONTROL DETAIL
NOT TO SCALE

SM-4 — Vehicle Tracking Control (VTC)

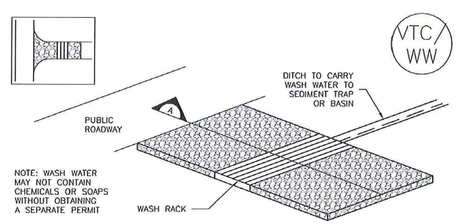

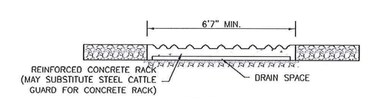

SECTION A

VTC–2. AGGREGATE VEHICLE TRACKING CONTROL WITH WASH RACK

E 25 EROSION CONTROL DETAIL
NOT TO SCALE

Applegate Group, Inc.
Water Resource Advisors for the West
1490 West 121st Ave., Suite 100
Denver, CO 80234
(303) 452-6611
Fax: (303) 452-2759
email: info@applegategroup.com Website: www.applegategroup.com

EROSION AND SEDIMENT CONTROL DETAILS

BOULDER COUNTY
WEST LAKE DAM
REHABILITATION

REVISIONS

NO	DATE	BY	CHK'D	DESCRIPTION
8	05/JUL/18	LLD	SS	Issued for Bid
7	18/JAN/18	LLD	SS	Revised Conc. Channel and Flume
6	26/DEC/17	LLD	SS	SEO Comments
5	19/SEP/17	LLD	SS	SEO Comments on Manhole
4	23/AUG/17	LLD	SS	SEO Comments
3	11/APR/17	LLD	SS	Revised Foothills Siphon Inlet, Added Spillway Overflow Channel

Date:	JULY 26, 2018
Job No:	15–117
Drawn:	LD
Design:	CH
Checked:	SS
Scale:	As Noted

COLORADO LICENSED STEVEN SMITH 43364 7/26/18 PROFESSIONAL ENGINEER

Sheet: 25
Of: 25

Filing No. C-2068

Plot Date: 07/30/18–1:39pm, Plotted By:Luke, Drawing Path: N:\15117 Westlake and A Frame\Drawings\Plan Set\Westlake\Drawing Name:W Erosion Control Details.dwg