BOULDER COUNTY PUBLIC WORKS DEPARTMENT
ENGINEERING DIVISION

2021
MORTON HEIGHTS SUBDIVISION PAVING, DRAINAGE & SIDEWALK IMPROVEMENTS
BOULDER COUNTY PROJECT NO. RS-MOR-001

SCOPE OF WORK:

THIS PROJECT INCLUDES THE INSTALLATION OF CONCRETE CURB/GUTTER, CONCRETE SIDEWALK, A RAISED CONCRETE CROSSWALK, STORM SEWER IMPROVEMENTS, ROADWAY RE-PAVING AND TWO PEDESTRIAN TRAIL CONNECTIONS. ALL OF THE IMPROVEMENTS ARE WITHIN THE MORTON HEIGHTS SUBDIVISION LOCATED JUST OUTSIDE OF THE TOWN OF NIWOT, COLORADO.

THIS ENTIRE PROJECT IS LOCATED WITHIN UNINCORPORATED BOULDER COUNTY.

ROADWAY DESIGN:

WALKER AVE. IS CLASSIFIED BY BOULDER COUNTY AS A RESIDENTIAL COLLECTOR (RC) ROADWAY.

- POSTED SPEED LIMIT ON WALKER AVE. IS 25 MPH.
- DESIGN SPEED FOR WALKER AVE. IS 25 MPH.

MORTON ROAD IS CLASSIFIED BY BOULDER COUNTY AS A RESIDENTIAL COLLECTOR (RC) ROADWAY.

- POSTED SPEED LIMIT ON MORTON ROAD IS 15 MPH IN THE SCHOOL ZONE.
- POSTED SPEED LIMIT ON MORTON ROAD, OUTSIDE OF THE SCHOOL ZONE IS 25 MPH.
- DESIGN SPEED FOR MORTON ROAD, OUTSIDE OF THE SCHOOL ZONE IS 30 MPH.

MARATHON ROAD IS CLASSIFIED BY BOULDER COUNTY AS A RESIDENTIAL COLLECTOR (RC) FROM WALKER AVE, EAST TO THE SCHOOL ENTRANCE. PAST THE SCHOOL ENTRANCE, MARATHON ROAD IS CLASSIFIED AS A LOCAL (L) ROAD.

- DESIGN SPEED FOR THE PORTION OF MARATHON RD. CLASSIFIED AS RESIDENTIAL COLLECTOR IS 20 MPH, DUE TO EXISTING PHYSICAL RESTRICTIONS.

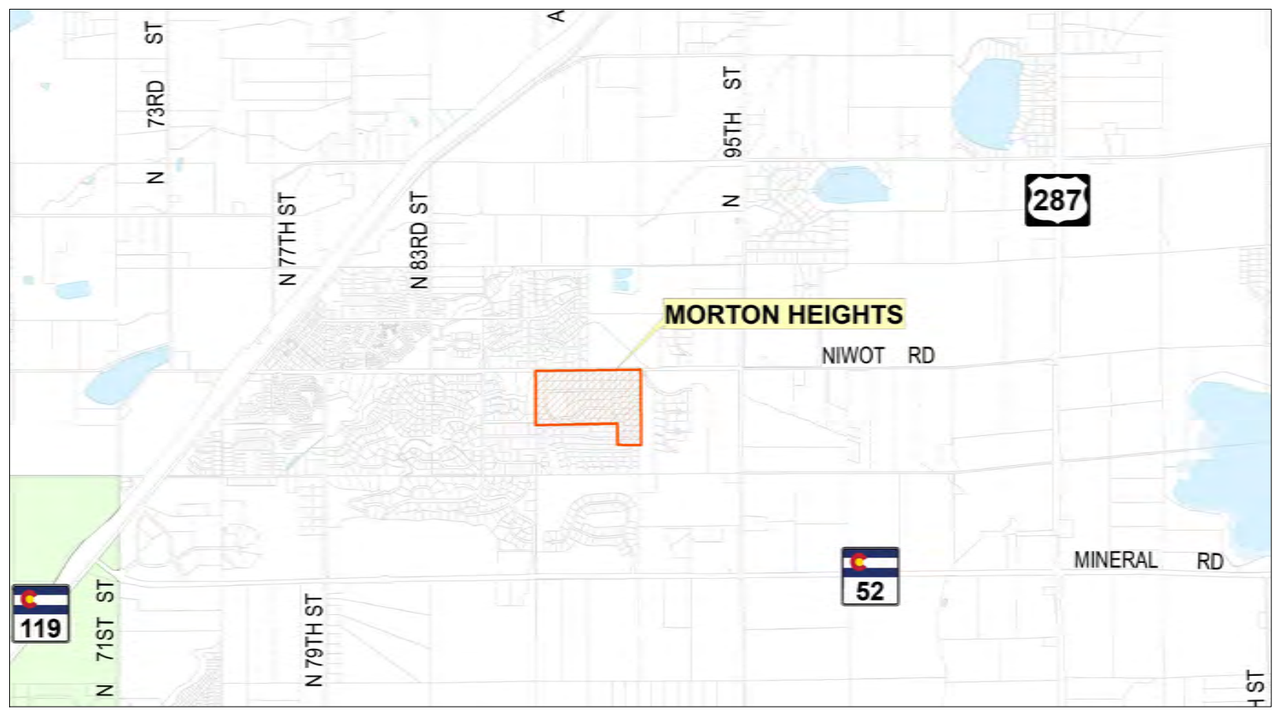

0 8,000 16,000
HORIZONTAL SCALE: 1"=8000'

N

SHEET NO:	INDEX OF SHEETS:
1	COVER SHEET
2	OVERALL SITE PLAN-IMPROVEMENTS
3	LIMITS OF CONSTRUCTION
4	M & S STANDARD PLANS
5-8	GENERAL NOTES
9-10	SUMMARY OF QUANTITIES
11-14	SURVEY CONTROL
15-16	TEMPORARY CONSTRUCTION EASEMENTS
17-23	EXISTING UTILITIES/TESTHOLE LOCATIONS
24-35	REMOVALS (CLEAR/GRUB, CONCRETE, ASPHALT)
36-68	STORM DRAINAGE
69-79	CONCRETE
80-97	ROADWAY PAVING
98-104	GRADING
105-112	SIGNAGE AND STRIPING
113-123	PEDESTRIAN TRAILS
124-141	STORMWATER MANAGEMENT PLAN (SWMP)

APPROVED FOR CONSTRUCTION:

MICHAEL A. THOMAS, P.E. DATE:
COUNTY ENGINEER

FOR CONSTRUCTION

CALL UTILITY NOTIFICATION CENTER OF COLORADO
811
CALL 2-BUSINESS DAYS IN ADVANCE BEFORE YOU DIG, GRADE, OR EXCAVATE FOR THE MARKING OF UNDERGROUND MEMBER UTILITIES

REVISIONS: NO.	DATE	REVISION DESCRIPTION:

BOULDER COUNTY PUBLIC WORKS
ENGINEERING DIVISION

DESIGNED:	CAD/C3D:	CHECKED:	DATE:
RL	RL	DW	07/30/2021

MORTON HEIGHTS-2021
COVER SHEET
PROJECT NO: RS-MOR-001 SHEET NO: 1

C:\AUTOCAD\PROJECTS\MORTON HEIGHTS\PLAN SET\MORTON-HEIGHTS-COVER 20 FEB 2018.DWG LAST PLOTTED 7/30/2021 12:11 PM

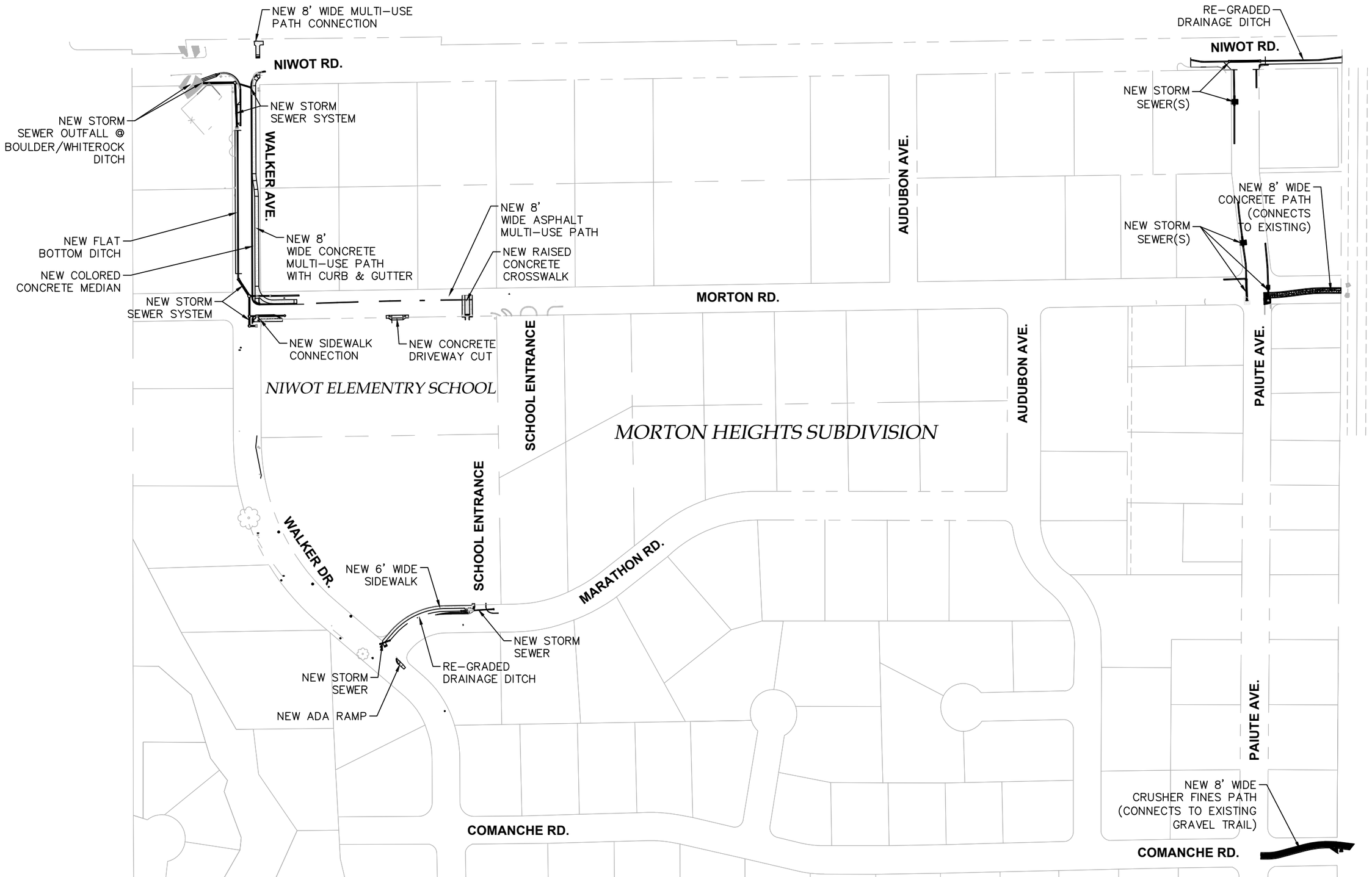

0 200 400

HORIZONTAL SCALE: 1"=200'

N

FOR CONSTRUCTION

CALL UTILITY NOTIFICATION CENTER OF COLORADO

811

CALL 2-BUSINESS DAYS IN ADVANCE BEFORE YOU DIG, GRADE, OR EXCAVATE FOR THE MARKING OF UNDERGROUND MEMBER UTILITIES

REVISIONS:	NO.	DATE	REVISION DESCRIPTION:

BOULDER COUNTY PUBLIC WORKS
ENGINEERING DIVISION

DESIGNED:	CAD/C3D:	CHECKED:	DATE:
RL	RL	DW	07/30/2021

MORTON HEIGHTS-2021

OVERALL SITE PLAN-IMPROVEMENTS

PROJECT NO: **RS-MOR-001** SHEET NO: **2**

C:\AUTOCAD\PROJECTS\MORTON HEIGHTS\PLAN SET\MORTON-HEIGHTS-OVERALL 30 MAR 2021.DWG LAST PLOTTED 7/30/2021 12:11 PM

NIWOT RD.

NIWOT RD.

WALKER AVE.

AUDUBON AVE.

MORTON RD.

SCHOOL ENTRANCE

AUDUBON AVE.

PAIUTE AVE.

MORTON HEIGHTS SUBDIVISION

SCHOOL ENTRANCE

WALKER DR.

MARATHON RD.

PAIUTE AVE.

COMANCHE RD.

COMANCHE RD.

LEGEND:

LIMITS OF CONSTRUCTION

TOTAL AREA=190,007.48 SQ. FT.
OR 4.36 ACRES

0 200 400

HORIZONTAL SCALE: 1"=200'

N

FOR CONSTRUCTION

CALL UTILITY NOTIFICATION CENTER OF COLORADO

811

CALL 2-BUSINESS DAYS IN ADVANCE BEFORE YOU DIG, GRADE, OR EXCAVATE FOR THE MARKING OF UNDERGROUND MEMBER UTILITIES

REVISIONS:	NO.	DATE	REVISION DESCRIPTION:

BOULDER COUNTY PUBLIC WORKS
ENGINEERING DIVISION

DESIGNED:	CAD/C3D:	CHECKED:	DATE:
RL	RL	DW	07/30/2021

MORTON HEIGHTS-2021

LIMITS OF CONSTRUCTION

PROJECT NO: **RS-MOR-001** SHEET NO: **3**

C:\AUTOCAD\PROJECTS\MORTON HEIGHTS\PLAN SET\MORTON-HEIGHTS-LOC 29 MAR 2021.DWG LAST PLOTTED 7/30/2021 12:11 PM

PLAN NUMBER	M STANDARD TITLE	PAGE NUMBER
□ M-100-1	STANDARD SYMBOLS (3 SHEETS)	1-3
□ M-100-2	ACRONYMS AND ABBREVIATIONS (4 SHEETS)	4-7
□ M-203-1	APPROACH ROADS	8
□ M-203-2	DITCH TYPES	9
□ M-203-11	SUPERELEVATION CROWNED AND DIVIDED HIGHWAYS (3 SHEETS)	10-12
□ M-203-12	SUPERELEVATION STREETS (2 SHEETS)	13-14
■ M-206-1	EXCAVATION AND BACKFILL FOR STRUCTURES (2 SHEETS)	15-16
□ M-206-2	EXCAVATION AND BACKFILL FOR BRIDGES (2 SHEETS)	17-18
■ M-208-1	TEMPORARY EROSION CONTROL (11 SHEETS)	19-29
□ M-210-1	MAILBOX SUPPORTS (2 SHEETS)	30-31
□ M-214-1	NURSERY STOCK DETAILS	32
■ M-216-1	SOIL RETENTION COVERING (2 SHEETS)	33-34
■ M-412-1	CONCRETE PAVEMENT JOINTS (5 SHEETS)	35-39
□ M-412-2	CONCRETE PAVEMENT CRACK REPAIR (4 SHEETS) *(NEW, ISSUED ON OCTOBER 7, 2019)*	
□ M-510-1	STRUCTURAL PLATE PIPE H-20 LOADING	40
□ M-601-1	SINGLE CONCRETE BOX CULVERT (CAST-IN-PLACE) (2 SHEETS)	41-42
□ M-601-2	DOUBLE CONCRETE BOX CULVERT (CAST-IN-PLACE) (2 SHEETS)	43-44
□ M-601-3	TRIPLE CONCRETE BOX CULVERT (CAST-IN-PLACE) (2 SHEETS)	45-46
□ M-601-10	HEADWALL FOR PIPES	47
□ M-601-11	TYPE "S" SADDLE HEADWALLS FOR PIPE	48
□ M-601-12	HEADWALLS AND PIPE OUTLET PAVING	49
□ M-601-20	WINGWALLS FOR PIPE OR BOX CULVERTS (2 SHEETS)	50-51
□ M-603-1	METAL PIPE (4 SHEETS)	52-55
■ M-603-2	REINFORCED CONCRETE PIPE	56
□ M-603-3	PRECAST CONCRETE BOX CULVERT *(REVISED ON SEPTEMBER 10, 2020)*	57
□ M-603-4	CORRUGATED POLYETHYLENE PIPE (AASHTO M294) AND POLYPROPYLENE PIPE (AASHTO M330)	58
□ M-603-5	POLYVINYL CHLORIDE (PVC) PIPE (AASHTO M304)	59
□ M-603-6	STEEL REINFORCED POLYETHYLENE RIBBED PIPE (AASHTO MP 20)	60
■ M-603-10	CONCRETE AND METAL END SECTIONS	61
□ M-603-12	TRAVERSABLE END SECTIONS AND SAFETY GRATES (3 SHEETS)	62-64
■ M-604-10	INLET, TYPE C	65
■ M-604-11	INLET, TYPE D	66
□ M-604-12	CURB INLET TYPE R (2 SHEETS)	67-68
□ M-604-13	CONCRETE INLET TYPE 13	69
■ M-604-20	MANHOLES (3 SHEETS)	70-72
□ M-604-25	VANE GRATE INLET (5 SHEETS)	73-77
□ M-605-1	SUBSURFACE DRAINS	78

PLAN NUMBER	M STANDARD TITLE	PAGE NUMBER
□ M-606-1	MIDWEST GUARDRAIL SYSTEM TYPE 3 W-BEAM 31 INCHES (19 SHEETS) *(REVISED ON MARCH 5, 2020)*	79-97
□ M-606-13	GUARDRAIL TYPE 7 F-SHAPE BARRIER (4 SHEETS)	98-101
□ M-606-14	PRECAST TYPE 7 CONCRETE BARRIER (4 SHEETS) *(REVISED ON AUGUST 21, 2020)*	~~102-104~~
□ M-606-15	GUARDRAIL TYPE 9 SINGLE SLOPE BARRIER (11 SHEETS) *(REVISED ON MARCH 5, 2020)*	105-115
□ M-607-1	WIRE FENCES AND GATES (3 SHEETS)	116-118
■ M-607-2	CHAIN LINK FENCE (3 SHEETS)	119-121
□ M-607-3	BARRIER FENCE	122
□ M-607-4	DEER FENCE, GATES, AND GAME RAMPS (7 SHEETS) *(REVISED ON JULY 13, 2020)*	~~123-127~~
□ M-607-10	PICKET SNOW FENCE	128
□ M-607-15	ROAD CLOSURE GATE (9 SHEETS)	129-137
■ M-608-1	CURB RAMPS (10 SHEETS)	138-147
■ M-609-1	CURBS, GUTTERS, AND SIDEWALKS (4 SHEETS)	148-151
□ M-611-1	CATTLE GUARD (2 SHEETS)	152-153
□ M-611-2	DEER GUARD (2 SHEETS)	154-155
□ M-614-1	RUMBLE STRIPS (3 SHEETS)	156-158
□ M-614-2	SAND BARREL ARRAYS (2 SHEETS)	159-160
□ M-615-1	EMBANKMENT PROTECTOR TYPE 3	161
□ M-615-2	EMBANKMENT PROTECTOR TYPE 5	162
□ M-616-1	INVERTED SIPHON	163
□ M-620-1	FIELD LABORATORY CLASS 1	164
□ M-620-2	FIELD LABORATORY CLASS 2 (2 SHEETS)	165-166
□ M-620-11	FIELD OFFICE CLASS 1	167
□ M-620-12	FIELD OFFICE CLASS 2	168
□ M-629-1	SURVEY MONUMENTS (2 SHEETS)	169-170

COLORADO
DEPARTMENT OF TRANSPORTATION

M&S STANDARDS PLANS LIST

July 31, 2019

Revised on February 16, 2021

ALL OF THE M&S STANDARD PLANS, AS SUPPLEMENTED AND REVISED, APPLY TO THIS PROJECT WHEN USED BY DESIGNATED PAY ITEM OR SUBSIDIARY ITEM.

THE M&S STANDARD PLANS USED TO DESIGN THIS PROJECT ARE INDICATED BY A MARKED BOX ■ AND WILL BE ATTACHED TO THE PLANS. ALL THE OTHER M&S STANDARD PLANS ARE STILL ELIGIBLE FOR CONSTRUCTION IF APPROVED BY AN APPROPRIATE CDOT ENGINEER.

PLAN NUMBER	S STANDARD TITLE	PAGE NUMBER
■ S-612-1	DELINEATOR INSTALLATIONS (8 SHEETS)	171-178
□ S-613-1	ROADWAY LIGHTING (6 SHEETS) *(REVISED ON SEPTEMBER 30, 2020)*	~~179-186~~
□ S-613-2	ALTERNATIVE ROADWAY LIGHTING (4 SHEETS) *(NEW, ISSUED ON SEPTEMBER 30, 2020)*	
■ S-614-1	GROUND SIGN PLACEMENT (2 SHEETS)	187-188
■ S-614-2	CLASS I SIGNS	189
□ S-614-3	CLASS II SIGNS	190
□ S-614-4	CLASS III SIGNS (3 SHEETS)	191-193
□ S-614-5	BREAK-AWAY SIGN SUPPORT DETAILS FOR CLASS III SIGNS (2 SHEETS)	194-195
□ S-614-6	CONCRETE FOOTINGS AND SIGN ISLANDS FOR CLASS III SIGNS (2 SHEETS)	196-197
□ S-614-8	TUBULAR STEEL SIGN SUPPORT DETAILS (7 SHEETS) *(REVISED ON DECEMBER 31, 2020)*	198-204
~~S-614-9~~	~~PEDESTRIAN PUSH BUTTON POST ASSEMBLY (2 SHEETS)~~ *(SUPERSEDED ON JANUARY 23, 2020 BY S-614-45)*	~~205-206~~
□ S-614-10	MARKER ASSEMBLY INSTALLATIONS	207
□ S-614-11	MILEPOST SIGN DETAIL FOR HIGH SNOW AREAS	208
□ S-614-12	STRUCTURE NUMBER INSTALLATION (2 SHEETS)	209-210
□ S-614-14	FLASHING BEACON AND SIGN INSTALLATIONS (4 SHEETS)	211-214
■ S-614-20	TYPICAL POLE MOUNT SIGN INSTALLATIONS	215
□ S-614-21	CONCRETE BARRIER SIGN POST INSTALLATIONS (2 SHEETS) *(REVISED ON SEPTEMBER 21, 2020)*	216-217
□ S-614-22	TYPICAL MULTI-SIGN INSTALLATIONS	218
□ S-614-40	TYPICAL TRAFFIC SIGNAL 30'-75' DOUBLE MAST ARMS 65'-75' SINGLE MAST ARMS (5 SHEETS)	219-223
□ S-614-40A	ALTERNATIVE TRAFFIC SIGNAL 25'-55' SINGLE MAST ARMS (4 SHEETS)	224-227
□ S-614-41	TEMPORARY SPAN WIRE SIGNALS (13 SHEETS)	228-240
□ S-614-42	CABINET FOUNDATION DETAIL (4 SHEETS)	241-244
□ S-614-43	TRAFFIC LOOP AND MISCELLANEOUS SIGNAL DETAILS (8 SHEETS)	245-252
□ S-614-44	PEDESTAL POLE SIGNALS (2 SHEETS)	253-254
□ S-614-45	PEDESTRIAN PUSH BUTTON POST ASSEMBLY DETAILS (6 SHEETS) *(REVISED ON DECEMBER 3, 2020)*	
□ S-614-50	STATIC SIGN MONOTUBE STRUCTURES (12 SHEETS)	255-266
□ S-614-60	DYNAMIC SIGN MONOTUBE STRUCTURES (14 SHEETS)	267-280
■ S-627-1	PAVEMENT MARKINGS (9 SHEETS) *(REVISED ON FEBRUARY 16, 2021)*	281-289
□ S-630-1	TRAFFIC CONTROLS FOR HIGHWAY CONSTRUCTION (24 SHEETS)	290-313
■ S-630-2	BARRICADES, DRUMS, CONCRETE BARRIERS (TEMP) AND VERTICAL PANELS	314
□ S-630-3	FLASHING BEACON (PORTABLE) DETAILS	315
□ S-630-4	STEEL SIGN SUPPORT (TEMPORARY) INSTALLATION DETAILS (2 SHEETS)	316-317
□ S-630-5	PORTABLE RUMBLE STRIPS (TEMPORARY) (2 SHEETS)	318-319
□ S-630-6	EMERGENCY PULL-OFF AREA (TEMPORARY)	320
■ S-630-7	ROLLING ROADBLOCKS FOR TRAFFIC CONTROL (3 SHEETS)	321-323

GENERAL NOTES

G1. ALL MATERIALS, WORKMANSHIP AND CONSTRUCTION SHALL MEET OR EXCEED THE STANDARDS AND SPECIFICATIONS SET FORTH IN THE COLORADO DEPARTMENT OF TRANSPORTATION STANDARD SPECIFICATIONS FOR ROAD AND BRIDGE CONSTRUCTION 2019 AND THE COLORADO DEPARTMENT OF TRANSPORTATION STANDARD PLANS M&S STANDARDS, BOULDER COUNTY MULTIMODAL TRANSPORTATION STANDARDS, APPLICABLE STATE AND FEDERAL REGULATIONS, PROJECT SPECIAL PROVISIONS AND PROJECT PLANS. WHERE THERE IS CONFLICT BETWEEN THESE PLANS, SPECIFICATIONS, OR ANY APPLICABLE STANDARDS, THE MOST RESTRICTIVE STANDARD SHALL APPLY. ALL REFERENCE TO ANY PUBLISHED STANDARDS SHALL REFER TO THE LATEST REVISION OF SAID STANDARD, UNLESS SPECIFICALLY STATED OTHERWISE.

G2. LOCATION OF STAGING AREAS, EQUIPMENT AND MATERIAL STORAGE ARE THE CONTRACTOR'S RESPONSIBILITY, AND MUST BE COORDINATED WITH THE PROPERTY OWNER.

G3. CONTRACTOR SHALL PROTECT ALL SURVEY AND RIGHT-OF-WAY MONUMENTATION DURING CONSTRUCTION OPERATIONS. ANY MONUMENTS DISTURBED BY THE CONSTRUCTION OPERATIONS SHALL BE RESET BY THE CONTRACTOR AT HIS EXPENSE, IN ACCORDANCE WITH CDOT SPECIFICATIONS, SECTION 629, SURVEY MONUMENTATION.

G4. CONSTRUCTION SURVEYING INCLUDES ALL FIELD SURVEY STAKING AS REQUIRED FOR CONSTRUCTION OF THE PROJECT, INCLUDING LAYOUT FOR STRIPING AND PAVING MARKINGS.

G5. CONTRACTOR SHALL PROTECT EXISTING VEGETATION NOT DESIGNATED FOR REMOVAL, INSIDE AND OUTSIDE THE PROJECT AREA. LOCATE, MARK, AND PROTECT VALVES AND CONTROL BOXES ADJACENT TO CONSTRUCTION ACTIVITIES. DAMAGED VEGETATION UNDESIGNATED FOR REMOVAL, SHALL BE REPLACED WITH SIMILAR ITEMS AT THE CONTRACTOR'S EXPENSE.

G6. CONSTRUCTION INSPECTION AND MATERIAL TESTING WILL BE PROVIDED BY BOULDER COUNTY.

G7. CONTRACTOR SHALL LIMIT CONSTRUCTION ACTIVITIES TO THOSE AREAS WITHIN THE LIMITS OF DISTURBANCE. ANY DISTURBANCE BEYOND THOSE LIMITS SHALL BE RESTORED TO ORIGINAL CONDITION AT THE CONTRACTOR'S EXPENSE. CONSTRUCTION ACTIVITIES SHALL ALSO INCLUDE VEHICLE AND EQUIPMENT PARKING, DISPOSAL OF LITTER, AND ANY OTHER ACTIVITY THAT WOULD ALTER EXISTING CONDITIONS.

G8. UNLESS OTHERWISE SPECIFIED, REMOVAL ITEMS SHALL BECOME THE PROPERTY OF THE CONTRACTOR. REMOVALS SHALL BE DISPOSED OF OUTSIDE OF THE PROJECT'S LIMITS, UNLESS OTHERWISE APPROVED BY THE ENGINEER.

G9. THE CONTRACTOR SHALL BE RESPONSIBLE FOR ALL ASPECTS OF SAFETY INCLUDING, BUT NOT LIMITED TO, EXCAVATION, TRENCHING, SHORING, TRAFFIC CONTROL AND SECURITY. REFER TO OSHA PUBLICATION 2226, EXCAVATING AND TRENCHING.

G10. THE CONTRACTOR SHALL BE RESPONSIBLE FOR RECORDING AS-BUILT INFORMATION ON A SET OF RECORD DRAWINGS KEPT ON THE CONSTRUCTION SITE, AND AVAILABLE TO THE BOULDER COUNTY INSPECTOR AT ALL TIMES. THESE UPDATES SHALL BE DONE AS WORK PROGRESSES. PREPARATION OF ASBUILT PLANS WILL NOT BE PAID FOR SEPARATELY. FINAL PIPE INVERTS AND SIGN LOCATIONS SHALL BE PROVIDED IN CAD FORMAT AND SHALL BE INCLUDED IN THE WORK.

G11. UPON COMPLETION OF CONSTRUCTION, THE SITE SHALL BE CLEANED AND RESTORED TO A CONDITION EQUAL TO OR BETTER THAN, THAT WHICH EXISTED BEFORE CONSTRUCTION, OR TO THE GRADES AND CONDITION REQUIRED IN THESE PLANS.

G12. DISPOSAL OF EXCESS MATERIAL OFF-SITE OR THE IMPORTING OF MATERIALS ON-SITE, REGARDLESS OF PROPERTY OWNERSHIP, MUST BE DONE IN ACCORDANCE WITH ALL FEDERAL, STATE AND LOCAL ENVIRONMENTAL REGULATIONS AND POLICES.

G13. ALL EXCESS MATERIAL GENERATED WITHIN THE PROJECT LIMITS SHALL BE REMOVED FROM THE PROJECT SITE AT NO ADDITIONAL COST TO THE PROJECT UNLESS SPECIFIED IN THE PLANS.

G14. A BOULDER COUNTY HAULER LICENSE IS REQUIRED FOR HAULING OF MATERIAL OFF SITE, REGARDLESS OF WHERE THE MATERIAL IS DEPOSITED. THIS REQUIREMENT APPLIES TO THE PRIME CONTRACTOR AS WELL AS ANY SUBCONTRACTORS THAT COLLECT, TRANSPORT OR DISPOSE OF DISCARDED MATERIALS (GARBAGE, RECYCLABLES, OR COMPOSTABLES, CONSTRUCTION AND DEMOLITION WASTE, OR LANDSCAPING MATERIALS) IN UNINCORPORATED BOULDER COUNTY.

SEE LINK FOR ADDITIONAL INFORMATION : https://www.bouldercounty.org/environment/trash/hauler-license/.

EARTHWORK NOTES

E1. WATER SHALL BE USED AS A DUST PALLIATIVE, WHERE REQUIRED, AND APPROVED BY THE ENGINEER. LOCATIONS SHALL BE AS ORDERED AND WILL NOT BE PAID FOR SEPARATELY. DEPTH OF MOISTURE – DENSITY CONTROL FOR THIS PROJECT SHALL BE AS FOLLOWS:

- FULL DEPTH OF EMBANKMENTS
- BASES OF CUTS AND FILLS EIGHT (8) INCHES

E2. EXCAVATION REQUIRED FOR COMPACTION OF BASES OF CUTS AND FILLS WILL BE CONSIDERED AS SUBSIDIARY TO THAT OPERATION AND WILL NOT BE PAID FOR SEPARATELY.

E3. THE TYPE OF COMPACTION FOR EARTHWORK ON THIS PROJECT SHALL BE AASHTO T99 (STANDARD PROCTOR). PROOF ROLLING OF ALL SUBGRADE WILL BE REQUIRED PRIOR TO PAVING AND SHALL BE INCLUDED IN THE COST OF THE WORK.

SIGNING, STRIPING AND TRAFFIC CONTROL NOTES

S1. CONTRACTOR SHALL BE RESPONSIBLE FOR PROVIDING, INSTALLING, AND MAINTAINING THE REQUIRED CONSTRUCTION ZONE TRAFFIC CONTROL DEVICES AND PERSONNEL PER SPECIAL PROVISIONS, SECTION 630 OF THE STANDARD SPECIFICATIONS AND THE MUTCD. THE CONTRACTOR IS PROHIBITED FROM STARTING WORK AT ANY LOCATION IF A TRAFFIC CONTROL PLAN HAS NOT BEEN SUBMITTED AND APPROVED BY THE BOULDER COUNTY ENGINEER OR TRAFFIC ENGINEER.

S2. CONTRACTOR SHALL PROVIDE SAFE, LOCAL ACCESS FOR ALL ADJACENT PROPERTY OWNERS, EMERGENCY SERVICES, SCHOOL BUSES, DELIVERIES, ETC. AT ALL TIMES.

S3. REMOVAL OF TEMPORARY PAVEMENT MARKINGS WILL NOT BE PAID FOR SEPARATELY BUT SHALL BE INCLUDED IN THE WORK.

S4. THE CONTRACTOR SHALL MAINTAIN PAVEMENT MARKINGS ON THE PROJECT AT ALL TIMES THROUGHOUT THE CONSTRUCTION PERIOD.

S5. TRAFFIC WILL USE THE PRESENT ROADWAY DURING CONSTRUCTION.

S6. ONLY ONE LANE MAY BE CLOSED TO TRAFFIC AT ANY TIME, UNLESS DIRECTED BY THE ENGINEER. THE CONTRACTOR SHALL ONLY CLOSE THE SECTION OF ROADWAY REQUIRED TO PERFORM THE WORK FOR THE CURRENT CONSTRUCTION PHASE.

S7. TWO LANES OF TRAFFIC SHALL BE MAINTAINED DURING ALL NON-WORKING HOURS.

S8. THE CONTRACTOR SHALL NOT LEAVE A VERTICAL EDGE NEXT TO THE TRAVELED WAY DURING NON-WORKING HOURS, UNLESS OTHERWISE DIRECTED BY THE ENGINEER.

S9. THERE SHALL BE NO SITE CONSTRUCTION ACTIVITIES ON SATURDAYS, SUNDAYS OR HOLIDAYS UNLESS THERE IS SPECIFIC WRITTEN APPROVAL BY BOULDER COUNTY.

S10. SIGN POSTS:

A. SIGN POSTS SHALL BE 2"X 2" X 10' (14 GAUGE) GALVANIZED PERFORATED SQUARE STEEL TUBING.

B. SIGN POST BASES SHALL BE 2 1/4"X 2 1/4"(12 GAUGE, 3' IN LENGTH) GALVANIZED PERFORATED SQUARE STEEL TUBING.

C. BASES SHALL BE INCLUDED IN THE COST FOR SIGN POSTS. TOP OF BASES SHALL BE 3"□± ABOVE FINISHED GRADE. THE SIGN POST SHALL BE INSTALLED 4"□□INTO THE BASE AND BOLTED BOTH WAYS.

D. SIGN POST LOCATIONS SHALL BE APPROVED BY THE ENGINEER AND ROAD MAINTENANCE SIGN SHOP REPRESENTATIVE PRIOR TO INSTALLATION.

E. POST LOCATIONS IN CONCRETE MEDIAN OR ISLANDS SHALL HAVE 6" DIAMETER□□PVC PIPE SLEEVE INSTALLED PRIOR TO POURING CONCRETE.

S11. SIGN THICKNESS OF ALL SIGN PANELS SHALL BE .100"

PAVEMENT MARKINGS:

A. FINAL PAVEMENT STRIPING SHALL BE MODIFIED EPOXY PER CDOT STANDARD SPECIFICATIONS.

B. ALL STOP LINES, CROSSWALKS AND PAVEMENT MARKING SYMBOLS SHALL BE WHITE, PREFORMED THERMOPLASTIC, "PREMARK"□OR EQUIVALENT.

C. STOP LINES SHALL BE 2' WIDE; CROSSWALKS SHALL BE 2' X 9', UNLESS OTHERWISE NOTED.

D. PAVEMENT MARKING ARROWS SHALL BE ELONGATED.

E. PAVEMENT MARKINGS FOR BIKE LANES SHALL BE PER MUTCD FIG. 9C-3 B WITH HELMETED BICYCLE SYMBOL.

F. PREFORMED THERMOPLASTIC INSTALLATION ON CONCRETE SHALL HAVE THE CONCRETE CURE REMOVED PRIOR TO INSTALLATION OR A BONDING AGENT APPLIED TO THE CONCRETE BEFORE INSTALLATION. INSTALLATION SHALL FOLLOW THE MANUFACTURER'S SPECIFICATIONS.

EROSION AND STORMWATER NOTES

ER1. A BOULDER COUNTY STORMWATER QUALITY PERMIT (SWQP) IS REQUIRED FOR THIS PROJECT. BECAUSE IT:

- DISTURBS ONE ACRE OR MORE IN SIZE
- IS WITHIN 100 HORIZONTAL FEET OF A WATERCOURSE
- FOR MORE INFORMATION REFER TO THE BOULDER COUNTY WEBSITE
- THE BOULDER COUNTY STORMWATER QUALITY PERMIT APPLICATION CAN BE ACQUIRED VIA: https: //www.bouldercounty.org/transportation/permits/stormwater-quality-permit/

ER2. NO EARTHWORK ACTIVITY CAN COMMENCE UNTIL INITIAL BMP INSTALLATION IS COMPLETE AND BOULDER COUNTY INSPECTOR/REPRESENTATIVE HAS APPROVED THE INSTALLATION.

ER3. THE CONTRACTOR SHALL PROTECT ALL WORK AREAS AND FACILITIES FROM WATER AT ALL TIMES. AREA AND FACILITIES SUBJECTED TO FLOODING, REGARDLESS OF THE SOURCE OF WATER SHALL BE PROMPTLY DEWATERED AND RESTORED AT NO COST TO THE OWNER. THIS SHALL INCLUDE REMOVAL OF ANY DEBRIS CAUSED BY FLOODING.

ER4. ALL EROSION CONTROL MEASURES SHALL BE INSTALLED AT THE LIMITS OF CONSTRUCTION AND AT AREAS WITH DISTURBED SOIL, ON OR OFF SITE, PRIOR TO ANY OTHER GROUND DISTURBING ACTIVITY. ALL EROSION CONTROL MEASURES SHALL BE MAINTAINED IN GOOD REPAIR BY THE CONTRACTOR, UNTIL SUCH TIME AS THE ENTIRE DISTURBED AREAS ARE STABILIZED WITH HARD SURFACE OR LANDSCAPING. EROSION CONTROL MEASURES SHALL BE PLACED CONTINUALLY AS DRAINAGE FEATURES ARE BEING CONSTRUCTED.

ER5. IT WILL BE THE RESPONSIBILITY OF THE CONTRACTOR TO MAINTAIN EXISTING BMP'S AND ENSURE THEIR COMPLETE REMOVAL FROM THE PROJECT ONCE 70% OF THE PRE-EXISTING VEGETATION HAS BEEN RE-ESTABLISHED.

ER6. SEE STORMWATER MANAGEMENT PLAN.

STORMWATER CONTROL MEASURES

1. CONTRACTOR/PERMITTEE SHALL PERIODICALLY INSPECT ALL INSTALLED CONTROL MEASURES, PROVIDE MAINTENANCE, AND MAKE REPAIRS AS NECESSARY TO PREVENT THEIR FAILURE.
2. SILT FENCE OR AN EQUIVALENT SHALL BE PLACED AS PERIMETER CONTROL ON ALL CONSTRUCTION ACTIVITIES THAT OCCUR ON LAND. UNLESS OTHERWISE SPECIFIED IN THE CONTRACT DOCUMENTS, OR OTHERWISE REQUESTED, REMOVE PERIMETER CONTROLS WITHIN 30 DAYS AFTER THE DATE OF WARRANTY PERFORMANCE OF THE WORK OR IN ACCORDANCE WITH BMPS.
3. VEHICLE TRACKING CONTROLS SHALL BE USED AT ALL VEHICLE AND EQUIPMENT ACCESS POINTS TO THE SITE TO PREVENT SEDIMENT EXITING THE PROJECT SITE ONTO PAVED PUBLIC ROADS. ACCESS SHALL BE PROVIDED ONLY AT LOCATIONS APPROVED BY THE ENGINEER. VEHICLE TRACKING CONTROL LOCATIONS SHALL BE RECORDED ON THE SWMP SITE MAP.
4. ALL INLETS AND CULVERTS SHALL BE PROTECTED DURING ONSITE CONSTRUCTION ACTIVITIES. INLET PROTECTION LOCATIONS SHALL BE RECORDED ON THE SWMP SITE MAP.
5. CONCRETE WASTED IN DESIGNATED DEWATERING AREAS SHALL BE COLLECTED, REMOVED FROM THE PROJECT SITE, AND DISPOSED OF PROPERLY. WASTED CONCRETE ALSO INCLUDES EXCESS CONCRETE REMOVED FROM FORMS, SPILLS, SLOP, AND ALL OTHER UNUSED CONCRETE THAT ENDS UP ON THE GROUND.
6. THE CONTRACTOR/PERMITTEE MUST MAINTAIN A SPILL KIT ON SITE WHEN WORKING AROUND SURFACE WATERS. IF POLLUTANTS ARE SPILLED INTO ANY SURFACE WATERS DURING THE COURSE OF CONSTRUCTION ACTIVITIES, THE CONTRACTOR/PERMITTEE MUST NOTIFY THE OWNER's REPRESENTATIVE OR ENGINEER IMMEDIATELY.
7. ALL EXISTING MATURE TREES WITHIN THE DESIGNATED PROJECT AREA ARE TO BE FENCE PROTECTED IN PLACE AT DRIPLINE UNLESS OTHERWISE DIRECTED BY THE ENGINEER. PRIOR TO THE INITIATION OF WORK, THE ENGINEER SHALL MARK ANY TREES AND/OR LARGE SHRUBS TO BE REMOVED AS PART OF CONSTRUCTION ACTIVITIES. AREAS OF TREE REMOVAL SHALL BE DETERMINED AND MARKED IN COLLABORATION BETWEEN THE CONTRACTOR/PERMITTEE AND THE ENGINEER.
8. ALL EXCAVATION ACTIVITIES OCCURRING WITHIN 10 FEET OF THE DRIPLINE SHALL BE PERFORMED BY HAND AND IF NECESSARY, ROOTS SHALL BE CLEANLY CUT NOT TORN OR RIPPED. IF EXPOSED, TREE ROOTS SHALL BE BACKFILLED AND WATERED ON THE SAME DAY OF CUTTING AND APPROVED ROOT STIMULATOR SHALL BE APPLIED. SOILS SHALL NOT BE COMPACTED WITHIN THE DRIPLINE OF MATURE TREES UNLESS OTHERWISE APPROVED BY THE ENGINEER.

WASTE MANAGEMENT

1. THE CONTRACTOR/PERMITTEE SHALL NOT BURN, BURY, OR OTHERWISE DISCHARGE CONSTRUCTION OR DEMOLITION WASTE ON THE SITE UNLESS SPECIFIED OTHERWISE.
2. THE CONTRACTOR/PERMITTEE SHALL PROVIDE A PORTABLE TOILET AND ASSOCIATED MAINTENANCE SCHEDULE FOR THE CONSTRUCTION AREA SUFFICIENT TO ACCOMMODATE THE CONSTRUCTION CREW AND ALL OTHER AUTHORIZED PERSONS TO BE ONSITE DURING CONSTRUCTION ACTIVITIES.

HAZARDOUS MATERIALS

1. THE CONTRACTOR/PERMITTEE SHALL TRANSPORT, USE, AND STORE HAZARDOUS MATERIALS IN ACCORDANCE WITH ALL REGULATORY REQUIREMENTS. SPILLED HAZARDOUS MATERIALS, INCLUDING HAZARDOUS LIQUID WASTES, SHALL BE REMOVED FROM THE SITE AND THE PROPERTY RESTORED TO ITS PRE SPILL STATE IN ACCORDANCE WITH REGULATORY REQUIREMENTS.
2. THE CONTRACTOR/PERMITTEE SHALL IMMEDIATELY REPORT SPILLS TO THE PROPER REGULATORY AUTHORITY AND SHALL IMMEDIATELY NOTIFY THE ENGINEER.
3. HANDLING OF CONSTRUCTION FUELS AND LUBRICANTS:

A. THE CONTRACTOR/PERMITTEE SHALL EMPLOY PERSONS QUALIFIED TO HANDLE CONSTRUCTION EQUIPMENT FUELS AND LUBRICANTS.

B. THE CONTRACTOR/PERMITTEE SHALL REFUEL AND SERVICE EQUIPMENT AWAY FROM FLOODPLAINS OF RIVERS, STREAMS AND OTHER BODIES OF WATER. THE CONTRACTOR/PERMITTEE SHALL ENSURE EQUIPMENT THAT ENTERS THE WATER IS FREE FROM EXTERNAL GREASE, OIL, AND MUD.

C. THE CONTRACTOR/PERMITTEE SHALL PREVENT HANDLING AND FUELING OPERATIONS FROM CONTAMINATING THE GROUND, SURFACE WATER, AND GROUND WATER. THE CONTRACTOR/PERMITTEE SHALL USE CONTAINMENT BERMS AND AN IMPERMEABLE BASE COURSE OR OTHER SYSTEM TO CONTAIN SPILLED FUEL.

GENERAL CARE OF WATER

CARE OF WATER SHALL INCLUDE THE DESIGN OF ALL TEMPORARY CARE OF WATER PROVISIONS INCLUDING COFFER DAMS, SUMPS, PUMPING SYSTEMS, PIPELINES, CHANNELS, FLUMES, DRAINS, AND OTHER PROTECTIVE AND DEWATERING WORKS TO ALLOW FOR WORK TO BE PERFORMED UNDER DRY CONDITIONS.

1. NO CONSTRUCTION EQUIPMENT SHALL BE OPERATED BELOW THE EXISTING WATER SURFACE UNLESS SPECIFICALLY AUTHORIZED BY THE STORMWATER QUALITY PERMIT ISSUED BY BOULDER COUNTY, AND ANY OTHER APPLICABLE LOCAL, STATE OR FEDERAL LICENSE OR PERMIT.
2. THE CONTRACTOR/PERMITTEE IS RESPONSIBLE FOR ALL CARE OF WATER INCLUDING BUT NOT LIMITED TO DESIGNING, SUPPLYING, CONSTRUCTING, OPERATING, AND REMOVING ALL CARE OF WATER PROVISION INCLUDING COFFER DAMS AND SEDIMENT REMOVAL SYSTEMS; DESIGNING, SUPPLYING, INSTALLING, MAINTAINING, AND REMOVING PROTECTIVE WORKS FOR WINTER OPERATIONS OF CARE OF WATER SYSTEMS.CARE OF WATER SHALL INCLUDE PROVISIONS FOR HANDLING GROUNDWATER, RAINSTORM RUNOFF, SNOW, SNOWMELT, AND ICE THAT MAY ENTER THE WORK AREA.
3. PROTECTIVE WORKS SHALL BE DESIGNED BY THE CONTRACTOR/PERMITTEE AS NECESSARY TO INCLUDE ENCLOSURES, INSULATION, AND HEATING SYSTEMS TO ENSURE THAT DEWATERING SYSTEMS OPERATE CONTINUOUSLY AND DO NOT BECOME FROZEN DURING COLD WEATHER.
4. THE CONTRACTOR/PERMITTEE SHALL PROVIDE AND MAINTAIN SEDIMENT PONDS OR OTHER MEANS, REMOVE SEDIMENT FROM WATERS COLLECTED WITHIN ACTIVE CONSTRUCTION AREAS PRIOR TO ALLOWING IT TO ENTER OR RETURN INTO THE WATERCOURSE. CONTRACTOR/PERMITTEE SHALL DISPOSE OF SEDIMENTS IN A SUITABLE OFF SITE WASTE DISPOSAL FACILITY.
5. THE CONTRACTOR/PERMITTEE SHALL MONITOR WATER TURBIDITY DURING CONSTRUCTION ACTIVITIES AND SHALL SHUT DOWN WORKS AT TIMES OF EXCESS TURBIDITY IN ORDER TO ALLOW THE WATER TO CLEAR PRIOR TO RE COMMENCEMENT OF IN STREAM WORK.
6. TURBIDITY IS EXPECTED DURING PLACEMENT AND REMOVAL OF WATER CONTROL. IF WATERS BECOME NOTICEABLY TURBID, CONTRACTOR/PERMITTEE SHOULD PROMPTLY HALT OPERATIONS TO ALLOW WATERS TO CLEAR PRIOR TO RESUMING OPERATIONS. FURTHERMORE, SHUTDOWNS FOR SILTY OR TURBID WATER MAY BE SPECIFIED BY THE ENGINEER OR THE OWNER'S REPRESENTATIVE, AT THEIR DISCRETION.
7. IN THE EVENT OF UNSCHEDULED CONSTRUCTION ACTIVITY THAT RESULTS IN A VISUALLY CONSPICUOUS PLUME OF

SEDIMENT, CONTRACTOR/PERMITTEE SHALL IMMEDIATELY NOTIFY THE ENGINEER AND UNDERTAKE MITIGATION ACTIONS NECESSARY TO COMPLY WITH THE SPECIFIED CLEAN WATER CRITERIA.

UTILITY NOTES

U1. THE CONTRACTOR IS SPECIFICALLY CAUTIONED THAT THE LOCATION AND/ OR ELEVATION OF EXISTING UTILITIES, AS SHOWN ON THESE PLANS, ARE BASED ON RECORDS OF THE VARIOUS UTILITY COMPANIES AND, WHERE POSSIBLE, MEASUREMENTS TAKEN IN THE FIELD. THE INFORMATION IS NOT TO BE RELIED UPON AS BEING EXACT OR COMPLETE.

U2. THE CONTRACTOR SHALL CALL FOR UTILITY LOCATIONS A MINIMUM OF THREE (3) WORKING DAYS (PREFERRED SEVEN (7) WORKING DAYS) PRIOR TO ANY EXCAVATION AT THE UTILITY NOTIFICATION CENTER OF COLORADO AT 1-800-922-1987 OR 811. ALSO, NOTIFY INDIVIDUAL UTILITIES 48-HOURS PRIOR TO ANY EXCAVATION.

U3. THE CONTRACTOR IS RESPONSIBLE FOR PROTECTING UTILITIES, INCLUDING ALL ACTIVE IRRIGATION FACILITIES DURING CONSTRUCTION AND SHALL HOLD THE COUNTY HARMLESS FOR DAMAGE ARISING FROM FAILURE TO ADEQUATELY PROTECT UTILITIES. THE CONTRACTOR SHALL BE RESPONSIBLE FOR ALL MEANS REQUIRED TO PROTECT EXISTING UTILITIES AND/OR TO WORK AROUND SUCH UTILITIES. THIS INCLUDES, BUT IT NOT LIMITED TO, SUPPORTING AND SHORING OF EXISTING UTILITIES.

U4. ALL UNDERGROUND UTILITY CONSTRUCTION SHALL BE COMPLETED AND ACCEPTED PRIOR TO PLACING PAVEMENT.

U5. THE CONTRACTOR SHALL COORDINATE AND COOPERATE WITH BOULDER COUNTY AND ALL UTILITY COMPANIES INVOLVED, WITH REGARD TO RELOCATIONS, EXTENSIONS AND REARRANGEMENTS OF EXISTING UTILITIES DURING CONSTRUCTION AND TO ASSURE THAT THE WORK IS ACCOMPLISHED IN A TIMELY FASHION AND WITH A MINIMUM DISRUPTION OF SERVICE. THE CONTRACTOR SHALL BE RESPONSIBLE FOR CONTACTING ALL PARTIES, IN ADVANCE, AFFECTED BY ANY DISRUPTION OF ANY UTILITY SERVICE AS WELL AS THE UTILITY COMPANIES.

U6. IF A CONFLICT EXISTS BETWEEN UTILITIES AND PROPOSED IMPROVEMENTS AND/OR A DESIGN MODIFICATION IS REQUIRED, THE CONTRACTOR SHALL COORDINATE WITH THE ENGINEER TO MODIFY THE DESIGN. DESIGN MODIFICATION(S) MUST BE APPROVED BY BOULDER COUNTY PRIOR TO BEGINNING CONSTRUCTION.

U7. EXISTING UTILITIES WERE FIELD LOCATED AND POTHOLED ON 6-15-18 BY GOODBEE AND ASSOCIATES. SUBSURFACE UTILITY INVESTIGATION WAS CONDUCTED IN LOCATIONS WHERE POTENTIAL CONFLICTS WITH THE PROPOSED STORM SEWER ARE EXPECTED. COPIES OF THE UTILITY POTHOLING ARE AVAILABLE UPON REQUEST FROM BOULDER COUNTY.

U8. THE FOLLOWING IS A LIST OF KNOWN UTILITIES WITH SERVICE WITHIN THE PROJECT AREA:

AGENCY:	UTILITY:	CONTACT:	PHONE:
COMCAST	CABLE	KEVIN YOUNG	720-281-8666
KERR-MCGEE	GAS	BRETT CAVANAUGH	720-929-3296
LEFT HAND WATER DISTRICT	WATER	STEVE BUCKBEE	303-530-4200
XCEL ENERGY	ELECTRIC	GARY MOTZINGER	303-571-3186
XCEL ENERGY	GAS	GARY MOTZINGER	303-571-3186
CENTURY LINK	COMMUNICATIONS	BENSON WILLIAMS	720-578-5142
ST. VRAIN VALLEY SCHOOL DISTRICT	IRRIGATION	DALE BJORHUS	303-589-3040
ST. VRAIN VALLEY SCHOOL DISTRICT	OPERATIONS	GARY FRANTZ	303-682-7326
UNITE PRIVATE NETWORK	COMMUNICATIONS	KEVIN SCHUCARD	719-313-6826
ZAYO BANDWIDTH	COMMUNICATIONS	JAMES BLACK	719-216-8508
NIWOT SANITATION DISTRICT	SANITARY SEWER	KATHY GRUMLEY	303-919-4015
BOULDER AND WHITE ROCK DITCH CO.	IRRIGATION	BILL CAMPBELL	303-775-8051

ENVIRONMENTAL NOTES:

EN1. THE MIGRATORY BIRD TREATY ACT (MBTA) PROTECTS MIGRATORY BIRDS AND THEIR NESTS AND EGGS. FOR PROJECTS THAT COULD POTENTIALLY HAVE AN IMPACT, THE FOLLOWING CONDITIONS APPLY.

ST. TREE TRIMMING/REMOVAL: TREE TRIMMING AND/OR REMOVAL ACTIVITIES SHALL BE COMPLETED BEFORE BIRDS BEGIN TO NEST OR AFTER THE YOUNG HAVE FLEDGED. IN COLORADO, MOST NESTING AND REARING ACTIVITIES OCCUR BETWEEN APRIL 1 AND AUGUST 31. HOWEVER, SINCE SOME BIRDS NEST AS EARLY AS FEBRUARY, A NESTING BIRD SURVEY SHALL BE CONDUCTED BY A BIOLOGIST BEFORE ANY TREE REMOVAL OR TRIMMING ACTIVITIES BEGIN.

SU. BRIDGE/CULVERT WORK: BRIDGE OR CULVERT WORK THAT MAY DISTURB NESTING BIRDS SHALL BE COMPLETED BEFORE BIRDS BEGIN TO NEST OR AFTER THE YOUNG HAVE FLEDGED. IN COLORADO, MOST NESTING AND REARING ACTIVITIES OCCUR BETWEEN APRIL 1 AND AUGUST 31. IF WORK ACTIVITIES ARE PLANNED BETWEEN THESE DATES, NESTS SHALL BE REMOVED BEFORE NESTING BEGINS AND APPROPRIATE MEASURES TAKEN TO ASSURE NO NEW NESTS ARE CONSTRUCTED. FAILURE TO REMOVE AND KEEP NESTS FROM BECOMING ESTABLISHED MAY POSTPONE PROJECT CONSTRUCTION.

SV. CLEARING/GRUBBING ACTIVITIES: CLEARING AND GRUBBING OF VEGETATION THAT MAY DISTURB GROUND NESTING BIRDS SHALL BE COMPLETED BEFORE BIRDS BEGIN TO NEST OR AFTER THE YOUNG HAVE FLEDGED. IN COLORADO, MOST NESTING AND REARING ACTIVITIES OCCUR BETWEEN APRIL 1 AND AUGUST 31. VEGETATION SHALL BE REMOVED AND/OR TRIMMED TO A HEIGHT OF SIX (6) INCHES OR LESS PRIOR TO APRIL 1. ONCE VEGETATION HAS BEEN REMOVED AND/OR TRIMMED, APPROPRIATE MEASURES, I.E. REPEATED MOWING/TRIMMING, SHALL BE IMPLEMENTED TO ASSURE VEGETATION DOES NOT GROW MORE THAN SIX (6) INCHES. FAILURE TO MAINTAIN VEGETATION HEIGHT OF SIX (6) INCHES OR LESS MAY POSTPONE PROJECT CONSTRUCTION.

SW. BIRDS OF PREY: IF CONSTRUCTION OCCURS BETWEEN FEBRUARY 15 AND AUGUST 31, A PRE-CONSTRUCTION SURVEY FOR NESTING RAPTORS MUST BE COMPLETED WITHIN A HALF-MILE BUFFER OF THE PROJECT LIMITS. IF ANY NESTING RAPTORS OCCUR WITHIN THIS BUFFER AREA, FOLLOW THE COLORADO PARKS AND WILDLIFE'S "RECOMMENDED BUFFER ZONES AND SEASONAL RESTRICTIONS FOR COLORADO RAPTORS" GUIDELINES

EN2. NOXIOUS WEEDS: NOXIOUS WEEDS MAY PERSIST ON OR ADJACENT TO THE PROJECT LOCATION. NOXIOUS WEEDS ON THE STATE A & B WEEDS LIST MUST BE CONTROLLED IN ACCORDANCE WITH STATE REQUIREMENTS. THE STATE WEED LIST IS AVAILABLE HERE: HTTPS://WWW.COLORADO.GOV/PACIFIC/AGCONSERVATION/NOXIOUS-WEED-SPECIES. WEED CONTROL SHALL BE INCLUDED IN THE COST OF THE WORK.

EN3. WASTE MANAGEMENT: CONTRACTOR SHALL INSPECT EQUIPMENT AND VEHICLES AS OFTEN AS IS NECESSARY TO ENSURE THAT PETROLEUM, OILS AND LUBRICANTS (POL) ARE NOT LEAKING ONTO THE SOIL OR PAVEMENT. THE CONTRACTOR SHALL HAVE READY APPROVED ABSORBENT MATERIALS OR CONTAINERS OF SUFFICIENT CAPACITY TO CONTAIN ANY LEAK OF POL THAT CAN REASONABLY BE FORESEEN. ALL MATERIALS RESULTING FROM POL LEAKAGE CONTROL AND CLEANUP SHALL REMAIN THE PROPERTY OF THE CONTRACTOR. THE COST OF CONTROL AND CLEANUP OF POL LEAKS WILL NOT BE PAID FOR SEPARATELY, BUT WILL BE INCLUDED IN THE COST OF THE WORK.

EN4. WASTE MATERIALS: THERE SHALL BE NO STOCKPILING OR SIDE CASTING OF WASTE MATERIALS, INCLUDING BUT NOT LIMITED TO, PAINT CHIPS, ASPHALT OR CONCRETE ADJACENT TO WETLANDS OR WATERS OF THE U.S.

EN5. MATERIALS STOCKPILES: ALL STOCKPILED PROJECT MATERIALS SHALL BE LOCATED AWAY FROM SENSITIVE AREAS AND CONFINED SO THAT NO MATERIAL(S) OR THEIR RUNOFF ENTERS WETLANDS OR WATERS OF THE U.S., WHETHER FLOWING OR DRY.

EN6. INVASIVE AQUATIC SPECIES: THE UNITED STATES ARMY CORPS OF ENGINEERS (USACE) AND THE COLORADO PARKS & WILDLIFE HAVE THE FOLLOWING CONDITIONS FOR WORK IN STREAMS. IF HEAVY EQUIPMENT IS USED THAT WAS PREVIOUSLY WORKING IN ANOTHER STREAM, RIVER, LAKE, POND OR WETLAND WITHIN 10 DAYS OF WORKING ON THIS PROJECT, ONE FO THE FOLLOWING DISINFECTION PRACTICES IS NECESSARY PRIOR TO CONSTRUCTION TO PREVENT THE SPREAD OF NEW ZEALAND MUD SNAILS AND OTHER AQUATIC HITCHHIKERS INTO THIS DRAINAGE. ALSO CLEAN ANY HAND TOOLS, BOOTS, OR OTHER EQUIPMENT THAT WILL BE SUED IN THE WATER WITH ONE OF THE BELOW METHODS. THESE PRACTICES ALSO ARE NECESSARY AFTER PROJECT COMPLETION, PRIOR TO EQUIPMENT BEING USED IN ANOTHER STREAM, RIVER, LAKE, POND OR WETLAND FOR THE SAME PURPOSE:

A. REMOVE ALL MUD AND DEBRIS FROM EQUIPMENT (TRACKS, TURRETS, BUCKETS, DRAGS, TEETH, ETC.) AND THEN KEEP EQUIPMENT DRY FOR 10 DAYS; OR

B. REMOVE ALL MUD AND DEBRIS FROM EQUIPMENT (TRACKS, TURRETS, BUCKETS, DRAGS, TEETH, ETC.) AND SPRAY/SOAK EQUIPMENT WITH A 1:1 SOLUTION OF FORMULA 409 HOUSEHOLD CLEANER AND WATER, OR A 1:15 SOLUTION OF SPARQUAT INSTITUTIONAL CLEANER AND WATER. KEEP ALL EQUIPMENT MOIST FOR AT LEAST 10 MINUTES, OR

C. REMOVE ALL MUD AND DEBRIS FROM EQUIPMENT (TRACKS, TURRETS, BUCKETS, DRAGS, TEETH, ETC.) AND SPRAY/SOAK EQUIPMENT WITH WATER GREATER THAN 130 DEGREES FAHRENHEIT FOR AT LEAST 10 MINUTES.

EN7. ONCE VEGETATION HAS BEEN COMPLETED, THE ENGINEER AND THE CONTRACTOR WILL CONDUCT A WALKTHROUGH OF THE PROJECT SITE. THE PURPOSE OF THE WALKTHROUGH IS TO IDENTIFY ANY AREAS WHERE BMPS NEED TO BE REMOVED OR MAINTAINED AND IDENTIFICATION OF RESPONSIBLE PARTY UNTIL CDPS PERMIT IS CLOSED.

PAVEMENT NOTES:

P1. PLAN QUANTITIES OF SURFACING MATERIALS ARE BASED ON THE FOLLOWING UNIT WEIGHTS AND APPLICATION RATES:

- HOT MIX ASPHALT @ 150 LBS/C.F.
- TACK COAT DILUTED EMULSIFIED ASPHALT (SLOW SETTING @ 0.10 GAL/S.Y. (DILUTED 1:1 WITH WATER)
- AGGREGATE BASE COURSE @ 135 LBS./C.F.

THE ENGINEER SHALL RESERVE THE RIGHT TO ADJUST RATES OF APPLICATION IN THE FIELD AS CONDITIONS WARRANT.

P2. TACK COAT WILL NOT BE REQUIRED FOR NEW PAVEMENT PLACED ON AN AGGREGATE BASE COURSE.

P3. SWEEP DIRT AND GRAVEL FROM THE EXISTING ASPHALT SURFACE PRIOR TO PLACING HOT MIX ASPHALT. THIS WORK WILL NOT BE MEASURED OR PAID FOR SEPARATELY, HOWEVER SHALL BE CONSIDERED SUBSIDIARY TO THE WORK.

P4. ANY LAYER OF HOT MIX ASPHALT PAVEMENT THAT IS TO HAVE A SUCCEEDING LAYER PLACED THEREON SHALL BE COMPLETED FULL WIDTH BEFORE SUCCEEDING LAYER IS PLACED.

P5. EMULSIFIED ASPHALT (SLOW SETTING) SHALL CONSIST OF 1 PART WATER AND 1 PART EMULSIFIED ASPHALT. EMULSIFIED ASPHALT (SLOW SETTING) WILL NOT BE MEASURED AND PAID FOR SEPARATELY, HOWEVER SHALL BE CONSIDERED SUBSIDIARY TO THE WORK.

P6. A TACK COAT OF EMULSIFIED ASPHALT (SLOW SETTING) IS TO BE APPLIED TO IMPROVE BOND AT THE FOLLOWING LOCATIONS:

- BEFORE PLACING NEW PAVEMENT OVER EXISTING PAVEMENT
- ALONG THE FACE OF ALL CURBS, GUTTERS, MANHOLES, ADJACENT EXISTING PAVEMENT, AND OTHER SURFACES AGAINST WHICH ASPHALT WILL BE PLACED BETWEEN PAVEMENT COURSES

P7. DUE TO THE NATURE OF THE PROJECT INCENTIVES WILL NOT BE USED FOR ASPHALT PAVEMENT SMOOTHNESS. PROVIDE A BITUMINOUS PAVER AND DEVICES IN ACCORDANCE WITH SUBSECTION 401.10 OF THE SPECIFICATIONS.

DRAINAGE NOTES

D1. THE CONTRACTOR IS REQUIRED TO KEEP ALL DRAINAGE FACILITIES FUNCTIONAL AND MAINTAIN UNOBSTRUCTED DRAINAGE FLOW TO THOSE FACILITIES AT ALL TIMES DURING CONSTRUCTION.

D2. SEE STORMWATER MANAGEMENT PLAN FOR DETAILS ON DRAINAGE AND PHASES OF DRAINAGE PROTECTION DURING THE PROJECT.

ITEM NO.	ITEM DESCRIPTION	UNIT	TOTAL UNITS
201-00001	CLEARING AND GRUBBING	AC	1
202-00001	REMOVAL OF STRUCTURE	EA	1
202-00015	REMOVAL OF HEADWALL	EA	4
202-00019	REMOVAL OF INLET	EA	3
202-00026	REMOVAL OF GROUTED RIPRAP	SY	17
202-00035	REMOVAL OF PIPE	LF	791
202-00037	REMOVAL OF END SECTION	EA	1
202-00090	REMOVAL OF DELINEATOR	EA	30
202-00200	REMOVAL OF SIDEWALK	SY	421
202-00202	REMOVAL OF GUTTER	LF	46
202-00203	REMOVAL OF CURB AND GUTTER	LF	203
202-00206	REMOVAL OF CONCRETE CURB RAMP	SY	21
202-00210	REMOVAL OF CONCRETE PAVEMENT	SY	84
202-00220	REMOVAL OF ASPHALT MAT	SY	1100
202-00240	REMOVAL OF ASPHALT MAT (PLANING)	SY	10010
202-01035	REMOVAL OF GATE	EA	1
202-04002	CLEAN CULVERT	EA	1
202-05006	SAWING CONCRETE MATERIAL (6 INCH)	LF	48
202-05026	SAWING ASPHALT MATERIAL (6 INCH)	LF	1630
203-00010	UNCLASSIFIED EXCAVATION (CIP)	CY	1034
203-00060	EMBANKMENT MATERIAL (CIP)	CY	710
207-00205	TOPSOIL	CY	310
208-00002	EROSION LOG TYPE 1 (12 INCH)	LF	1425
208-00035	AGGREGATE BAG	LF	288
208-00046	PRE-FABRICATED CONCRETE WASHOUT STRUCTURE	EA	3
208-00051	STORM DRAIN INLET PROTECTION (TYPE I) (5 FT, INITIAL)	EA	1
208-00052	STORM DRAIN INLET PROTECTION (TYPE II) (5 FT, INTERIM)	EA	1
208-00070	VEHICLE TRACKING PAD	EA	1
208-00103	REMOVAL AND DISPOSAL OF SEDIMENT (LABOR)	HR	40
208-00105	REMOVAL AND DISPOSAL OF SEDIMENT (EQUIPMENT)	HR	40
208-00106	SWEEPING (SEDIMENT REMOVAL)	HR	40
208-00207	EROSION CONTROL MANAGEMENT	DAY	75
210-00810	RESET GROUND SIGN	EA	8
210-01000	RESET FENCE	LF	84
210-04010	ADJUST MH (LID ELEVATIONS)	EA	5
210-04050	ADJUST VALVE BOX	EA	2
212-00708	SEEDING (NATIVE)(BROADCAST)	AC	0.72
212-00032	SOIL CONDITIONING	AC	0.72
213-00004	MULCH (WEED FREE STRAW)	AC	0.3

ITEM NO.	ITEM DESCRIPTION	UNIT	TOTAL UNITS
213-00061	MULCH TACKIFIER	LB	5
213-00700	LANDSCAPE BOULDER (20"-24")	EA	10
216-00201	SOIL RETENTION BLANKET (STRAW/COCONUT) (BIODEGRADABLE CLASS 1)	SY	1272
304-06007	AGGREGATE BASE COURSE (CLASS 6)	TON	381
304-09014	STABILIZED CRUSHER FINES MATERIAL	CY	36
310-00610	FULL DEPTH RECLAMATION OF HOT MIX PAVEMENT (8-12")	SY	3545
403-00720	HOT MIX ASPHALT (PATCHING) (ASPHALT)	TON	400
403-32621	HOT MIX ASPHALT (GRADING S) (50) (PG 58-28)	TON	1196
403-34621	HOT MIX ASPHALT (GRADING SX) (50) (PG 58-28)	TON	1528
412-00600	CONCRETE PAVEMENT (6")	SY	77
412-01255	CONCRETE PAVEMENT (12")(SPECIAL)	SY	100
420-00200	GEOTEXTILE (WEED BARRIER)	SY	1251
506-00030	GROUTED RIPRAP (12 INCH)	CY	6
506-00406	SOIL RIPRAP (6 INCH) (TYPE VL)	CY	75
506-00409	SOIL RIPRAP (9 INCH) (TYPE L)	CY	290
506-00412	SOIL RIPRAP (12 INCH) (TYPE M)	CY	233
507-00200	DRY RUBBLE S AND D PAVE (RIVER ROCK)	CY	8
603-01185	18 INCH REINFORCED CONCRETE PIPE (COMPLETE IN PLACE)	LF	160
603-01245	24 INCH REINFORCED CONCRETE PIPE (COMPLETE IN PLACE)	LF	180
603-02245	30x19 INCH REINFORCED CONCRETE PIPE ELLIPTICAL (COMPLETE IN PLACE)	LF	80
603-02306	38x24 INCH REINFORCED CONCRETE PIPE ELLIPTICAL (COMPLETE IN PLACE)	LF	172
603-05124	30x19 INCH REINFORCED CONCRETE END SECTION ELLIPTICAL	EA	2
603-05130	38x24 INCH REINFORCED CONCRETE END SECTION ELLIPTICAL	EA	3
603-10180	18 INCH CORRUGATED STEEL PIPE (PATCH)	LF	16
604-00305	INLET TYPE C (5 FOOT)	EA	1
604-00505	INLET TYPE D (5 FOOT)	EA	2
604-16005	INLET TYPE 16 (5 FOOT) (DENVER TYPE 16) (SINGLE) (TYPE L GRATE)	EA	1
604-30010	MANHOLE SLAB BASE (48" DIA) (10 FOOT)	EA	1
604-30010	MANHOLE SLAB BASE (60" DIA) (10 FOOT)	EA	2
604-30010	MANHOLE SLAB BASE (72" DIA) (10 FOOT)	EA	2
604-50003	INLET GRATING AND FRAME TYPE C (CLOSE MESH GRATE)	EA	1
604-50050	INLET GRATING AND FRAME SPECIAL (CLOSE MESH GRATE)	EA	2
604-50200	MANHOLE RING AND COVER	EA	5
607-52905	END POST (CHAIN LINK)	EA	4
608-00006	CONCRETE SIDEWALK (6 INCH)	SY	1001
608-00010	CONCRETE CURB RAMP	SY	42
608-00015	DETECTABLE WARNINGS (PAVERS)	SF	112
609-21020	CURB AND GUTTER TYPE 2 (SPECIAL) (24")	LF	787
609-24006	GUTTER TYPE 2 (6 FOOT)	SY	27

ITEM NO.	ITEM DESCRIPTION	UNIT	TOTAL UNITS
610-00024	MEDIAN COVER MATERIAL (4" PATTERNED CONCRETE)(COLORED)	SF	424
612-00039	DELINEATOR (FLEXIBLE) (SURFACE MOUNTED)	EA	8
612-00113	DELINEATOR (DRIVABLE) (TYPE III)	EA	7
614-00011	SIGN PANEL (CLASS I) (R7-1D) (12" X 18")(PARKING)	SF	3
614-00011	SIGN PANEL (CLASS I) (R7-3)(12" X 18")(CUSTOM)(PARKING)	SF	3
614-00012	SIGN PANEL (CLASS II) (S1-1) (36" X 36")(CROSSING)	SF	9
614-00012	SIGN PANEL (CLASS II) (W16-7) (18" X 30")(CROSSING)	SF	4
620-00020	SANITARY FACILITY	EA	2
622-00270	BOLLARD (STANDARD STEEL)	EA	4
622-00270	BOLLARD (FOLDABLE, LOCKABLE)	EA	2
625-00000	CONSTRUCTION SURVEYING	LS	1
626-00001	MOBILIZATION (SPECIAL) (PHASE 1)	LS	1
626-00002	MOBILIZATION (SPECIAL) (PHASE 2)	LS	1
627-00008	MODIFIED EPOXY PVMT MKG (WHITE)	GAL	9
627-00008	MODIFIED EPOXY PVMT MKG (YELLOW)	GAL	5
627-00008	MODIFIED EPOXY PVMT MKG (GREEN)	GAL	2
627-00070	THERMOPLASTIC PAVEMENT MARKING (WHITE)	SF	620
630-00000	FLAGGING	HOUR	2500
630-00007	TRAFFIC CONTROL INSPECTION	DAY	40
630-00012	TRAFFIC CONTROL MANAGEMENT	DAY	75
630-10005	CONSTRUCTION ZONE TRAFFIC CONTROL	LS	1
630-80344	CONSTRUCTION TRAFFIC SIGN (SPECIAL)(PROJECT INFO)	EA	2
630-80348	CONSTRUCTION INFORMATION SIGN	EA	2
630-80355	PORTABLE MESSAGE SIGN PANEL	EA	2
FORCE ACCOUNT ITEMS			
700-70010	F/A MINOR CONTRACT REVISIONS	FA	1
700-70170	F/A POTHOLE UTILITIES	FA	1
700-70380	F/A EROSION CONTROL	FA	1

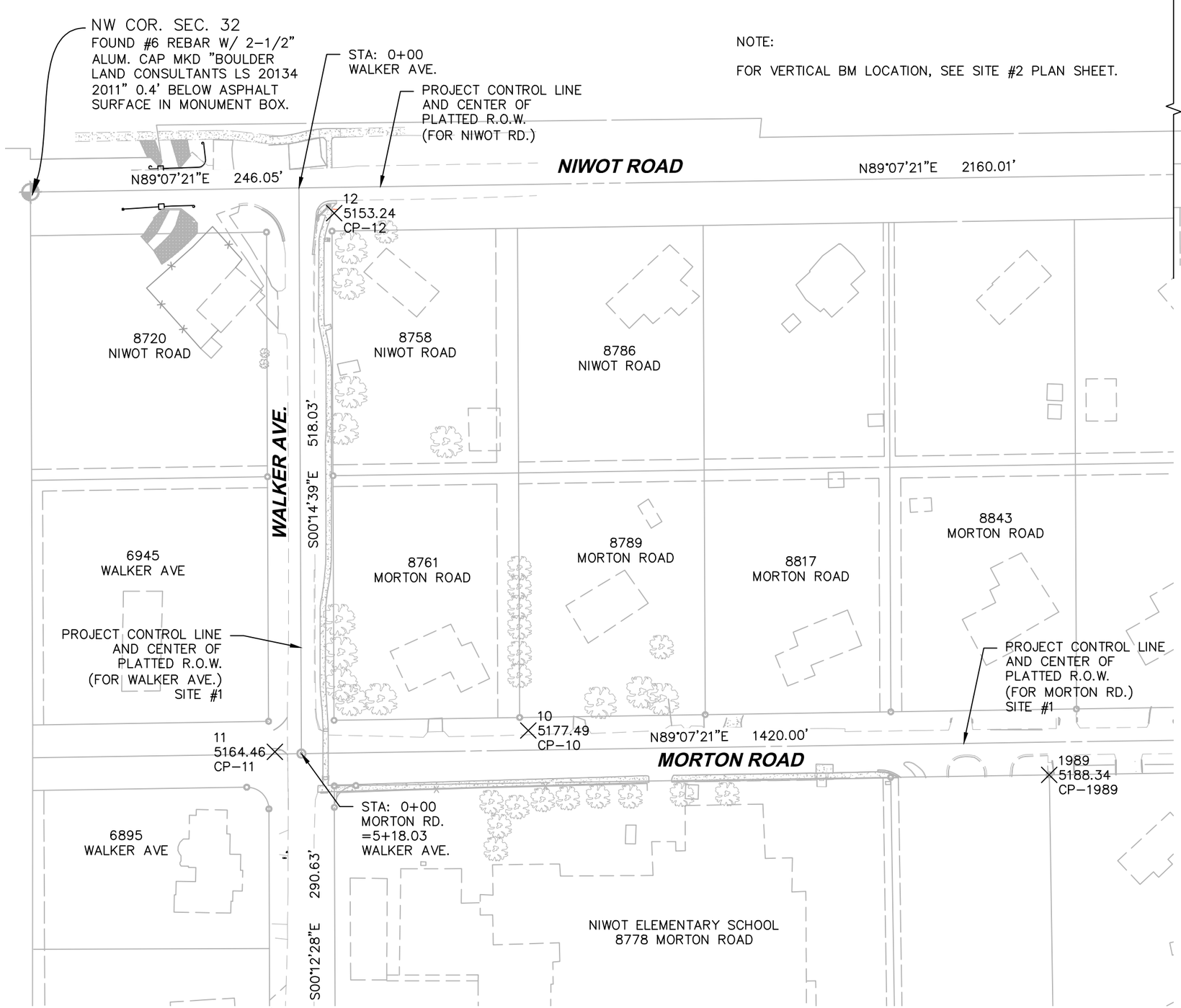

NOTE:

FOR VERTICAL BM LOCATION, SEE SITE #2 PLAN SHEET.

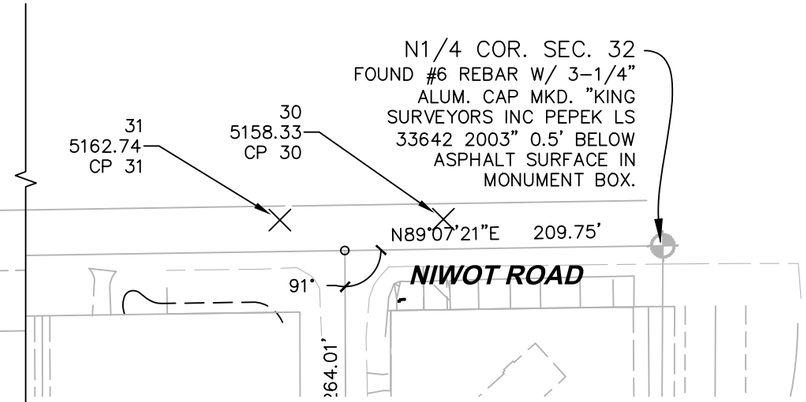

SURVEY NOTES:

1. BEARINGS SHOWN ON THIS MAP ARE BASED ON THE ASSUMPTION THAT THE NORTH LINE OF THE NW1/4 OF SECTION 32, T2N, R69W OF THE 6TH P.M. BEARS N89°07'21"E AS MONUMENTED AND SHOWN HEREON. THIS BEARING IS RELATIVE TO THE NORTH LINE OF OUTLOT E AND LOT 12 OF SECOND ADDITION TO MORTON HEIGHTS SUBDIVISION AS SHOWN ON ALTA/NSPS LAND TITLE SURVEY PREPARED BY EHRHART LAND SURVEYING DATED APRIL 14, 2016.

2. THE PRIMARY BENCH MARK USED TO DETERMINE THE BASIS OF ELEVATIONS FOR THIS MAP IS CP-1, A CHISELED "+" IN TOP OF CURB IN SOUTH PARKING LOT OF NIWOT ELEMENTARY SCHOOL AS SHOWN ON ALTA/NSPS LAND TITLE SURVEY PREPARED BY EHRHART LAND SURVEYING DATED APRIL 14, 2016. NAVD 1988 ELEVATION = 5186.70 FEET. ELEVATION CHECK WAS MADE TO NSRS STATION TESSAR, A STAINLESS STEEL ROD IN LOGO BOX MARKED "TESSAR 1999". NAVD 1988 ELEVATION = 5348.99 FEET.

3. EASEMENTS SHOWN ON THIS MAP ARE BASED ON POSITIONS SHOWN ON EXISTING SUBDIVISION PLATS. NO ADDITIONAL RESEARCH WAS PROVIDED.

4. THE POSITIONS OF UNDERGROUND UTILITY LINES SHOWN IN THIS DRAWING SET WERE DETERMINED FROM:

   A. FIELD SURVEY – UTILITY LINES WERE MARKED ON THE GROUND BY UNDERGROUND CONSULTING SERVICES, INC., AND BEST AVAILABLE INFORMATION.

   B. THE EXISTING UTILITIES FOR SITE #1, WERE FIELD LOCATED AND 20 EXPLORATORY DRILLINGS WERE CONDUCTED BY ACT UNDERGROUND, LLC. THE EXISTING UTILITY LINE WORK SHOWN IN THIS PLAN SET WAS EDITED, BY BOULDER COUNTY SO THAT IT WOULD MATCH THE LOCATED UTILITY LINE LOCATIONS.

   C. GOODBEE AND ASSOCIATES WAS CONTRACTED IN ORDER TO CONFIRM THAT THIS PROJECT IS COMPLIANT WITH THE RECENTLY ENACTED UNDERGROUND UTILITY LAWS SB-167 AND ASCE 38.

5. ACCORDING TO COLORADO LAW, THE UTILITY NOTIFICATION CENTER OF COLORADO (UNCC) MUST BE NOTIFIED TO MARK ALL UNDERGROUND LINES AT LEAST THREE DAYS PRIOR ANY EXCAVATION OR CONSTRUCTION. CONTRACTOR SHALL CALL 811 OR 1-800-922-1987.

6. FIELD WORK WAS COMPLETED ON OCTOBER 4, 2017 AND MARCH 2, 2018. FIELD SURVEY WAS CONDUCTED BY CIVIL ARTS, LONGMONT CO 80501.

7. LINEAR DIMENSIONS SHOWN ON THIS MAP ARE U.S. SURVEY FEET.

FOR CONSTRUCTION

CALL UTILITY NOTIFICATION CENTER OF COLORADO
811
CALL 2-BUSINESS DAYS IN ADVANCE BEFORE YOU DIG, GRADE, OR EXCAVATE FOR THE MARKING OF UNDERGROUND MEMBER UTILITIES

REVISIONS:	NO.	DATE	REVISION DESCRIPTION:

BOULDER COUNTY PUBLIC WORKS
ENGINEERING DIVISION

DESIGNED:	CAD/C3D:	CHECKED:	DATE:
RL	RL	DW	07/30/2021

MORTON HEIGHTS-2021

SURVEY CONTROL (1)

PROJECT NO: **RS-MOR-001** SHEET NO: **11**

C:\AUTOCAD\PROJECTS\MORTON HEIGHTS\PLAN SET\MORTON-HEIGHTS-SURVEY CONTROL 21 FEB 2018.DWG LAST PLOTTED 7/30/2021 12:12 PM

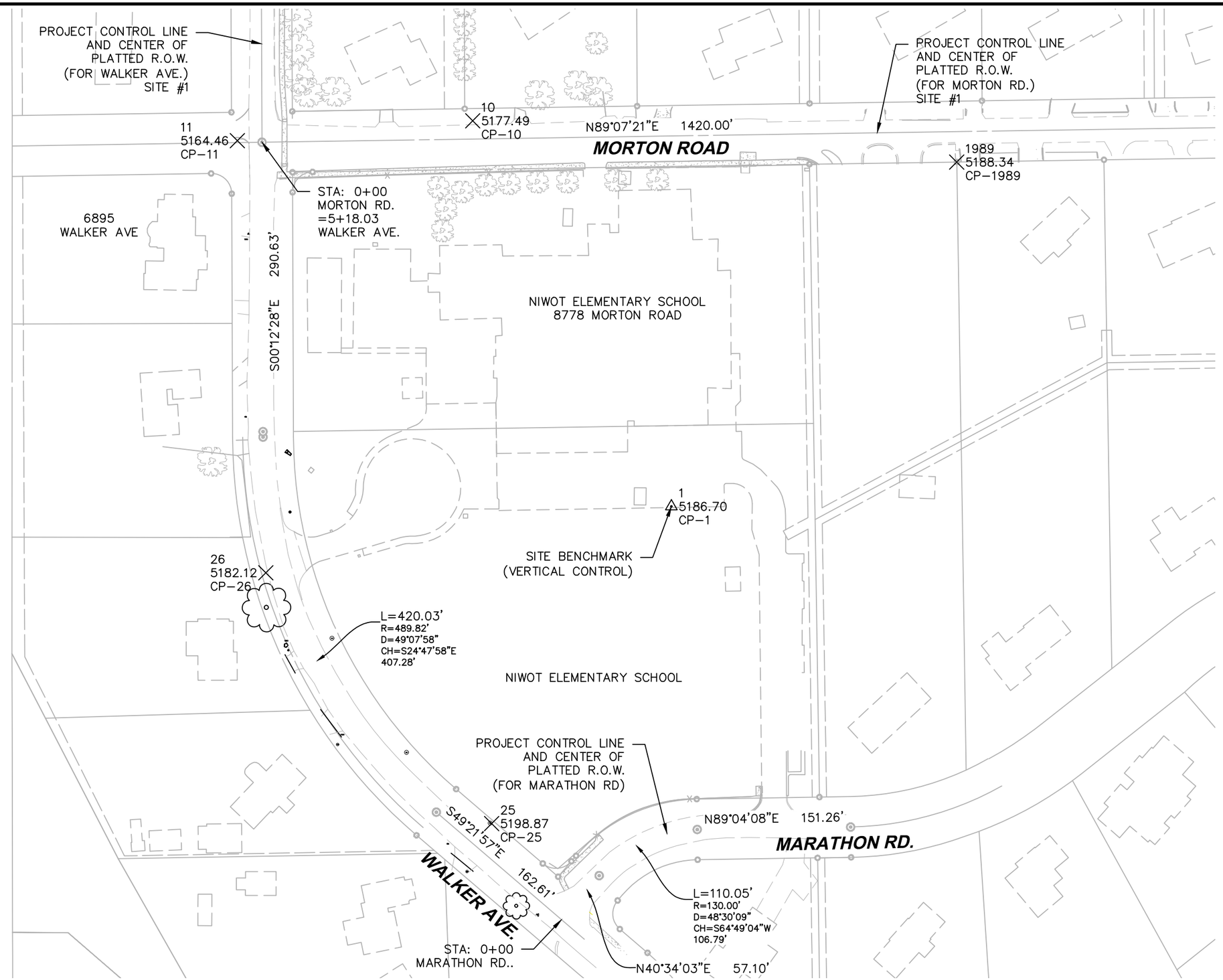

0 100 200

HORIZONTAL SCALE: 1"=100'

N

FOR CONSTRUCTION

CALL UTILITY NOTIFICATION CENTER OF COLORADO

811

CALL 2-BUSINESS DAYS IN ADVANCE BEFORE YOU DIG, GRADE, OR EXCAVATE FOR THE MARKING OF UNDERGROUND MEMBER UTILITIES

REVISIONS:	NO.	DATE	REVISION DESCRIPTION:

BOULDER COUNTY PUBLIC WORKS
ENGINEERING DIVISION

DESIGNED:	CAD/C3D:	CHECKED:	DATE:
RL	RL	DW	07/30/2021

MORTON HEIGHTS-2021

SURVEY CONTROL (2)

PROJECT NO: **RS-MOR-001** SHEET NO: **12**

C:\AUTOCAD\PROJECTS\MORTON HEIGHTS\PLAN SET\MORTON-HEIGHTS-SURVEY CONTROL 21 FEB 2018.DWG LAST PLOTTED 7/30/2021 12:12 PM

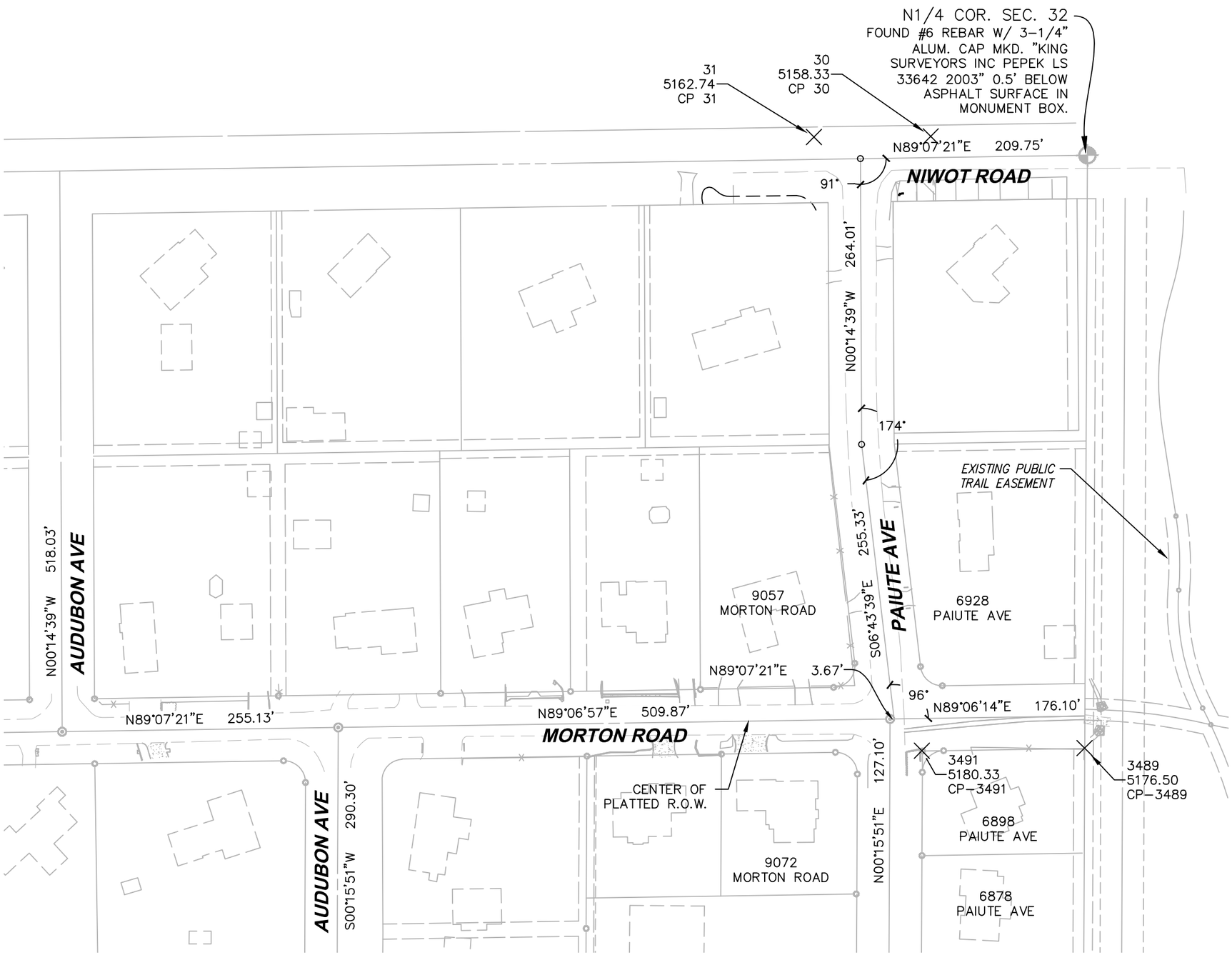

Point Table

Point #	Elevation	Northing	Easting	Description
1	5186.70	1279176.85	3098556.18	CP-1
10	5177.49	1279556.95	3098360.35	CP-10
11	5164.46	1279537.39	3098128.32	CP-11
12	5153.24	1280030.71	3098182.57	CP-12
13	5127.18	1280084.77	3097574.21	CP-13
14	5110.53	1280102.14	3096567.23	CP-14
15	5145.35	1279402.17	3096557.59	CP-15
16	5159.64	1278902.91	3096599.38	CP-16
17	5182.41	1278369.40	3096608.61	CP-17
18	5197.09	1278372.40	3096949.24	CP-18
19	5209.78	1278375.20	3097780.11	CP-19
20	5207.16	1278404.64	3097980.47	CP-20
21	5197.07	1278571.47	3098155.33	CP-21
22	5209.64	1278400.46	3098271.98	CP-22
23	5224.39	1278411.43	3098538.69	CP-23
24	5216.34	1278546.08	3098595.46	CP-24
25	5198.87	1278864.22	3098378.99	CP-25
26	5182.12	1279111.50	3098156.42	CP-26
30	5158.33	1280107.63	3100375.06	CP 30
31	5162.74	1280107.02	3100267.13	CP 31
1989	5188.34	1279516.28	3098837.47	CP-1989
3489	5176.50	1279542.43	3100517.20	CP-3489
3491	5180.33	1279539.96	3100366.86	CP-3491

NOTE:

1. ORIGINAL FIELD SURVEY WAS CONDUCTED WITH SITE #1, BY CIVIL ARTS.
2. SEE SURVEY NOTES ON SHEET 11.

0 100 200
HORIZONTAL SCALE: 1"=100'

N

FOR CONSTRUCTION

CALL UTILITY NOTIFICATION CENTER OF COLORADO
811
CALL 2-BUSINESS DAYS IN ADVANCE BEFORE YOU DIG, GRADE, OR EXCAVATE FOR THE MARKING OF UNDERGROUND MEMBER UTILITIES

REVISIONS: NO.	DATE	REVISION DESCRIPTION:

BOULDER COUNTY PUBLIC WORKS
ENGINEERING DIVISION

DESIGNED:	CAD/C3D:	CHECKED:	DATE:
RL	RL	DW	07/30/2021

MORTON HEIGHTS-2021
SURVEY CONTROL (3)
PROJECT NO: **RS-MOR-001** SHEET NO: **13**

C:\AUTOCAD\PROJECTS\MORTON HEIGHTS\PLAN SET\MORTON-HEIGHTS-SURVEY CONTROL 21 FEB 2018.DWG LAST PLOTTED 7/30/2021 12:12 PM

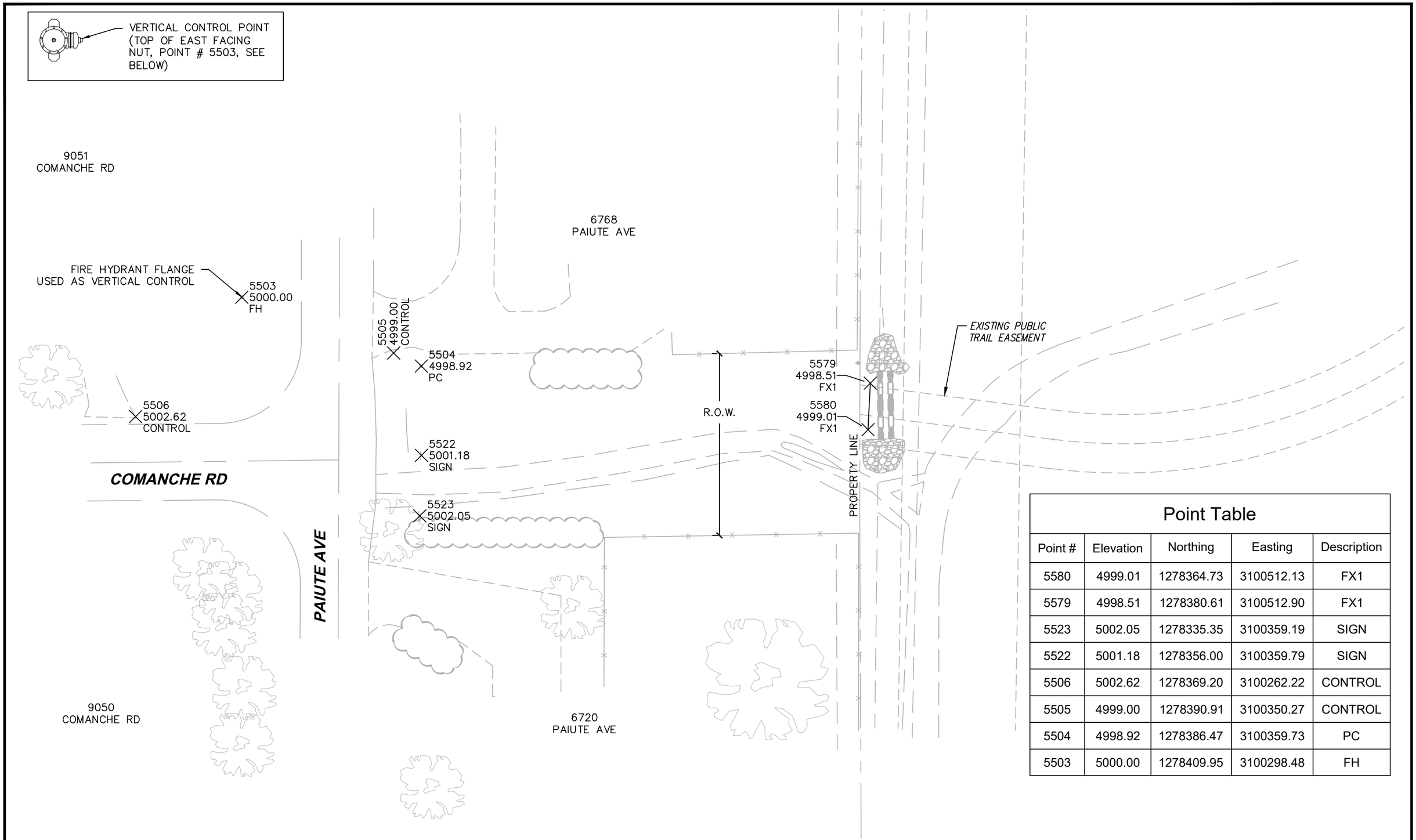

Point Table

Point #	Elevation	Northing	Easting	Description
5580	4999.01	1278364.73	3100512.13	FX1
5579	4998.51	1278380.61	3100512.90	FX1
5523	5002.05	1278335.35	3100359.19	SIGN
5522	5001.18	1278356.00	3100359.79	SIGN
5506	5002.62	1278369.20	3100262.22	CONTROL
5505	4999.00	1278390.91	3100350.27	CONTROL
5504	4998.92	1278386.47	3100359.73	PC
5503	5000.00	1278409.95	3100298.48	FH

0 30 60
HORIZONTAL SCALE: 1"=30'

N

FOR CONSTRUCTION

CALL UTILITY NOTIFICATION CENTER OF COLORADO
811
CALL 2-BUSINESS DAYS IN ADVANCE BEFORE YOU DIG, GRADE, OR EXCAVATE FOR THE MARKING OF UNDERGROUND MEMBER UTILITIES

REVISIONS: NO.	DATE	REVISION DESCRIPTION:

BOULDER COUNTY PUBLIC WORKS
ENGINEERING DIVISION

DESIGNED:	CAD/C3D:	CHECKED:	DATE:
RL	RL	DW	07/30/2021

MORTON HEIGHTS-2021
SURVEY CONTROL (4)
PROJECT NO: **RS-MOR-001** SHEET NO: **14**

C:\AUTOCAD\PROJECTS\MORTON HEIGHTS\PLAN SET\COMANCHE RD-SURVEY CONTROL 29 JAN 2019.DWG LAST PLOTTED 7/30/2021 12:12 PM

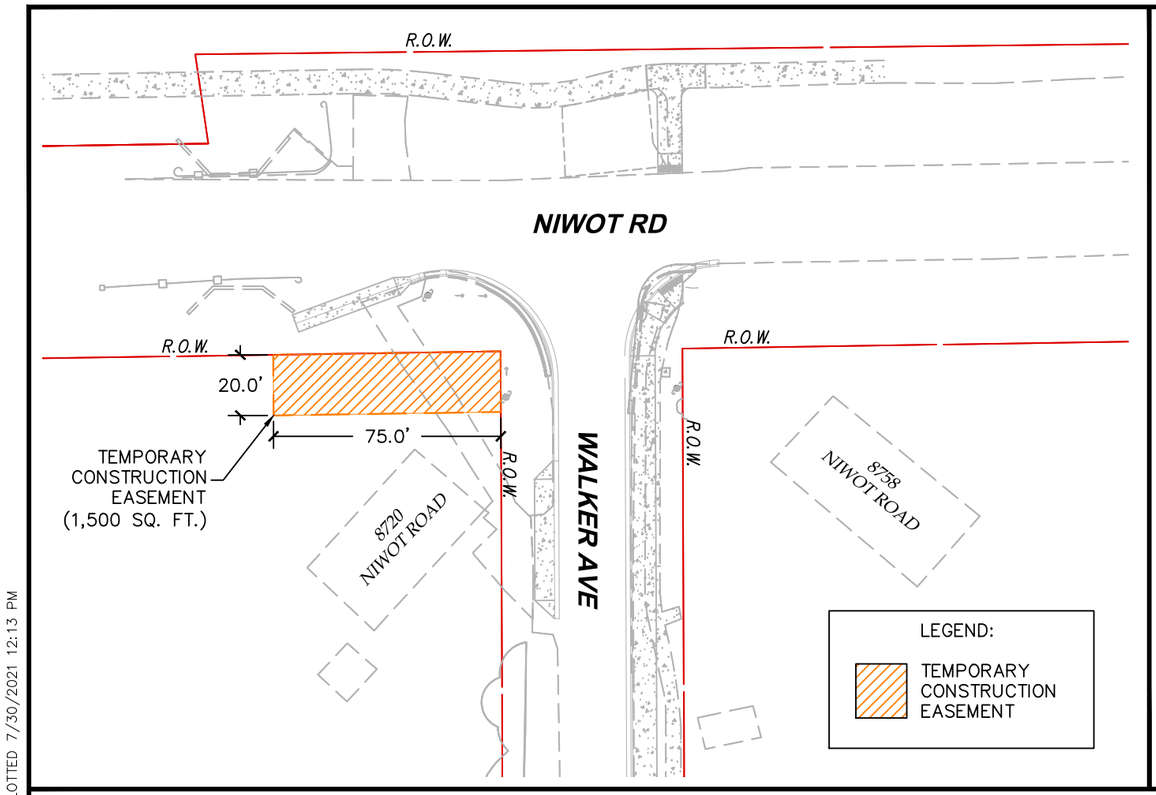

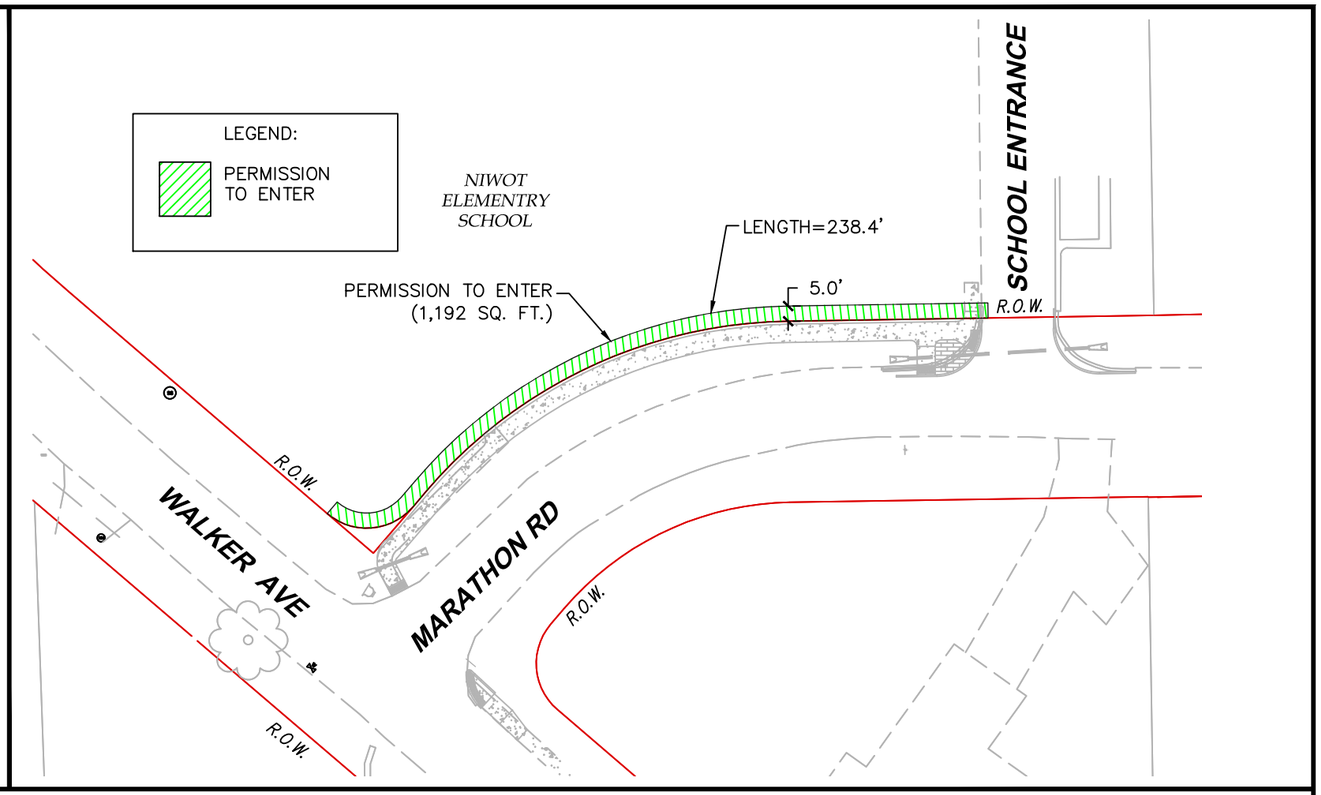

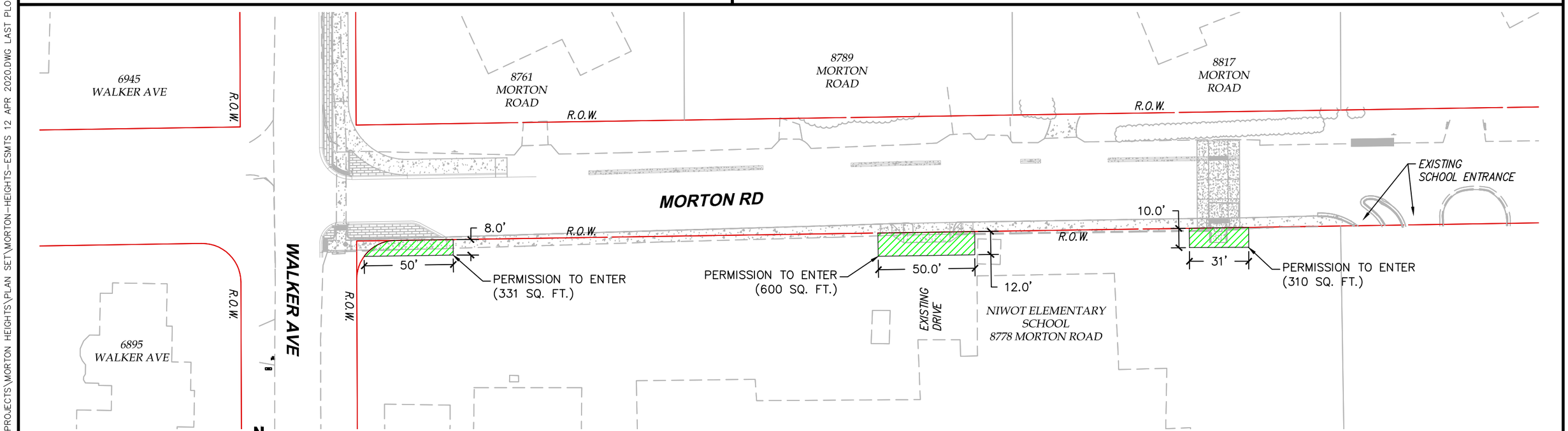

FOR CONSTRUCTION

CALL UTILITY NOTIFICATION CENTER OF COLORADO
811
CALL 2-BUSINESS DAYS IN ADVANCE BEFORE YOU DIG, GRADE, OR EXCAVATE FOR THE MARKING OF UNDERGROUND MEMBER UTILITIES

REVISIONS: NO.	DATE	REVISION DESCRIPTION:

BOULDER COUNTY PUBLIC WORKS
ENGINEERING DIVISION

DESIGNED:	CAD/C3D:	CHECKED:	DATE:
RL	RL	DW	07/30/2021

MORTON HEIGHTS-2021

TEMP CONSTRUCTION EASEMENTS (1)

PROJECT NO: **RS-MOR-001** SHEET NO: **15**

C:\AUTOCAD\PROJECTS\MORTON HEIGHTS\PLAN SET\MORTON-HEIGHTS-ESMTS 12 APR 2020.DWG LAST PLOTTED 7/30/2021 12:13 PM

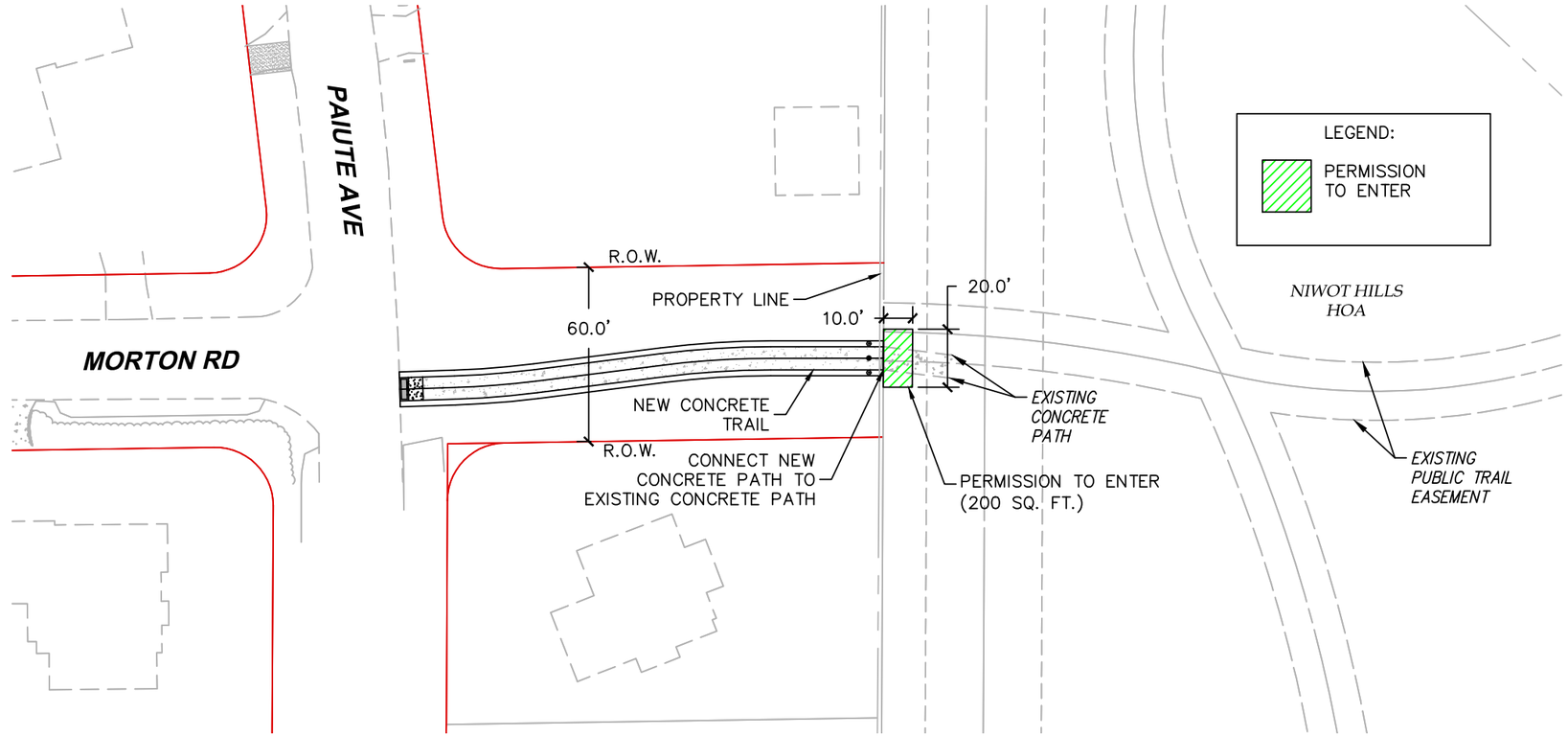

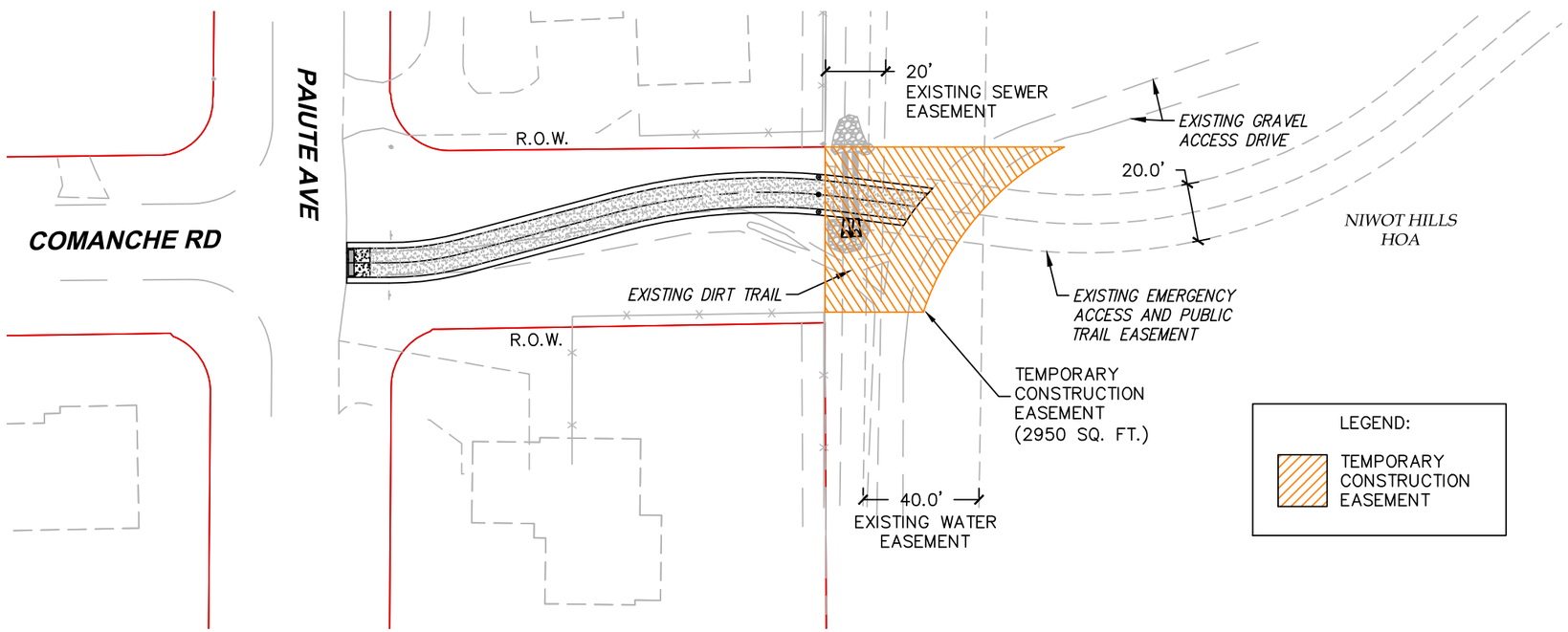

N

0 50 100

HORIZONTAL SCALE: 1"=50'

FOR CONSTRUCTION

CALL UTILITY NOTIFICATION CENTER OF COLORADO

811

CALL 2-BUSINESS DAYS IN ADVANCE BEFORE YOU DIG, GRADE, OR EXCAVATE FOR THE MARKING OF UNDERGROUND MEMBER UTILITIES

REVISIONS:	NO.	DATE	REVISION DESCRIPTION:

BOULDER COUNTY PUBLIC WORKS
ENGINEERING DIVISION

DESIGNED:	CAD/C3D:	CHECKED:	DATE:
RL	RL	DW	07/30/2021

MORTON HEIGHTS-2021

TEMP CONSTRUCTION EASEMENTS (2)

PROJECT NO: **RS-MOR-001** SHEET NO: **16**

C:\AUTOCAD\PROJECTS\MORTON HEIGHTS\PLAN SET\MORTON-HEIGHTS-ESMTS 12 APR 2020.DWG LAST PLOTTED 7/30/2021 12:13 PM

LEGEND:

QUALITY LEVEL "A"

W(A) — POTABLE WATER
OWNER: LEFTHAND WATER DISTRICT

G(A) — NATURAL GAS
OWNER: XCEL ENERGY

QUALITY LEVEL "B"

T(B) — TELEPHONE (COMMUNICATIONS)
OWNER: CENTURYLINK

COMMUNICATIONS DUCT BANK
OWNER: CENTRYLINK

FO(B) — FIBER OPTIC
OWNER: ZAYO BANDWIDTH

TC(B) — TRAFFIC SIGNAL CONTROL (ELECTRICAL) OWNER: BOULDER COUNTY

G(B) — NATURAL GAS
OWNER: XCEL ENERGY

STORM SEWER
OWNER: BOULDER COUNTY

QUALITY LEVEL "C"

SS(C) — SANITARY SEWER
OWNER: NIWOT SANITATION DISTRICT

OE — OVERHEAD ELECTRICAL
OWNER: XCEL ENERGY
OWNER: UNITE PRIVATE NETWORKS,
(NOTE: FIBER OPTIC LINES, OVERHEAD)

QUALITY LEVEL "D"

G(D) — NATURAL GAS
OWNER: XCEL ENERGY

W(D) — POTABLE WATER
OWNER: LEFTHAND WATER DISTRICT

T(D) — TELEPHONE (COMMUNICATIONS)
OWNER: CENTURYLINK

AMERICAN SOCIETY OF CIVIL ENGINEERS (ASCE) 38-02

STANDARD GUIDELINE FOR THE COLLECTION AND DEPICTION OF EXISTING SUBSURFACE UTILITY DATA.

UTILITY QUALITY LEVELS

A PROFESSIONAL OPINION OF THE QUALITY AND RELIABILITY OF UTILITY INFORMATION. SUCH RELIABILITY IS DETERMINED BY THE MEANS AND METHODS OF THE PROFESSIONAL. EACH OF THE FOUR EXISTING UTILITY DATA QUALITY LEVELS IS ESTABLISHED BY DIFFERENT METHODS OF DATA COLLECTION AND INTERPRETATION.

UTILITY QUALITY LEVEL A

PRECISE HORIZONTAL AND VERTICAL LOCATION OF UTILITIES OBTAINED BY THE ACTUAL EXPOSURE (OR VERIFICATION OF PREVIOUSLY EXPOSED AND SURVEYED UTILITIES) AND SUBSEQUENT MEASUREMENT OF SUBSURFACE UTILITIES, USUALLY AT A SPECIFIC POINT. MINIMALLY INTRUSIVE EXCAVATION EQUIPMENT IS TYPICALLY USED TO MINIMIZE THE POTENTIAL FOR UTILITY DAMAGE. A PRECISE HORIZONTAL AND VERTICAL LOCATION, AS WELL AS OTHER UTILITY ATTRIBUTES, IS SHOWN ON PLAN DOCUMENTS. ACCURACY IS TYPICALLY SET TO 15-MM VERTICAL AND TO APPLICABLE HORIZONTAL SURVEY AND MAPPING ACCURACY AS DEFINED OR EXPECTED BY THE PROJECT OWNER.

UTILITY QUALITY LEVEL B

INFORMATION OBTAINED THROUGH THE APPLICATION OF APPROPRIATE SURFACE GEOPHYSICAL METHODS TO DETERMINE THE EXISTENCE AND APPROXIMATE HORIZONTAL POSITION OF SUBSURFACE UTILITIES. QUALITY LEVEL B DATA SHOULD BE REPRODUCIBLE BY SURFACE GEOPHYSICS AT ANY POINT OF THEIR DEPICTION. THIS INFORMATION IS SURVEYED TO APPLICABLE TOLERANCES DEFINED BY THE PROJECT AND REDUCED ONTO PLAN DOCUMENTS.

UTILITY QUALITY LEVEL C

INFORMATION OBTAINED BY SURVEYING AND PLOTTING VISIBLE ABOVE-GROUND UTILITY FEATURES AND BY USING PROFESSIONAL JUDGMENT IN CORRELATING THIS INFORMATION TO QUALITY LEVEL D INFORMATION.

UTILITY QUALITY LEVEL D

INFORMATION DERIVED FROM EXISTING RECORDS OR ORAL RECOLLECTIONS.

NOTES:

1. CONTRACTOR SHALL CALL 811 (1-800-922-1987) FOR UTILITY LOCATES PRIOR TO ANY EXCAVATION.
2. THIS DRAWING IS FOR INFORMATION ONLY.

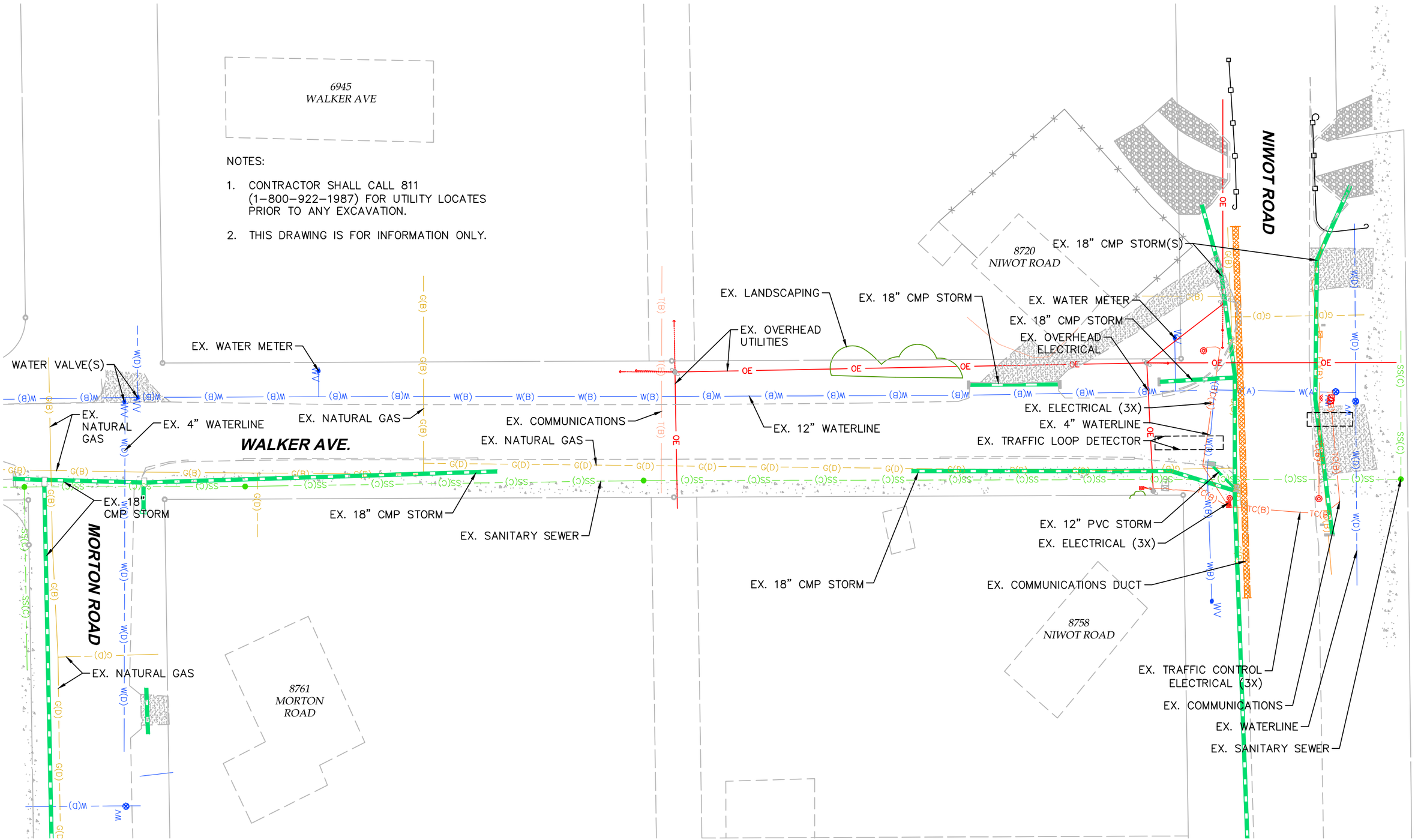

0 40 80
HORIZONTAL SCALE: 1"=40'

N

FOR CONSTRUCTION

CALL UTILITY NOTIFICATION CENTER OF COLORADO
811
CALL 2-BUSINESS DAYS IN ADVANCE BEFORE YOU DIG, GRADE, OR EXCAVATE FOR THE MARKING OF UNDERGROUND MEMBER UTILITIES

REVISIONS: NO.	DATE	REVISION DESCRIPTION:

BOULDER COUNTY PUBLIC WORKS
ENGINEERING DIVISION

DESIGNED:	CAD/C3D:	CHECKED:	DATE:
RL	RL	DW	07/30/2021

MORTON HEIGHTS-2021

EXISTING UTILITIES (1)

PROJECT NO: **RS-MOR-001** SHEET NO: **18**

C:\AUTOCAD\PROJECTS\MORTON HEIGHTS\PLAN SET\MORTON-HEIGHTS-UTILITIES 23 FEB 2018.DWG LAST PLOTTED 7/30/2021 12:13 PM

NOTES:

1. CONTRACTOR SHALL CALL 811 (1-800-922-1987) FOR UTILITY LOCATES PRIOR TO ANY EXCAVATION.
2. THIS DRAWING IS FOR INFORMATION ONLY.

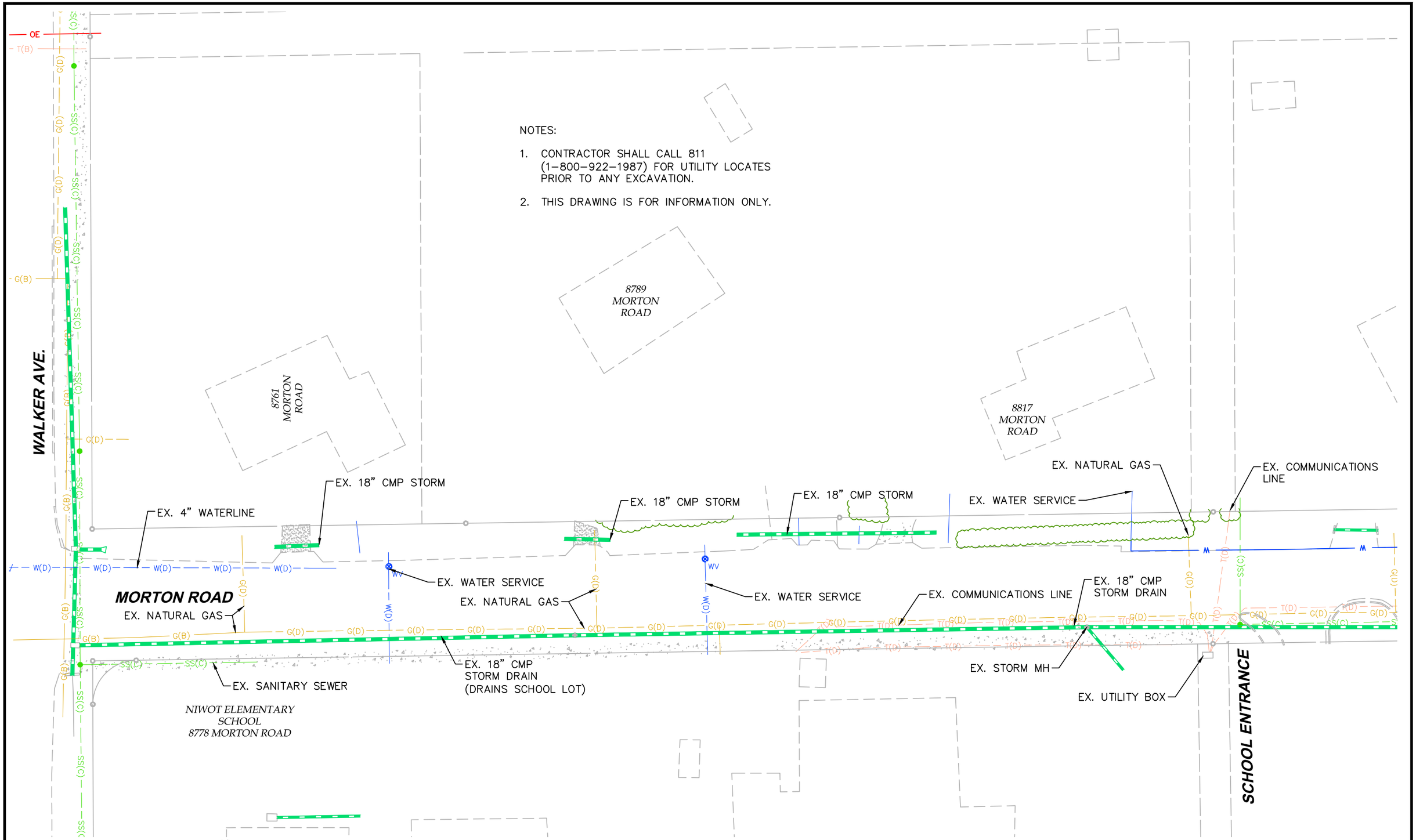

0 40 80
HORIZONTAL SCALE: 1"=40'

N

FOR CONSTRUCTION

CALL UTILITY NOTIFICATION CENTER OF COLORADO
811
CALL 2-BUSINESS DAYS IN ADVANCE BEFORE YOU DIG, GRADE, OR EXCAVATE FOR THE MARKING OF UNDERGROUND MEMBER UTILITIES

REVISIONS: NO.	DATE	REVISION DESCRIPTION:

BOULDER COUNTY PUBLIC WORKS
ENGINEERING DIVISION

DESIGNED:	CAD/C3D:	CHECKED:	DATE:
RL	RL	DW	07/30/2021

MORTON HEIGHTS-2021

EXISTING UTILITIES (2)

PROJECT NO: **RS-MOR-001** SHEET NO: **19**

C:\AUTOCAD\PROJECTS\MORTON HEIGHTS\PLAN SET\MORTON-HEIGHTS-UTILITIES 23 FEB 2018.DWG LAST PLOTTED 7/30/2021 12:13 PM

NOTES:

1. CONTRACTOR SHALL CALL 811 (1-800-922-1987) FOR UTILITY LOCATES PRIOR TO ANY EXCAVATION.
2. THIS DRAWING IS FOR INFORMATION ONLY.
3. SUBSURFACE UTILITY ENGINEERING (S.U.E.) REPORT IS AVAILABLE UPON REQUEST FOR THIS AREA.

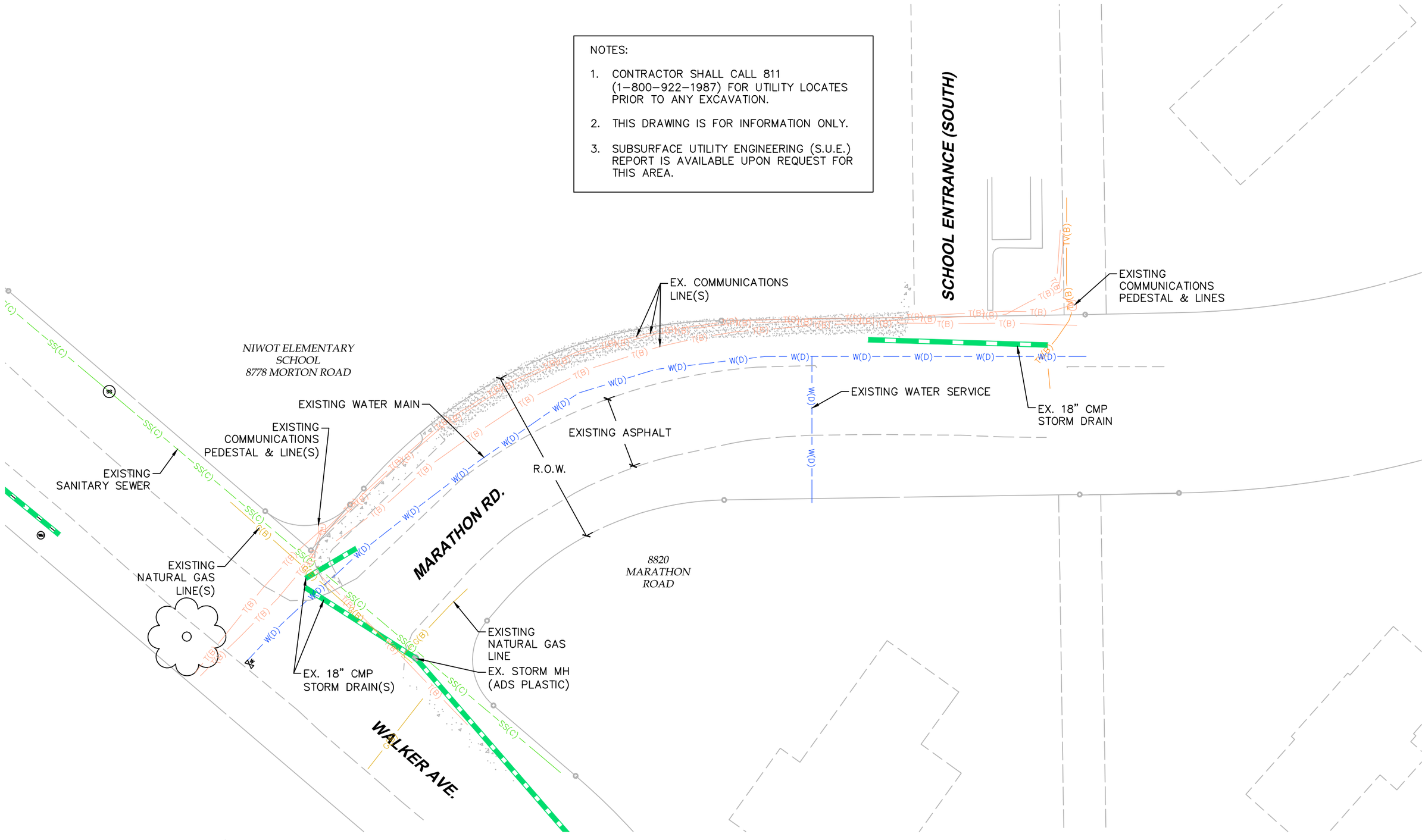

0 30 60

HORIZONTAL SCALE: 1"=30'

N

FOR CONSTRUCTION

CALL UTILITY NOTIFICATION CENTER OF COLORADO

811

CALL 2-BUSINESS DAYS IN ADVANCE BEFORE YOU DIG, GRADE, OR EXCAVATE FOR THE MARKING OF UNDERGROUND MEMBER UTILITIES

REVISIONS:	NO.	DATE	REVISION DESCRIPTION:

BOULDER COUNTY PUBLIC WORKS
ENGINEERING DIVISION

DESIGNED:	CAD/C3D:	CHECKED:	DATE:
RL	RL	DW	07/30/2021

MORTON HEIGHTS-2021

EXISTING UTILITIES (3)

PROJECT NO: **RS-MOR-001** SHEET NO: **20**

C:\AUTOCAD\PROJECTS\MORTON HEIGHTS\PLAN SET\MORTON-HEIGHTS-UTILITIES 23 FEB 2018.DWG LAST PLOTTED 7/30/2021 12:13 PM

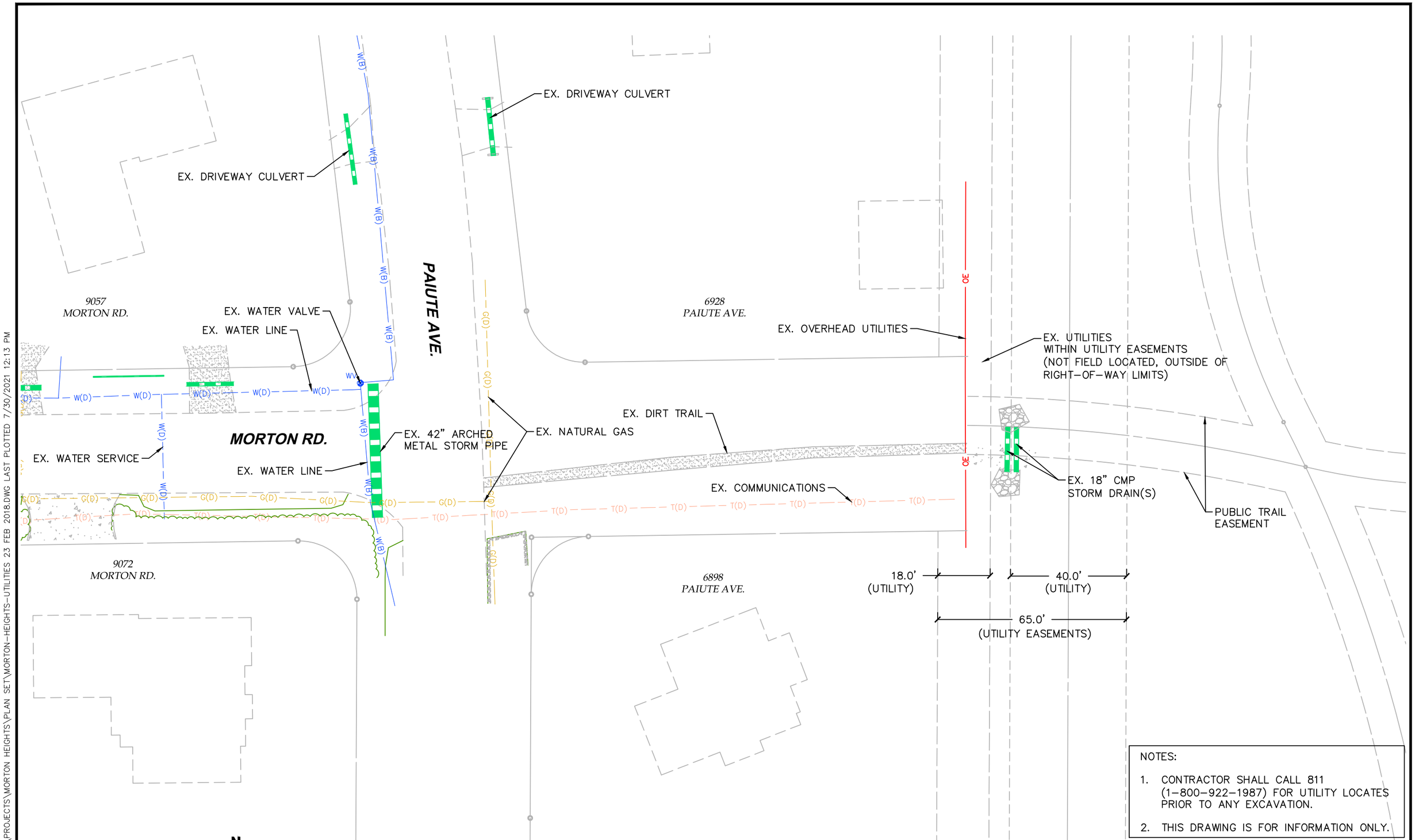

NOTES:

1. CONTRACTOR SHALL CALL 811 (1-800-922-1987) FOR UTILITY LOCATES PRIOR TO ANY EXCAVATION.
2. THIS DRAWING IS FOR INFORMATION ONLY.

FOR CONSTRUCTION

CALL UTILITY NOTIFICATION CENTER OF COLORADO

811

CALL 2-BUSINESS DAYS IN ADVANCE BEFORE YOU DIG, GRADE, OR EXCAVATE FOR THE MARKING OF UNDERGROUND MEMBER UTILITIES

REVISIONS:	NO.	DATE	REVISION DESCRIPTION:

BOULDER COUNTY PUBLIC WORKS
ENGINEERING DIVISION

DESIGNED:	CAD/C3D:	CHECKED:	DATE:
RL	RL	DW	07/30/2021

MORTON HEIGHTS-2021

EXISTING UTILITIES (4)

PROJECT NO: **RS-MOR-001** SHEET NO: **21**

C:\AUTOCAD\PROJECTS\MORTON HEIGHTS\PLAN SET\MORTON-HEIGHTS-UTILITIES 23 FEB 2018.DWG LAST PLOTTED 7/30/2021 12:13 PM

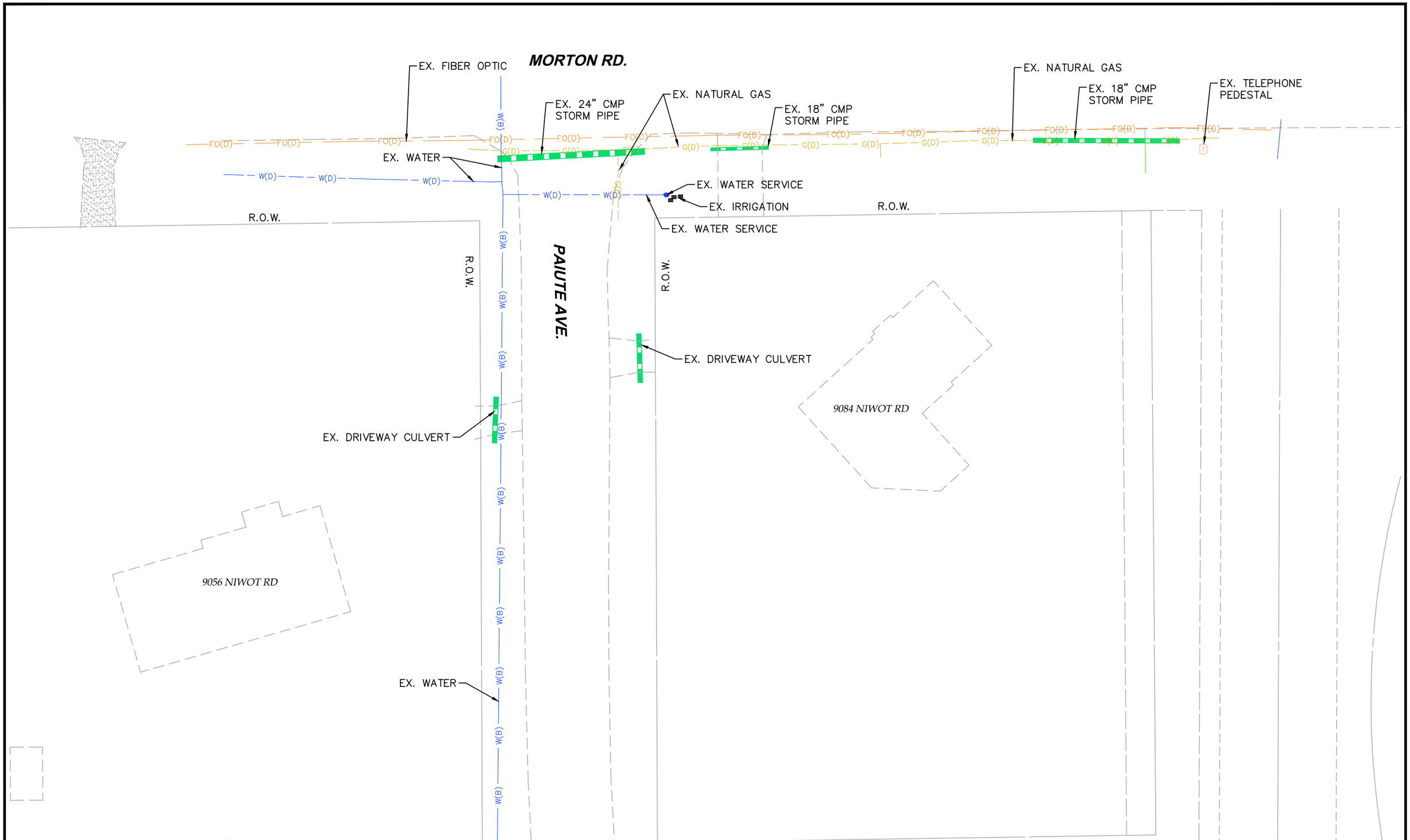

0 30 60

HORIZONTAL SCALE: 1"=30'

N

FOR CONSTRUCTION

CALL UTILITY NOTIFICATION CENTER OF COLORADO

811

CALL 2-BUSINESS DAYS IN ADVANCE BEFORE YOU DIG, GRADE, OR EXCAVATE FOR THE MARKING OF UNDERGROUND MEMBER UTILITIES

REVISIONS: NO.	DATE	REVISION DESCRIPTION:

BOULDER COUNTY PUBLIC WORKS
ENGINEERING DIVISION

DESIGNED:	CAD/C3D:	CHECKED:	DATE:
RL	RL	DW	07/30/2021

MORTON HEIGHTS-2021

EXISTING UTILITIES (5)

PROJECT NO: **RS-MOR-001** SHEET NO: **22**

C:\AUTOCAD\PROJECTS\MORTON HEIGHTS\PLAN SET\MORTON-HEIGHTS-UTILITIES 23 FEB 2018.DWG LAST PLOTTED 7/30/2021 12:13 PM

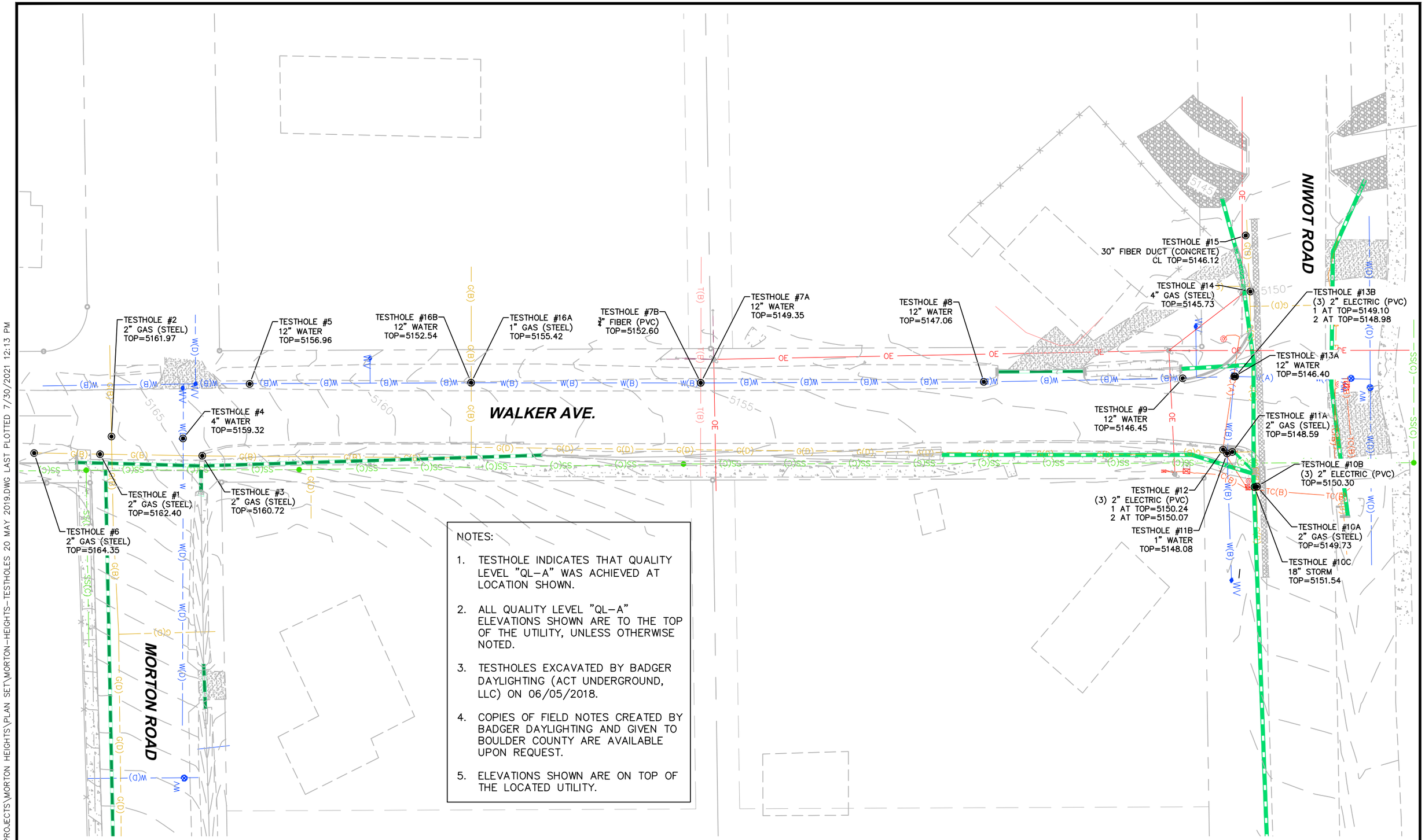

NOTES:

1. TESTHOLE INDICATES THAT QUALITY LEVEL "QL-A" WAS ACHIEVED AT LOCATION SHOWN.
2. ALL QUALITY LEVEL "QL-A" ELEVATIONS SHOWN ARE TO THE TOP OF THE UTILITY, UNLESS OTHERWISE NOTED.
3. TESTHOLES EXCAVATED BY BADGER DAYLIGHTING (ACT UNDERGROUND, LLC) ON 06/05/2018.
4. COPIES OF FIELD NOTES CREATED BY BADGER DAYLIGHTING AND GIVEN TO BOULDER COUNTY ARE AVAILABLE UPON REQUEST.
5. ELEVATIONS SHOWN ARE ON TOP OF THE LOCATED UTILITY.

0 40 80

HORIZONTAL SCALE: 1"=40'

N

FOR CONSTRUCTION

CALL UTILITY NOTIFICATION CENTER OF COLORADO

811

CALL 2-BUSINESS DAYS IN ADVANCE BEFORE YOU DIG, GRADE, OR EXCAVATE FOR THE MARKING OF UNDERGROUND MEMBER UTILITIES

REVISIONS:	NO.	DATE	REVISION DESCRIPTION:

BOULDER COUNTY PUBLIC WORKS
ENGINEERING DIVISION

DESIGNED:	CAD/C3D:	CHECKED:	DATE:
RL	RL	DW	07/30/2021

MORTON HEIGHTS-2021

UTILITY TESTHOLES

PROJECT NO: **RS-MOR-001** SHEET NO: **23**

C:\AUTOCAD\PROJECTS\MORTON HEIGHTS\PLAN SET\MORTON-HEIGHTS-TESTHOLES 20 MAY 2019.DWG LAST PLOTTED 7/30/2021 12:13 PM

LEGEND:

EXISTING CONCRETE TO BE REMOVED (TOTAL THIS SHEET=114 S.Y.)

AREA TO BE CLEARED & GRUBBED PRIOR TO GRADING (TOTAL THIS SHEET=1,724 S.F.)

EXISTING CONCRETE CURB AND GUTTER REMOVAL (TOTAL THIS SHEET=85 L.F.)

NOTES:

1. EXISTING CMP STORM DRAIN PIPE IS TO REMAIN ACTIVE DURING CONSTRUCTION.
2. ALL STORM PIPE PATCHING SHALL BE WATER TIGHT TO PREVENT EROSION UNDERNEATH OF ASPHALT ROAD SURFACE.

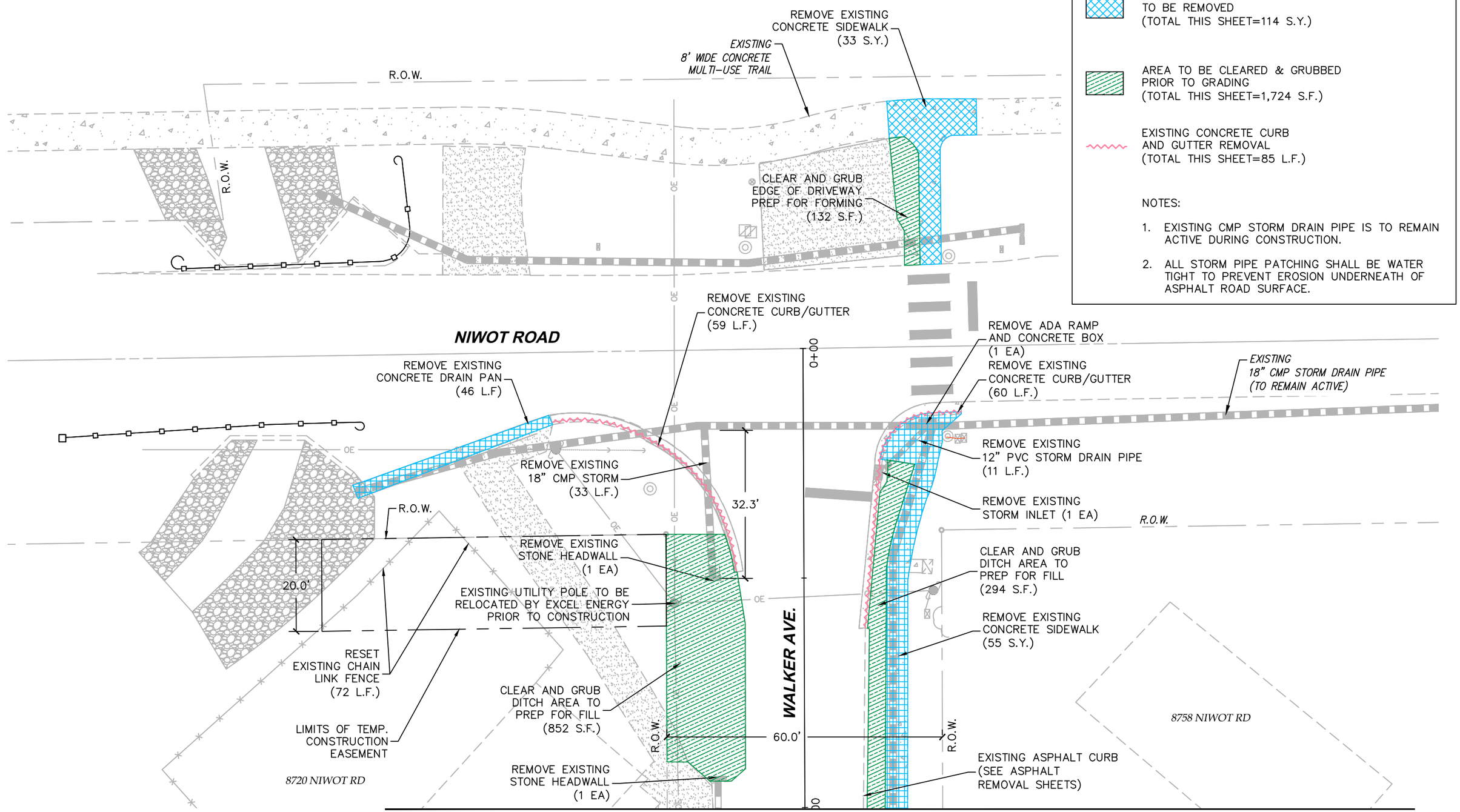

0 20 40

HORIZONTAL SCALE: 1"=20'

N

FOR CONSTRUCTION

CALL UTILITY NOTIFICATION CENTER OF COLORADO

811

CALL 2-BUSINESS DAYS IN ADVANCE BEFORE YOU DIG, GRADE, OR EXCAVATE FOR THE MARKING OF UNDERGROUND MEMBER UTILITIES

REVISIONS:	NO.	DATE	REVISION DESCRIPTION:

BOULDER COUNTY PUBLIC WORKS
ENGINEERING DIVISION

DESIGNED:	CAD/C3D:	CHECKED:	DATE:
RL	RL	DW	07/30/2021

MORTON HEIGHTS-2021

REMOVALS (1)

PROJECT NO: **RS-MOR-001** SHEET NO: **24**

C:\AUTOCAD\PROJECTS\MORTON HEIGHTS\PLAN SET\MORTON-HEIGHTS-REMOVALS 08 JAN 2020.DWG LAST PLOTTED 7/30/2021 12:14 PM

LEGEND:

EXISTING CONCRETE TO BE REMOVED
(TOTAL THIS SHEET=170 SQ. YD.)

AREA TO BE CLEARED & GRUBBED
PRIOR TO GRADING
(TOTAL THIS SHEET=8,086 S.F.)

NOTES:

1. THE GROUND SURFACE UNDERLYING ALL FILLS SHALL BE CAREFULLY PREPARED BY REMOVING ALL ORGANIC MATTER, SCARIFICATION TO A DEPTH OF EIGHT (8) INCHES AND RECOMPACTING TO NINETY–FIVE PERCENT (95%) OF THE MAXIMUM STANDARD PROCTOR DENSITY (ASTM D698) AT OPTIMUM MOISTURE CONTENT + OR – TWO PERCENT (2%) PRIOR TO FILL PLACEMENT.

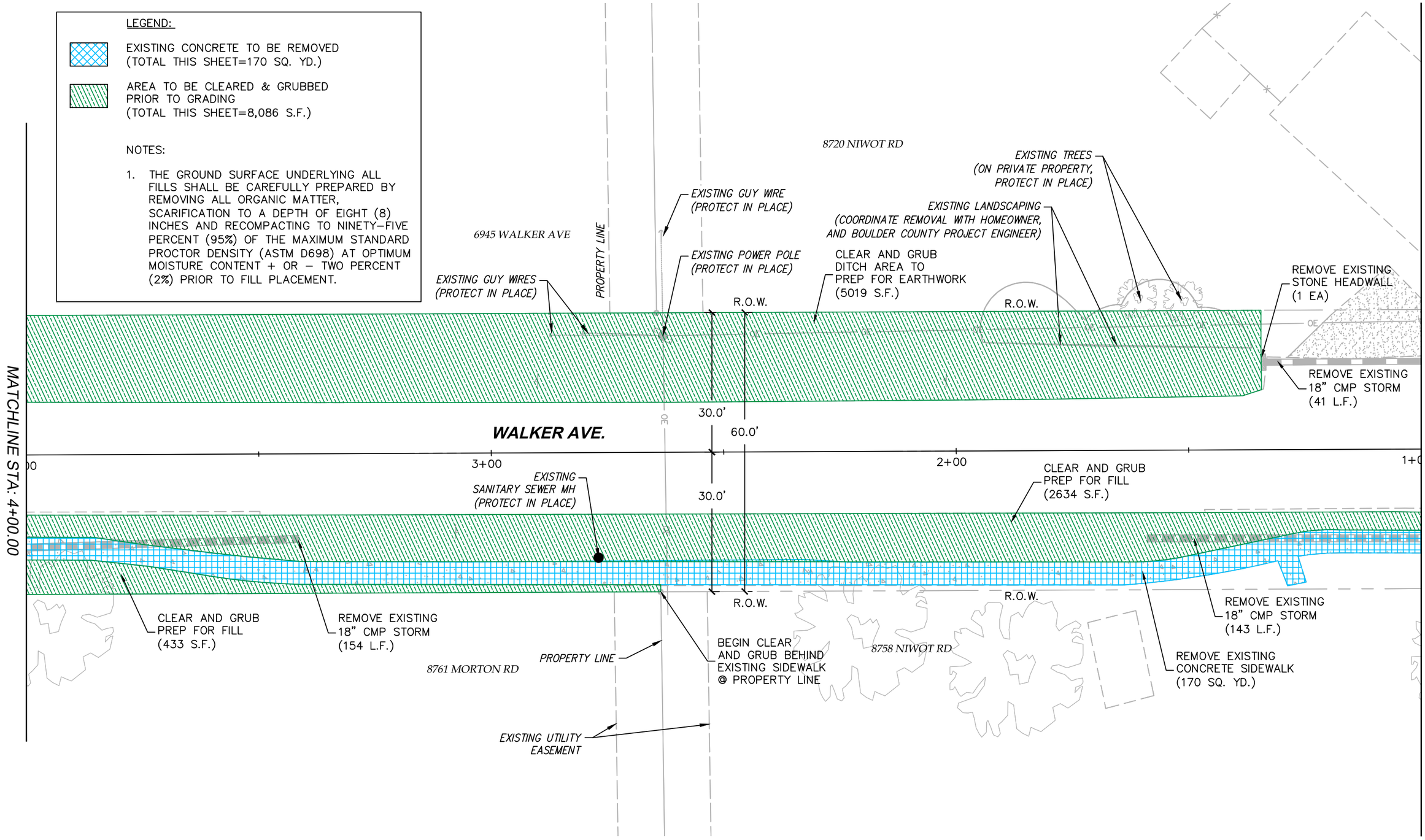

0 20 40
HORIZONTAL SCALE: 1"=20'

N

FOR CONSTRUCTION

CALL UTILITY NOTIFICATION CENTER OF COLORADO
811
CALL 2–BUSINESS DAYS IN ADVANCE BEFORE YOU DIG, GRADE, OR EXCAVATE FOR THE MARKING OF UNDERGROUND MEMBER UTILITIES

REVISIONS: NO.	DATE	REVISION DESCRIPTION:

BOULDER COUNTY PUBLIC WORKS
ENGINEERING DIVISION

DESIGNED:	CAD/C3D:	CHECKED:	DATE:
RL	RL	DW	07/30/2021

MORTON HEIGHTS–2021
REMOVALS (2)
PROJECT NO: **RS-MOR-001** SHEET NO: **25**

C:\AUTOCAD\PROJECTS\MORTON HEIGHTS\PLAN SET\MORTON–HEIGHTS–REMOVALS 08 JAN 2020.DWG LAST PLOTTED 7/30/2021 12:14 PM

MATCHLINE STA: 4+00.00 (WALKER AVE)

EXISTING WATER METER (PROTECT IN PLACE)

CLEAR AND GRUB DITCH AREA TO PREP FOR FILL

REMOVE EXISTING CONCRETE SIDEWALK

R.O.W.

60.0'

R.O.W.

EXISTING SANITARY SEWER MH (PROTECT IN PLACE)

6945 WALKER AVE

WALKER AVE.

REMOVE EXISTING 18" CMP STORM (154 L.F.)

8761 MORTON RD

REMOVE EXISTING 18" CMP STORM W/ CMP F.E.S. & TRASH RACK (11 L.F.)

REMOVE EXISTING ROAD SIGN(S) AND RESET (SEE SIGNAGE SHEETS)

CLEAR AND GRUB DITCH AREA (THIS AREA INCLUDED IN QNTYS SHOWN ON WALKER AVE.)

8789 MORTON RD

R.O.W.

CLEAR AND GRUB DITCH AREA PREP FOR EARTHWORK (TOTAL AREA SHOWN ON PRIOR SHEET)

5+00

REMOVE EXISTING STORM INLET (1 EA)

REMOVE ALL OF EXISTING DELINEATORS IN THIS AREA – 30 TOTAL

REMOVE EXISTING 18" CMP STORM (42 L.F.)

60.0'

2+00

1+00

PI: 5+18.03

0+00

EXISTING CROSSING STRIPES WILL BE REMOVED WITH ASPHALT RECLAMATION

REMOVE EXISTING 18" CMP STORM (56 L.F.)

MORTON RD.

REMOVE EXISTING CONCRETE (70 S.Y.)

END CMP PIPE REMOVAL STA: 0+79.73 RIGHT 22.82'

REMOVE EXISTING STORM INLET (1 EA)

56.0'

R.O.W.

MATCHLINE STA: 2+50 (MORTON RD.)

STA: 0+76.22 RIGHT 28.70'

EXISTING SANITARY SEWER MH (PROTECT IN PLACE)

REMOVE EXISTING CONCRETE HEADWALL (1 EA)

REMOVE EXISTING CONCRETE SIDEWALK (42 S.Y.)

REMOVE EXISTING 18" CMP STORM (13 L.F.)

CLEAR AND GRUB DITCH AREA (311 S.F.)

R.O.W.

60.0'

R.O.W.

LEGEND:

EXISTING CONCRETE TO BE REMOVED (TOTAL THIS SHEET=139 SQ. YD.)

AREA TO BE CLEARED & GRUBBED PRIOR TO GRADING (TOTAL THIS SHEET=12,470 S.F.)

0 20 40

HORIZONTAL SCALE: 1"=20'

N

FOR CONSTRUCTION

CALL UTILITY NOTIFICATION CENTER OF COLORADO

811

CALL 2-BUSINESS DAYS IN ADVANCE BEFORE YOU DIG, GRADE, OR EXCAVATE FOR THE MARKING OF UNDERGROUND MEMBER UTILITIES

REVISIONS: NO.	DATE	REVISION DESCRIPTION:

BOULDER COUNTY PUBLIC WORKS
ENGINEERING DIVISION

DESIGNED:	CAD/C3D:	CHECKED:	DATE:
RL	RL	DW	07/30/2021

MORTON HEIGHTS–2021

REMOVALS (3)

PROJECT NO: RS-MOR-001 SHEET NO: 26

C:\AUTOCAD\PROJECTS\MORTON HEIGHTS\PLAN SET\MORTON-HEIGHTS-REMOVALS 08 JAN 2020.DWG LAST PLOTTED 7/30/2021 12:14 PM

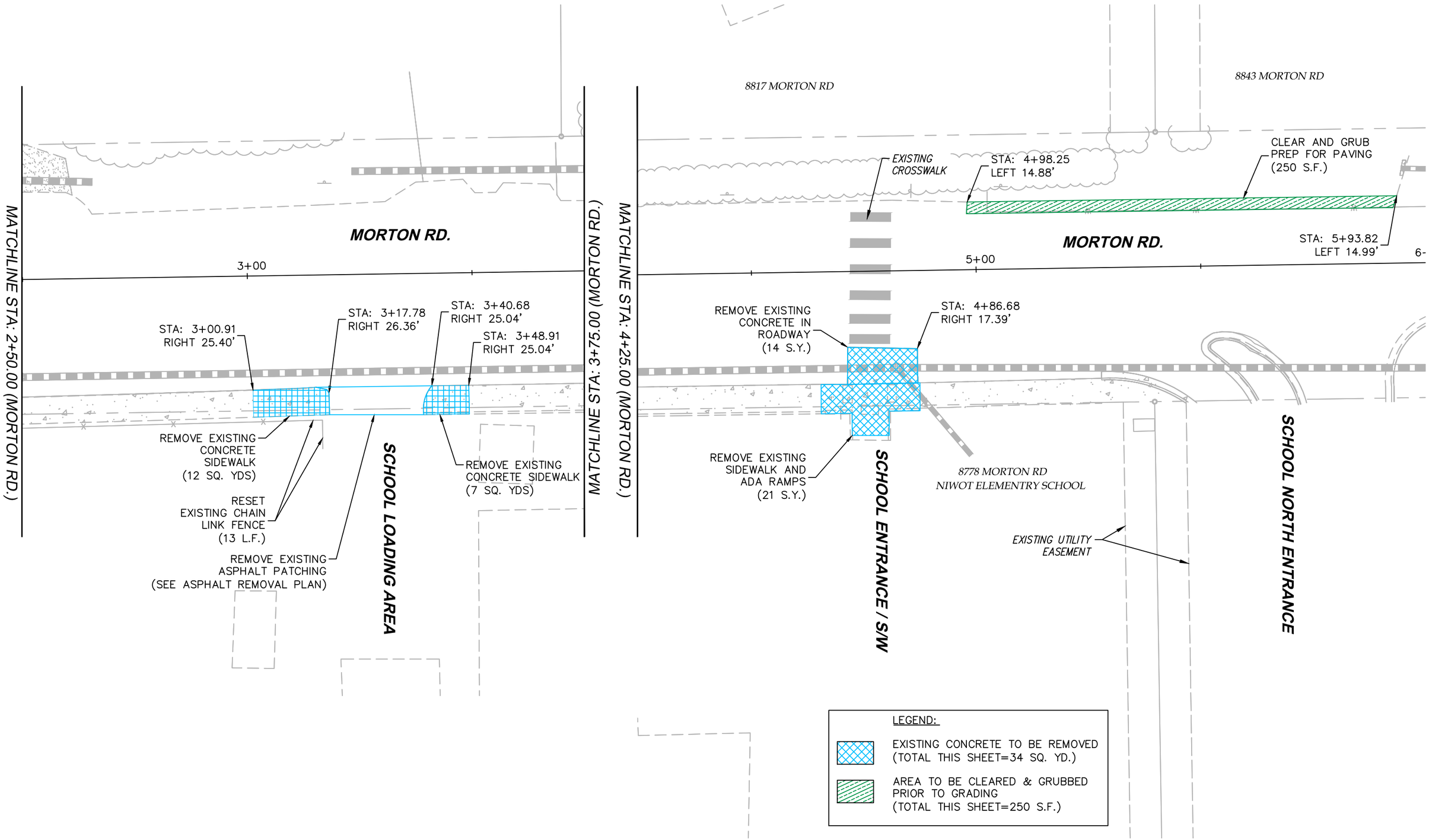

0 20 40
HORIZONTAL SCALE: 1"=20'

N

FOR CONSTRUCTION

CALL UTILITY NOTIFICATION CENTER OF COLORADO
811
CALL 2-BUSINESS DAYS IN ADVANCE BEFORE YOU DIG, GRADE, OR EXCAVATE FOR THE MARKING OF UNDERGROUND MEMBER UTILITIES

REVISIONS: NO.	DATE	REVISION DESCRIPTION:

BOULDER COUNTY PUBLIC WORKS
ENGINEERING DIVISION

DESIGNED:	CAD/C3D:	CHECKED:	DATE:
RL	RL	DW	07/30/2021

MORTON HEIGHTS-2021

REMOVALS (4)

PROJECT NO: **RS-MOR-001** SHEET NO: **27**

C:\AUTOCAD\PROJECTS\MORTON HEIGHTS\PLAN SET\MORTON-HEIGHTS-REMOVALS 08 JAN 2020.DWG LAST PLOTTED 7/30/2021 12:14 PM

LEGEND:

EXISTING CONCRETE TO BE REMOVED (TOTAL THIS SHEET=52 S.Y.)

AREA TO BE CLEARED & GRUBBED PRIOR TO GRADING (TOTAL THIS SHEET=4,301 S.F.)

EXISTING CONCRETE CURB AND GUTTER REMOVAL (TOTAL THIS SHEET=85 L.F.)

8778 MORTON RD
NIWOT ELEMENTRY SCHOOL

SCHOOL ENTRANCE

TEMPORARY ACCESS 5' BEYOND R.O.W. LINE

PROTECT EXISTING CHAIN LINK FENCE

EXISTING CONCRETE SIDEWALK

EXISTING CRUSHER FINES PATH (REMOVE)

CLEAR AND GRUB AREA TO PREP FOR GRADING (3,942 S.F.)

5.0'

R.O.W.

CLEAR AND GRUB AREA TO PREP FOR GRADING (359 S.F.)

REMOVE EXISTING 18" CMP STORM (60 L.F.)

2+00

3+00

REMOVE EXISTING CONCRETE CURB (45 L.F.)

REMOVE EXISTING CONCRETE CURB (39 L.F.)

REMOVE EXISTING CONCRETE SIDEWALK (39 S.Y.)

EXISTING EDGE OF ASPHALT

PT: 1+67.15

EXISTING CROSSING STRIPES WILL BE REMOVED WITH ASPHALT OVERLAY

EXISTING CROSSWALK

TEMPORARY ACCESS 5' BEYOND R.O.W. LINE

1+00

60'

PC: 0+57.10

MARATHON RD.

R.O.W.

R.O.W.

8820 MARATHON RD

CENTERLINE OF PLATTED R.O.W. (NOTE: EXISTING ROADWAY IS NOT CENTERED IN R.O.W.)

REMOVE EXISTING 18" CMP STORM (20 L.F.)

EXISTING CROSSING STRIPES WILL BE REMOVED WITH ASPHALT OVERLAY

EXISTING 18" CMP (TO REMAIN IN PLACE)

EXISTING NYLOPLAST DRAIN BASIN (TO REMAIN IN PLACE)

REMOVE EXISTING CONCRETE SIDEWALK (13 S.Y.)

PI: 13+91.33

14+00

0+00

WALKER DR.

0 20 40

HORIZONTAL SCALE: 1"=20'

N

FOR CONSTRUCTION

CALL UTILITY NOTIFICATION CENTER OF COLORADO

811

CALL 2-BUSINESS DAYS IN ADVANCE BEFORE YOU DIG, GRADE, OR EXCAVATE FOR THE MARKING OF UNDERGROUND MEMBER UTILITIES

REVISIONS: NO.	DATE	REVISION DESCRIPTION:

BOULDER COUNTY PUBLIC WORKS
ENGINEERING DIVISION

DESIGNED:	CAD/C3D:	CHECKED:	DATE:
RL	RL	DW	07/30/2021

MORTON HEIGHTS-2021

REMOVALS (5)

PROJECT NO: RS-MOR-001 SHEET NO: 28

C:\AUTOCAD\PROJECTS\MORTON HEIGHTS\PLAN SET\MORTON-HEIGHTS-REMOVALS 08 JAN 2020.DWG LAST PLOTTED 7/30/2021 12:14 PM

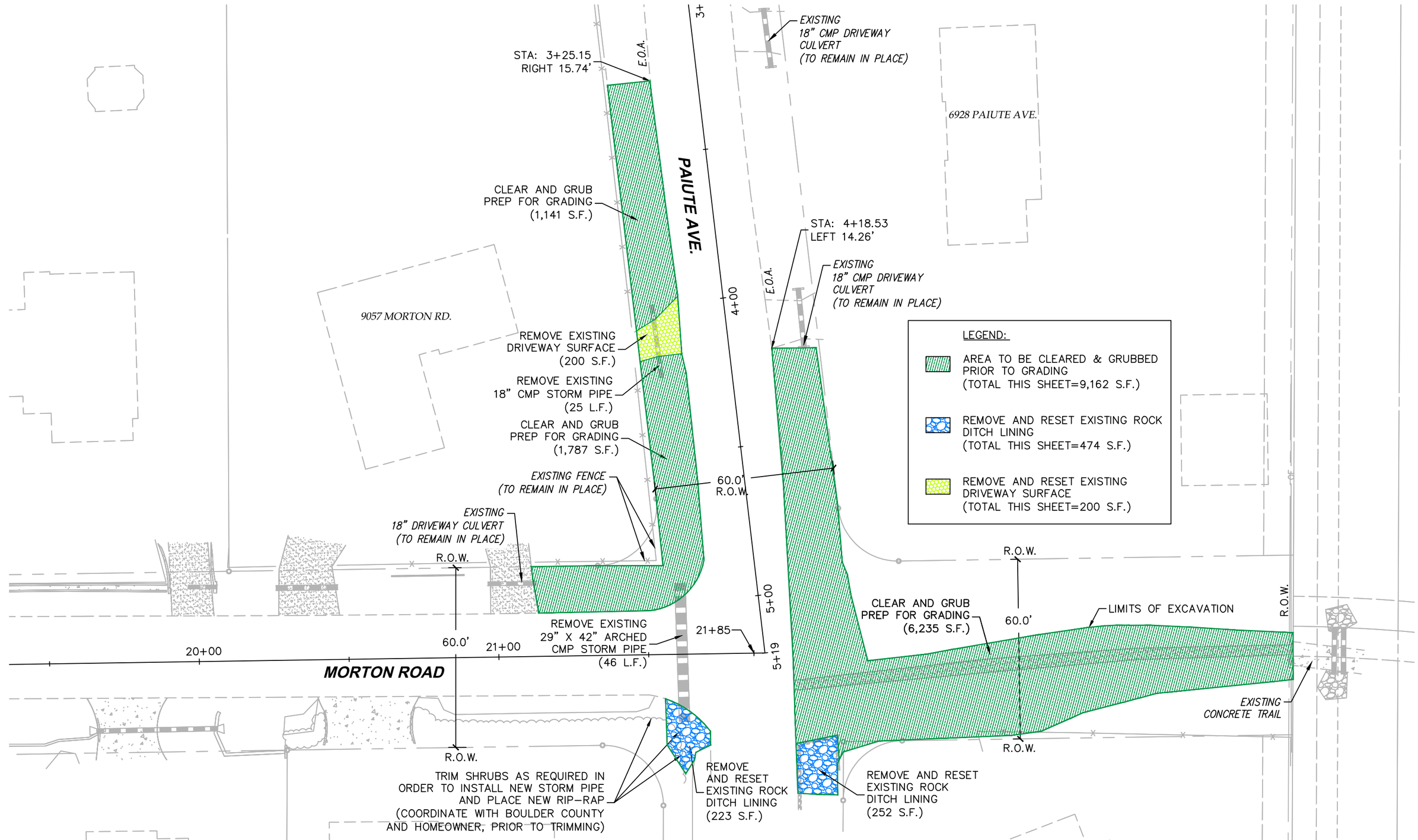

C:\AUTOCAD\PROJECTS\MORTON HEIGHTS\PLAN SET\MORTON-HEIGHTS-REMOVALS 08 JAN 2020.DWG LAST PLOTTED 7/30/2021 12:14 PM

FOR CONSTRUCTION

CALL UTILITY NOTIFICATION CENTER OF COLORADO
811
CALL 2-BUSINESS DAYS IN ADVANCE BEFORE YOU DIG, GRADE, OR EXCAVATE FOR THE MARKING OF UNDERGROUND MEMBER UTILITIES

REVISIONS: NO.	DATE	REVISION DESCRIPTION:

BOULDER COUNTY PUBLIC WORKS
ENGINEERING DIVISION

DESIGNED:	CAD/C3D:	CHECKED:	DATE:
RL	RL	DW	07/30/2021

MORTON HEIGHTS-2021

REMOVALS (6)

PROJECT NO: **RS-MOR-001** SHEET NO: **29**

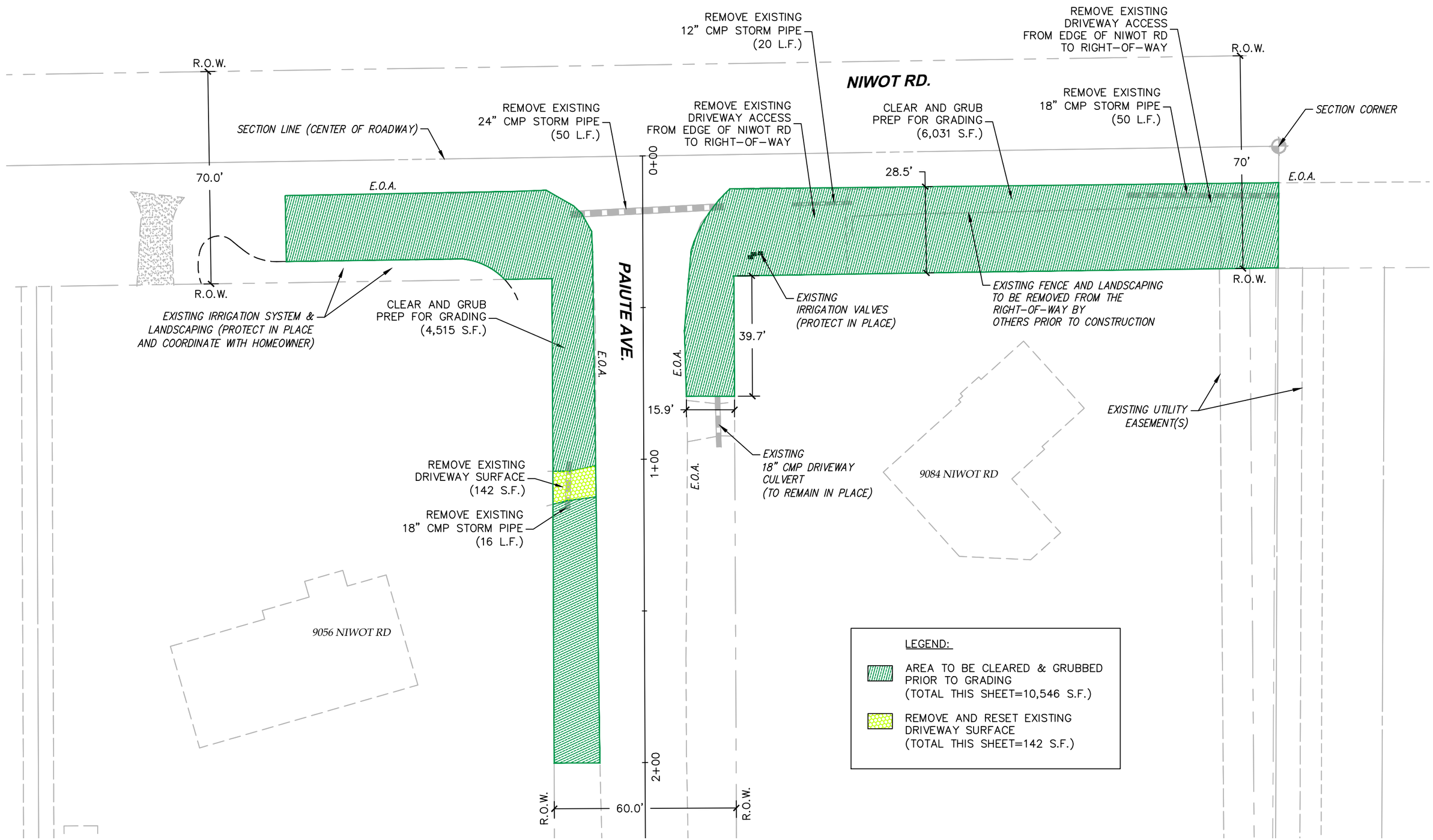

0 30 60
HORIZONTAL SCALE: 1"=30'

N

FOR CONSTRUCTION

CALL UTILITY NOTIFICATION CENTER OF COLORADO
811
CALL 2-BUSINESS DAYS IN ADVANCE BEFORE YOU DIG, GRADE, OR EXCAVATE FOR THE MARKING OF UNDERGROUND MEMBER UTILITIES

REVISIONS: NO.	DATE	REVISION DESCRIPTION:

BOULDER COUNTY PUBLIC WORKS
ENGINEERING DIVISION

DESIGNED:	CAD/C3D:	CHECKED:	DATE:
RL	RL	DW	07/30/2021

MORTON HEIGHTS-2021
REMOVALS (7)
PROJECT NO: **RS-MOR-001** SHEET NO: **30**

C:\AUTOCAD\PROJECTS\MORTON HEIGHTS\PLAN SET\MORTON-HEIGHTS-REMOVALS 08 JAN 2020.DWG LAST PLOTTED 7/30/2021 12:14 PM

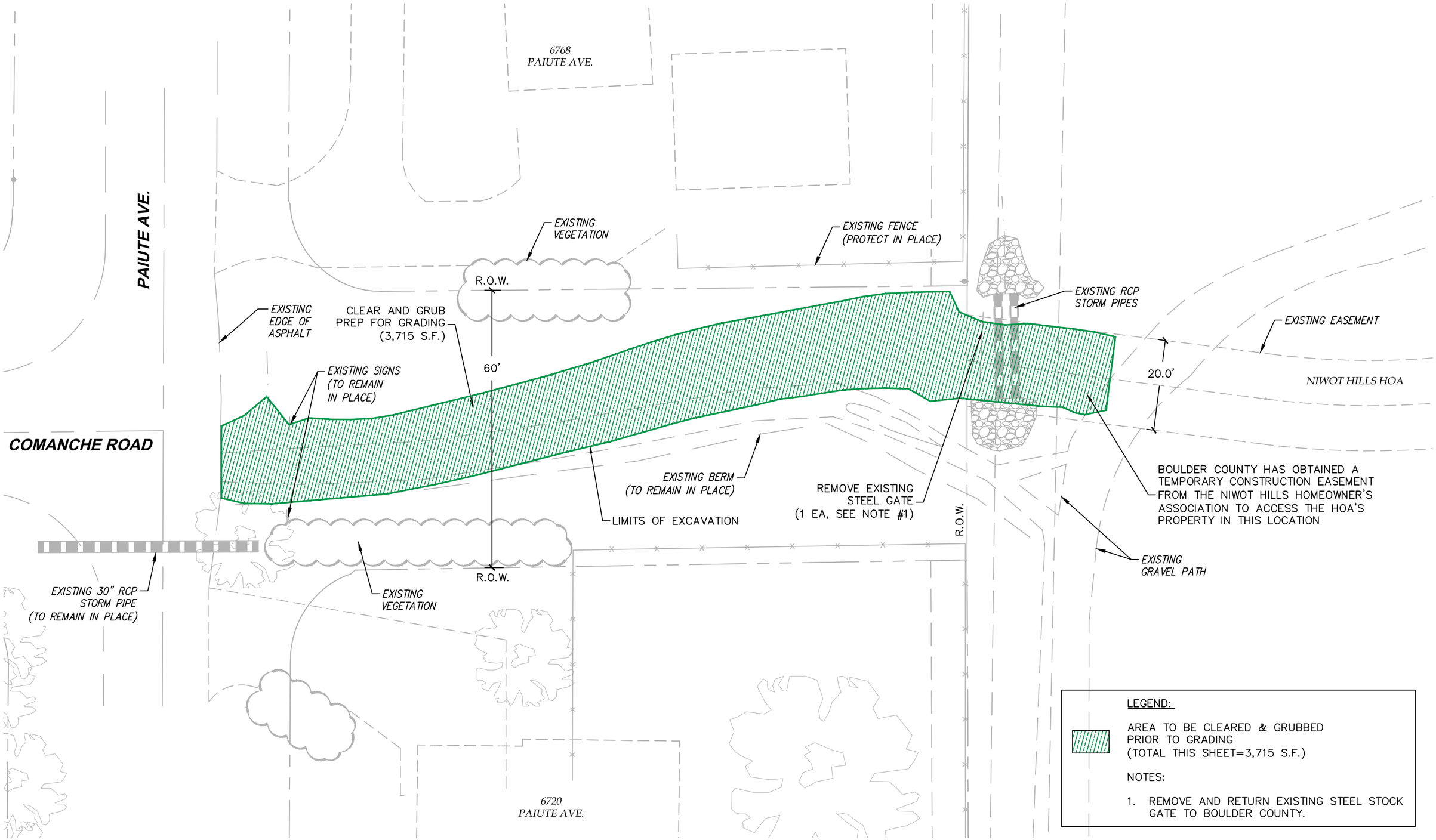

0 20 40
HORIZONTAL SCALE: 1"=20'

N

FOR CONSTRUCTION

CALL UTILITY NOTIFICATION CENTER OF COLORADO
811
CALL 2-BUSINESS DAYS IN ADVANCE BEFORE YOU DIG, GRADE, OR EXCAVATE FOR THE MARKING OF UNDERGROUND MEMBER UTILITIES

REVISIONS: NO.	DATE	REVISION DESCRIPTION:

BOULDER COUNTY PUBLIC WORKS
ENGINEERING DIVISION

DESIGNED:	CAD/C3D:	CHECKED:	DATE:
RL	RL	DW	07/30/2021

MORTON HEIGHTS-2021
REMOVALS (8)
PROJECT NO: **RS-MOR-001** SHEET NO: **31**

C:\AUTOCAD\PROJECTS\MORTON HEIGHTS\PLAN SET\MORTON-HEIGHTS-REMOVALS 08 JAN 2020.DWG LAST PLOTTED 7/30/2021 12:14 PM

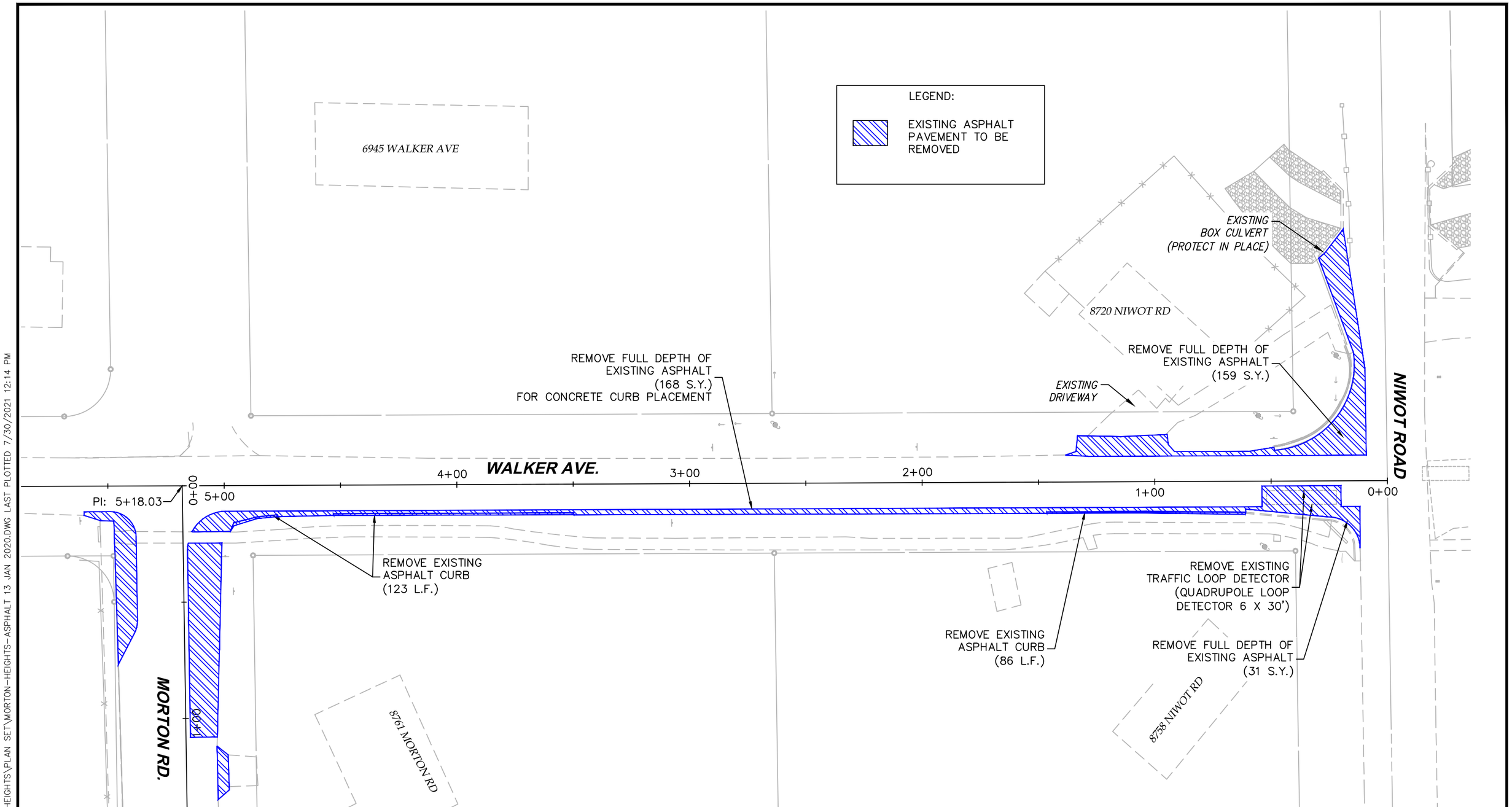

0 40 80

HORIZONTAL SCALE: 1"=40'

N

FOR CONSTRUCTION

CALL UTILITY NOTIFICATION CENTER OF COLORADO

811

CALL 2-BUSINESS DAYS IN ADVANCE BEFORE YOU DIG, GRADE, OR EXCAVATE FOR THE MARKING OF UNDERGROUND MEMBER UTILITIES

REVISIONS:	NO.	DATE	REVISION DESCRIPTION:

BOULDER COUNTY PUBLIC WORKS
ENGINEERING DIVISION

DESIGNED:	CAD/C3D:	CHECKED:	DATE:
RL	RL	DW	07/30/2021

MORTON HEIGHTS–2021

ASPHALT REMOVAL (1)

PROJECT NO: **RS-MOR-001** SHEET NO: **32**

C:\AUTOCAD\PROJECTS\MORTON HEIGHTS\PLAN SET\MORTON-HEIGHTS-ASPHALT 13 JAN 2020.DWG LAST PLOTTED 7/30/2021 12:14 PM

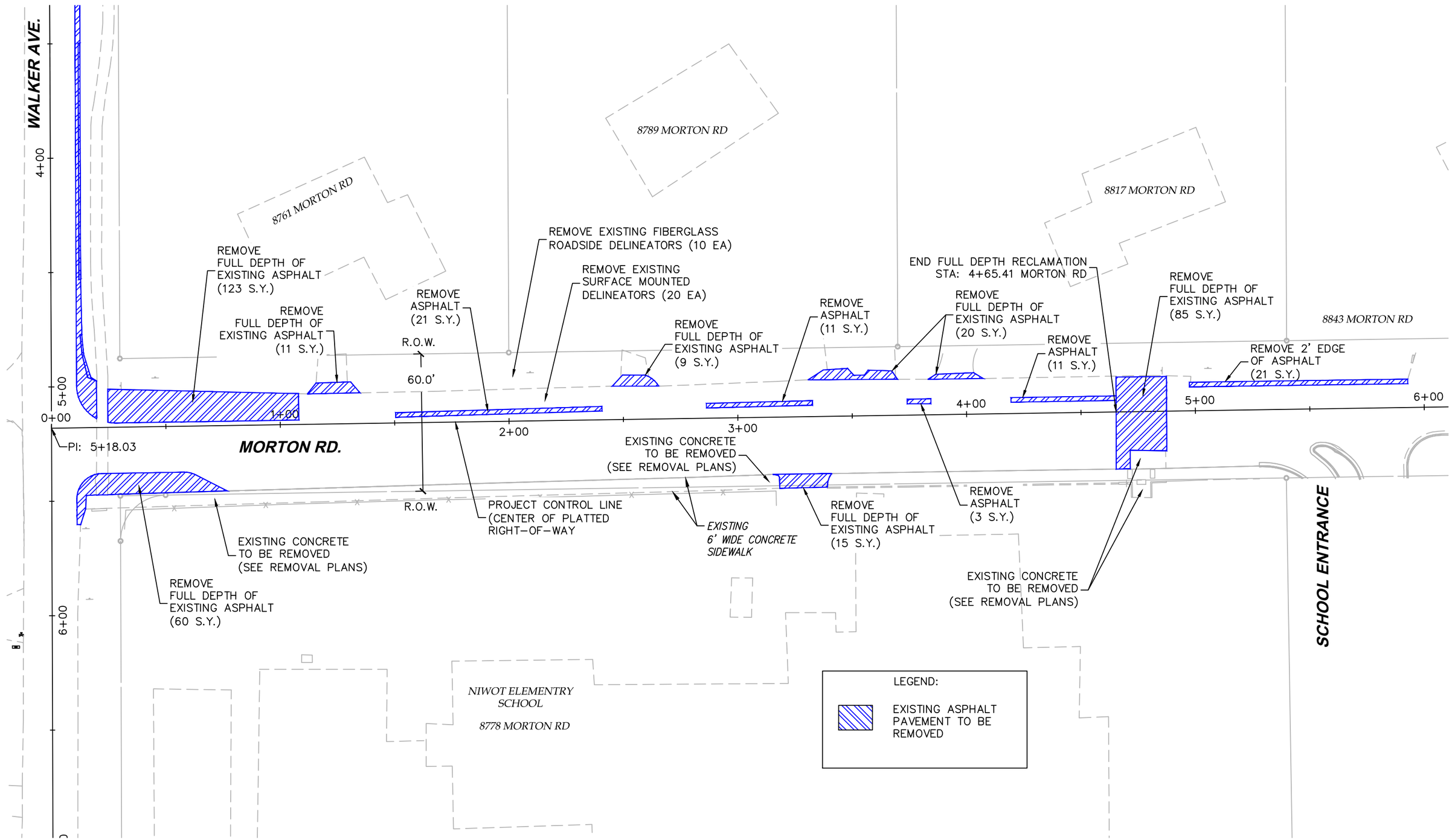

0 40 80

HORIZONTAL SCALE: 1"=40'

N

FOR CONSTRUCTION

CALL UTILITY NOTIFICATION CENTER OF COLORADO

811

CALL 2-BUSINESS DAYS IN ADVANCE BEFORE YOU DIG, GRADE, OR EXCAVATE FOR THE MARKING OF UNDERGROUND MEMBER UTILITIES

REVISIONS:	NO.	DATE	REVISION DESCRIPTION:

Boulder County

BOULDER COUNTY PUBLIC WORKS
ENGINEERING DIVISION

DESIGNED:	CAD/C3D:	CHECKED:	DATE:
RL	RL	DW	07/30/2021

MORTON HEIGHTS-2021

ASPHALT REMOVAL (2)

PROJECT NO: **RS-MOR-001** SHEET NO: **33**

C:\AUTOCAD\PROJECTS\MORTON HEIGHTS\PLAN SET\MORTON-HEIGHTS-ASPHALT 13 JAN 2020.DWG LAST PLOTTED 7/30/2021 12:14 PM

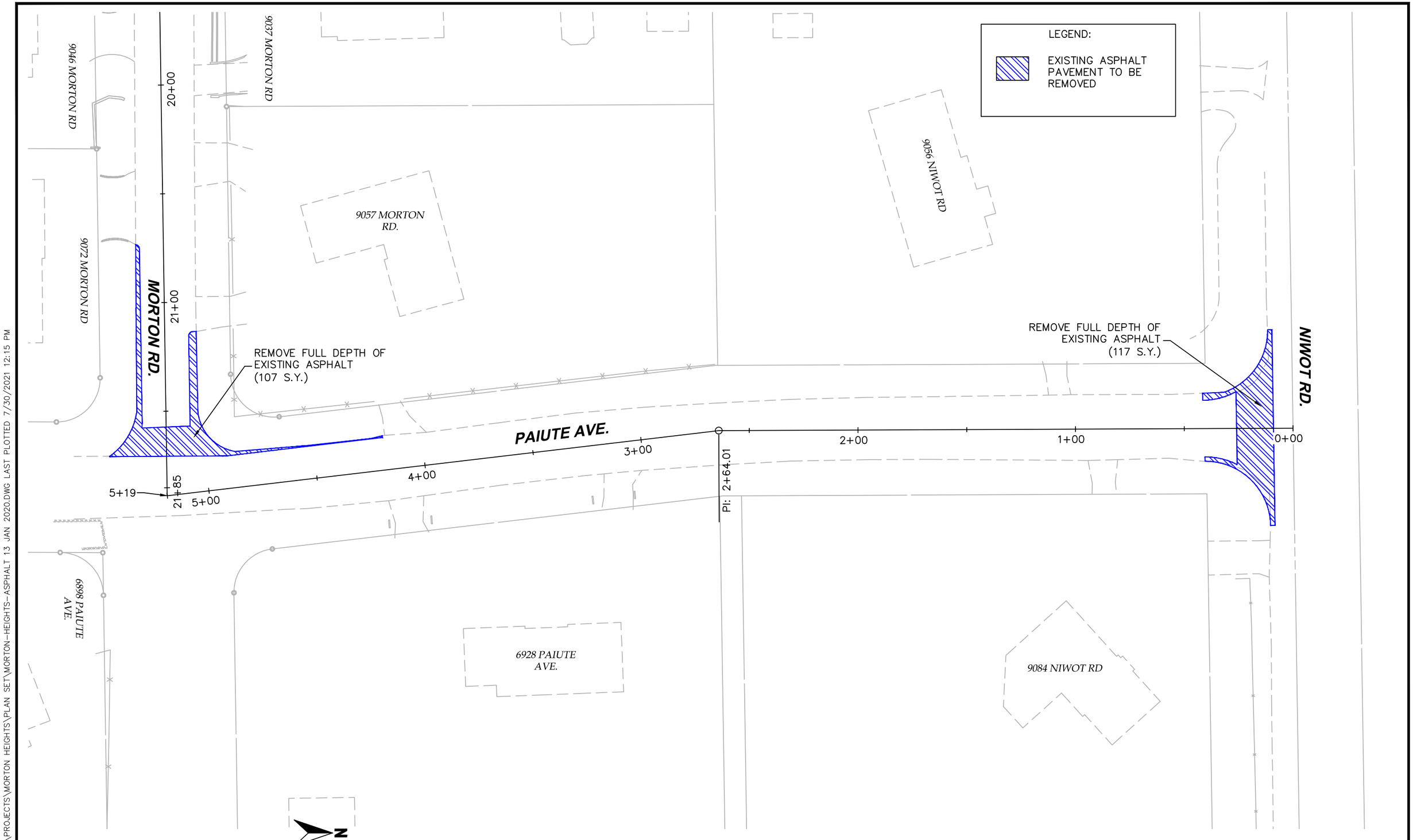

FOR CONSTRUCTION

CALL UTILITY NOTIFICATION CENTER OF COLORADO
811
CALL 2-BUSINESS DAYS IN ADVANCE BEFORE YOU DIG, GRADE, OR EXCAVATE FOR THE MARKING OF UNDERGROUND MEMBER UTILITIES

REVISIONS: NO.	DATE	REVISION DESCRIPTION:

Boulder County

BOULDER COUNTY PUBLIC WORKS
ENGINEERING DIVISION

DESIGNED:	CAD/C3D:	CHECKED:	DATE:
RL	RL	DW	07/30/2021

MORTON HEIGHTS–2021

ASPHALT REMOVAL (4)

PROJECT NO: **RS-MOR-001** SHEET NO: **34**

C:\AUTOCAD\PROJECTS\MORTON HEIGHTS\PLAN SET\MORTON-HEIGHTS-ASPHALT 13 JAN 2020.DWG LAST PLOTTED 7/30/2021 12:15 PM

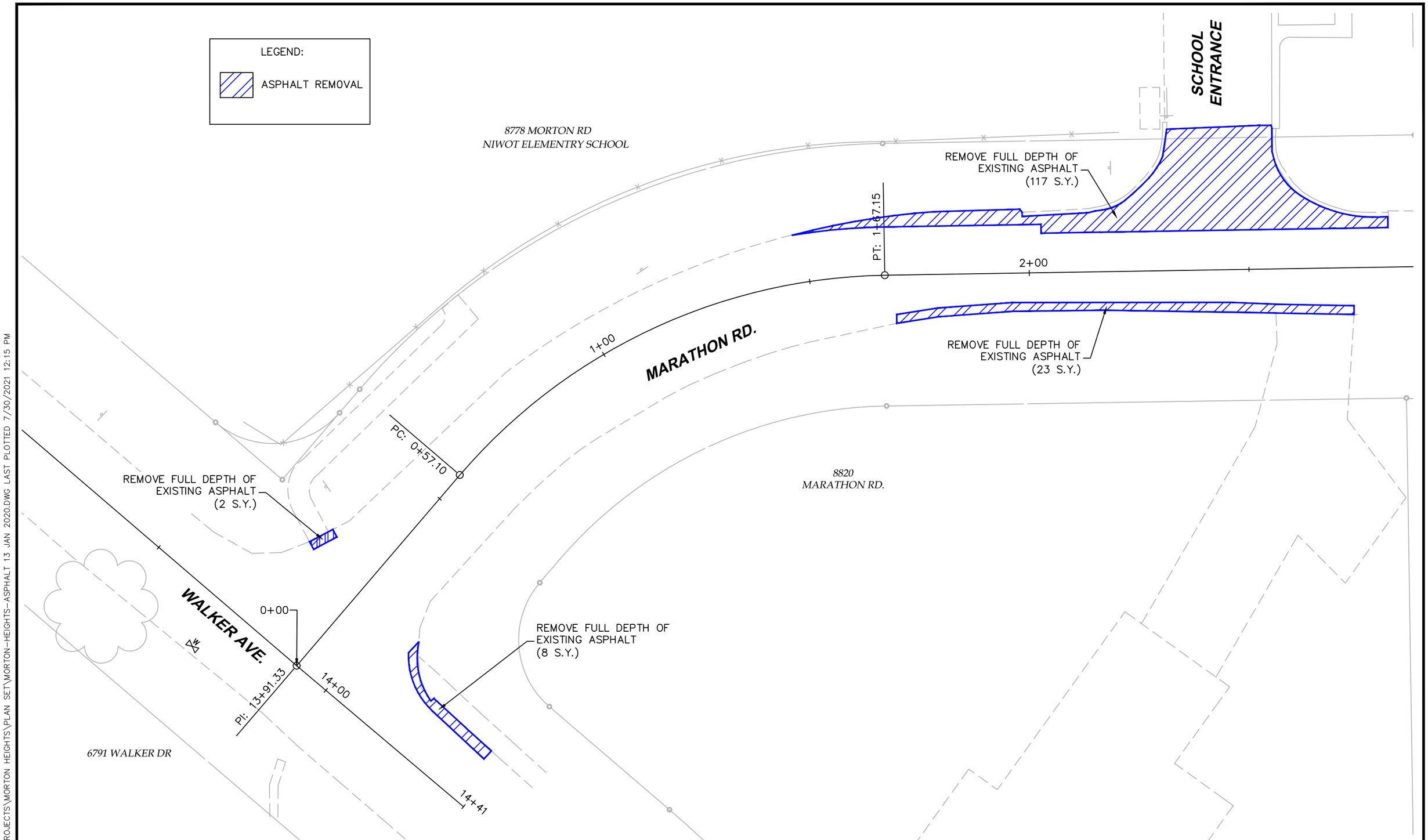

0 20 40

HORIZONTAL SCALE: 1"=20'

N

FOR CONSTRUCTION

CALL UTILITY NOTIFICATION CENTER OF COLORADO

811

CALL 2-BUSINESS DAYS IN ADVANCE BEFORE YOU DIG, GRADE, OR EXCAVATE FOR THE MARKING OF UNDERGROUND MEMBER UTILITIES

REVISIONS: NO.	DATE	REVISION DESCRIPTION:

BOULDER COUNTY PUBLIC WORKS
ENGINEERING DIVISION

DESIGNED:	CAD/C3D:	CHECKED:	DATE:
RL	RL	DW	07/30/2021

MORTON HEIGHTS-2021

ASPHALT REMOVAL (3)

PROJECT NO: **RS-MOR-001** SHEET NO: **35**

C:\AUTOCAD\PROJECTS\MORTON HEIGHTS\PLAN SET\MORTON-HEIGHTS-ASPHALT 13 JAN 2020.DWG LAST PLOTTED 7/30/2021 12:15 PM

LEGEND:

LIMITS OF PHASE 1 WORK TO BE COMPLETED DURING DITCH OFF-SEASON.

SEE PROJECT SPECIALS FOR MORE INFORMATION.

PHASE 1 WORK INCLUDES:

- EXCAVATE BOTTOM OF EXISTING IRRIGATION CANAL AND INSTALL TYPE L (9") BURIED SOIL RIPRAP (24 CUBIC YD) (SEE DETAIL)
- REMOVAL AND RESET EXISTING GROUTED RIPRAP (153 SQ. FT.)(EXACT DEPTH UNKNOWN)
- INSTALL 48 L.F. (6 LENGTHS @ 8 LF EACH) OF 24" X 38" ELLIPTICAL CONCRETE STORM PIPE

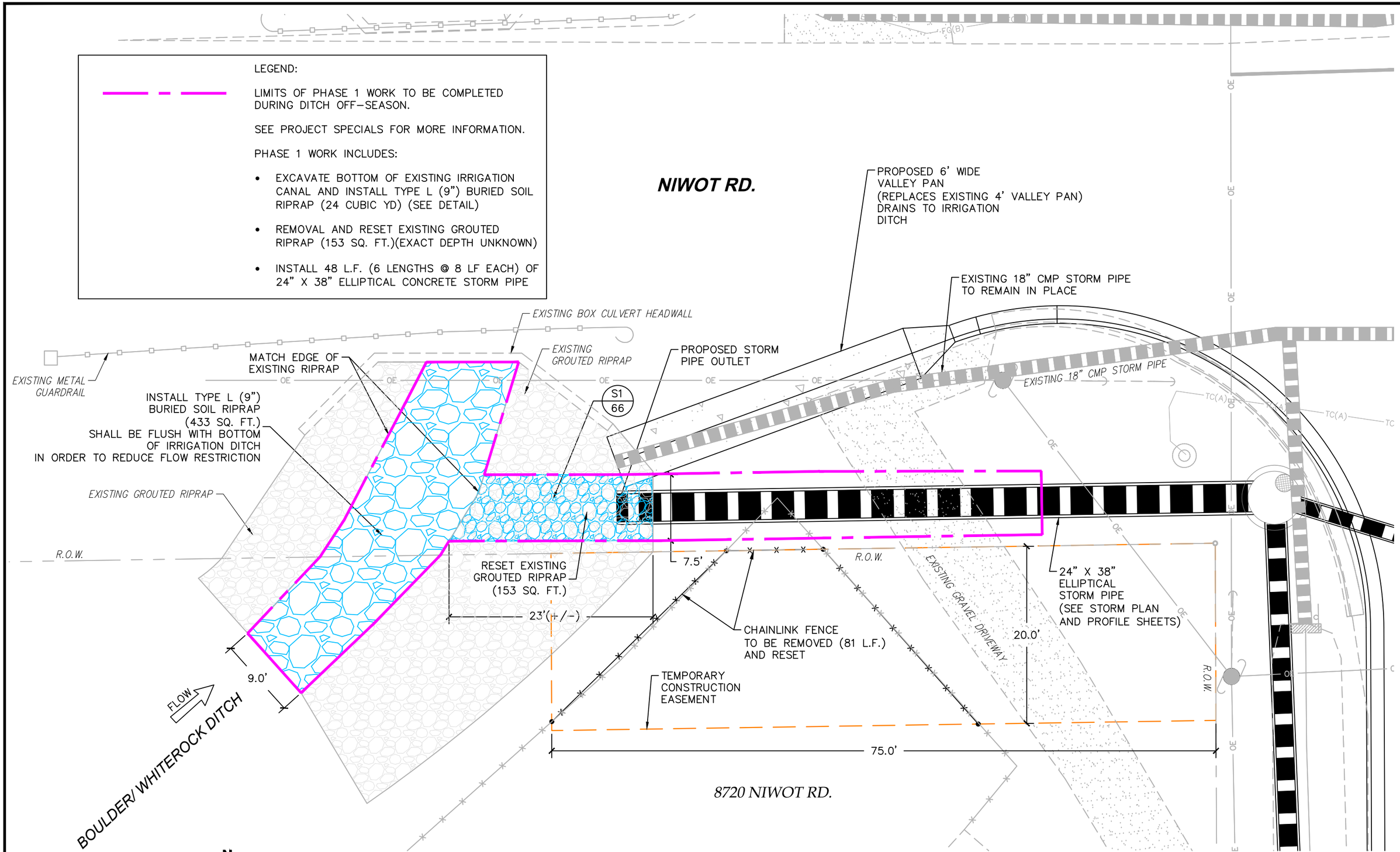

0 10 20
HORIZONTAL SCALE: 1"=10'

N

FOR CONSTRUCTION

CALL UTILITY NOTIFICATION CENTER OF COLORADO
811
CALL 2-BUSINESS DAYS IN ADVANCE BEFORE YOU DIG, GRADE, OR EXCAVATE FOR THE MARKING OF UNDERGROUND MEMBER UTILITIES

REVISIONS: NO.	DATE	REVISION DESCRIPTION:

BOULDER COUNTY PUBLIC WORKS
ENGINEERING DIVISION

DESIGNED:	CAD/C3D:	CHECKED:	DATE:
RL	RL	DW	07/30/2021

MORTON HEIGHTS-2021

PHASE 1-DITCH AND PIPE WORK

PROJECT NO: **RS-MOR-001** SHEET NO: **36**

C:\AUTOCAD\PROJECTS\MORTON HEIGHTS\PLAN SET\MORTON-HEIGHTS-BOULDER-WHITEROCK 01 JUL 2019.DWG LAST PLOTTED 7/30/2021 12:15 PM

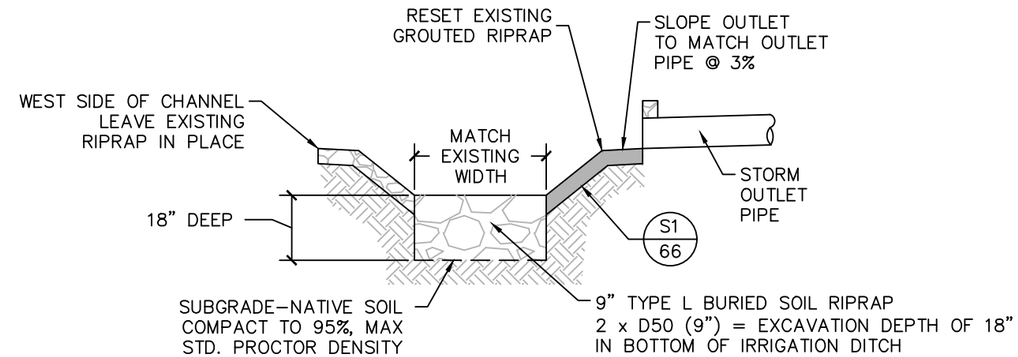

STORM DRAIN OUTFALL

N.T.S.

C:\AUTOCAD\PROJECTS\MORTON HEIGHTS\PLAN SET\MORTON-HEIGHTS-BOULDER-WHITEROCK 01 JUL 2019.DWG LAST PLOTTED 7/30/2021 12:15 PM

0 10 20

HORIZONTAL SCALE: 1"=10'

N

FOR CONSTRUCTION

CALL UTILITY NOTIFICATION CENTER OF COLORADO

811

CALL 2-BUSINESS DAYS IN ADVANCE BEFORE YOU DIG, GRADE, OR EXCAVATE FOR THE MARKING OF UNDERGROUND MEMBER UTILITIES

REVISIONS:	NO.	DATE	REVISION DESCRIPTION:

Boulder County

BOULDER COUNTY PUBLIC WORKS
ENGINEERING DIVISION

DESIGNED:	CAD/C3D:	CHECKED:	DATE:
RL	RL	DW	07/30/2021

MORTON HEIGHTS–2021

PHASE 1-DITCH DETAILS

PROJECT NO: **RS-MOR-001** SHEET NO: **37**

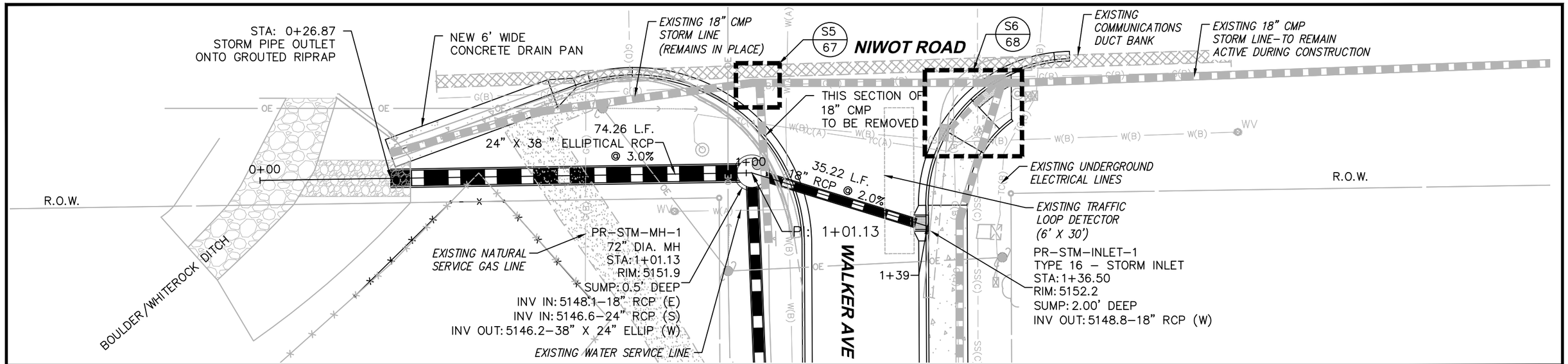

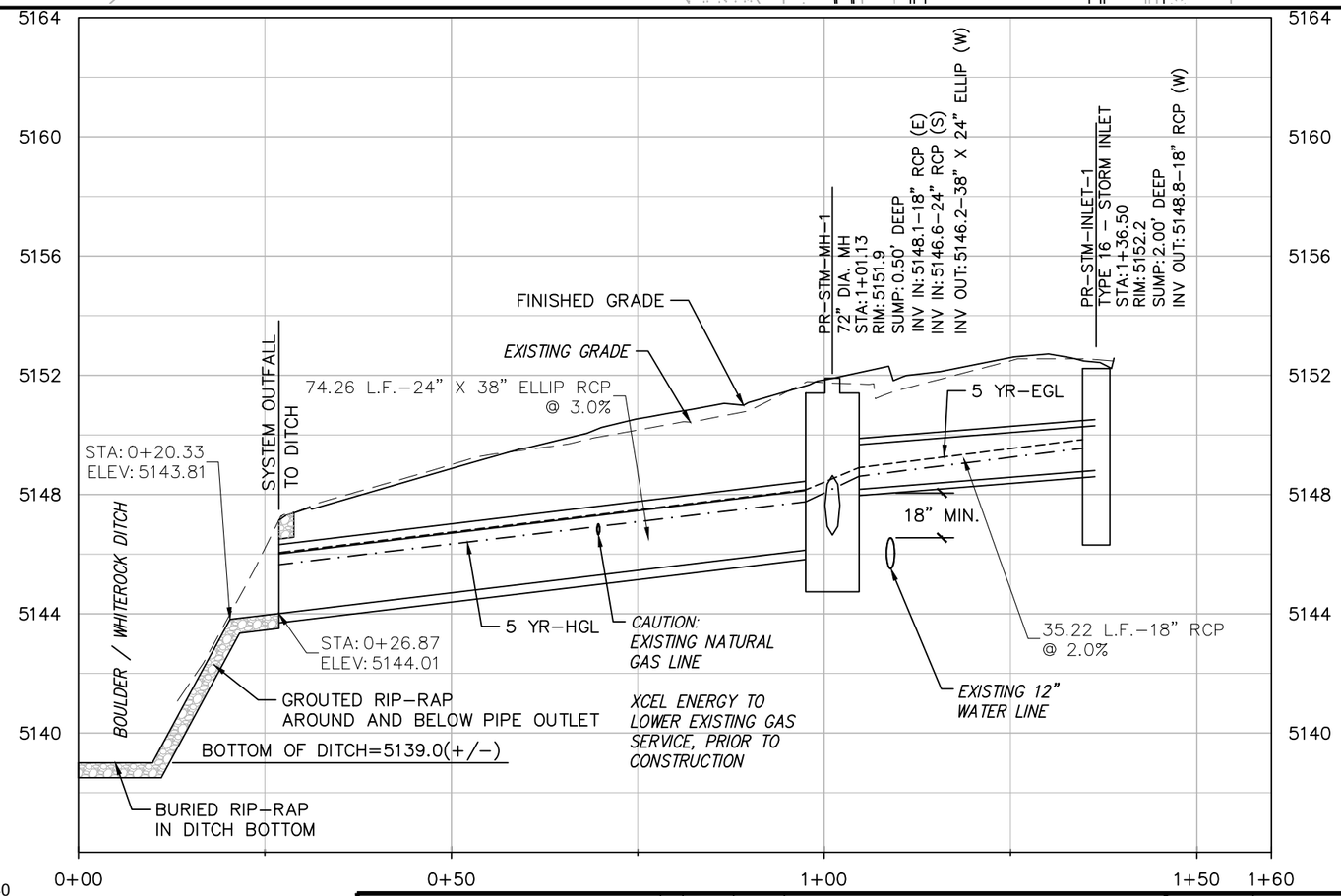

**NOTES:

1. EXISTING WATERLINE TO BE REPLACED BY LEFTHAND WATER DISTRICT, DURING THE CONSTRUCTION OF THIS PROJECT.
2. CONTRACTOR SHALL NOTIFY LEFTHAND WATER DISTRICT ONE WEEK PRIOR TO EXCAVATION OF THE STORM SEWER, TO ALLOW THE DISTRICT ADVANCE NOTICE FOR THE WATERLINE REPLACEMENT/RELOCATION WORK. FOUR WORKING DAYS ARE NEEDED TO REPLACE THE AFFECTED STRETCH OF EXISTING AC WATERLINE IN WALKER AVE.
3. LEFTHAND WATER DISTRICT CONTACT: STEVE BUCKBEE (303)530–4200 OR Sbuckbee@lefthandwater.org
4. ALL STORM MANHOLES ARE FLAT–TOP WITH ECCENTRIC FLAT SLAB MANHOLE LIDS.
5. CONTRACTOR SHALL TAKE CARE TO LINE THE STORM MANHOLE LID UP WITH MANHOLE STAIRS.
6. PIPE LENGTHS SHOWN ARE 2D, MEASURED FROM ℄ TO ℄ OF STRUCTURE(S).

N

0 20 40

HORIZONTAL SCALE: 1"=20'
VERTICAL SCALE: 1"=5'

FOR CONSTRUCTION

CALL UTILITY NOTIFICATION CENTER OF COLORADO
811
CALL 2–BUSINESS DAYS IN ADVANCE BEFORE YOU DIG, GRADE, OR EXCAVATE FOR THE MARKING OF UNDERGROUND MEMBER UTILITIES

REVISIONS: NO.	DATE	REVISION DESCRIPTION:

BOULDER COUNTY PUBLIC WORKS
ENGINEERING DIVISION

DESIGNED:	CAD/C3D:	CHECKED:	DATE:
RL	RL	DW	07/30/2021

MORTON HEIGHTS–2021
STORM PLAN & PROFILE-1
PROJECT NO: **RS-MOR-001** SHEET NO: **38**

C:\AUTOCAD\PROJECTS\MORTON HEIGHTS\PLAN SET\MORTON-HEIGHTS-STORM-1 14 MAR 2019.DWG LAST PLOTTED 7/30/2021 12:16 PM

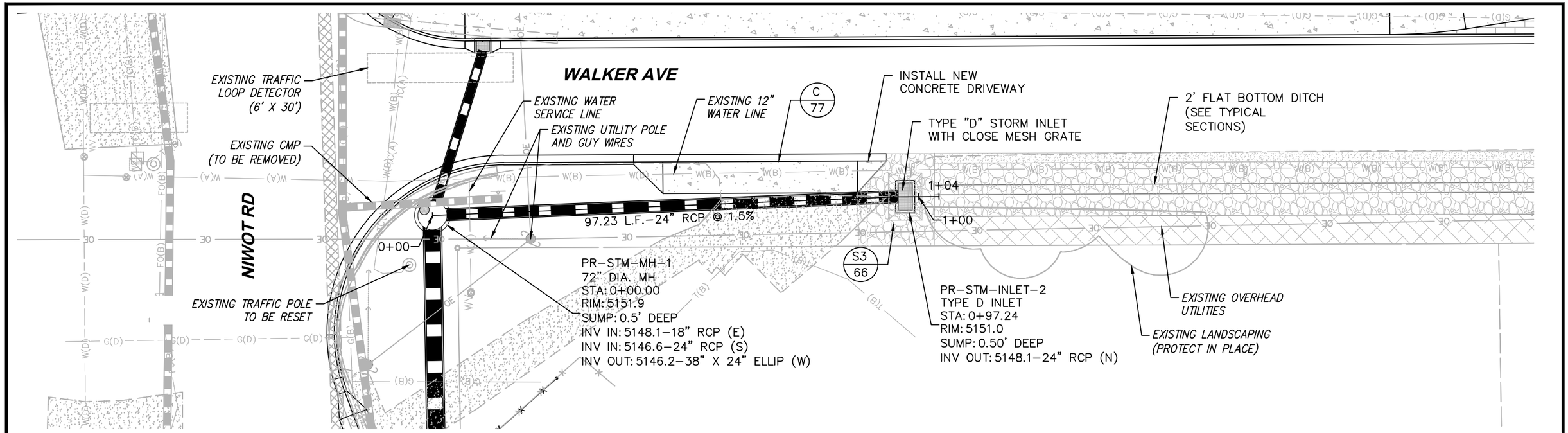

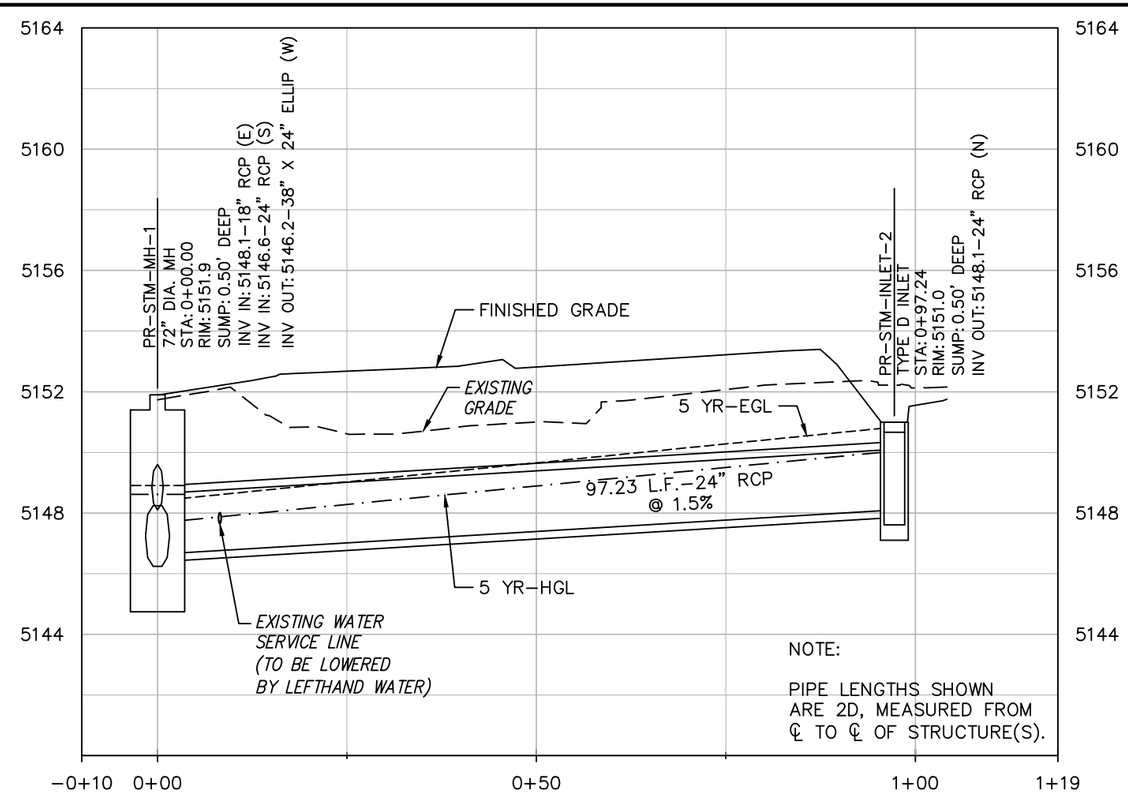

N

0 20 40

HORIZONTAL SCALE: 1"=20'
VERTICAL SCALE: 1"=5'

FOR CONSTRUCTION

CALL UTILITY NOTIFICATION CENTER OF COLORADO

811

CALL 2-BUSINESS DAYS IN ADVANCE BEFORE YOU DIG, GRADE, OR EXCAVATE FOR THE MARKING OF UNDERGROUND MEMBER UTILITIES

REVISIONS: NO.	DATE	REVISION DESCRIPTION:

BOULDER COUNTY PUBLIC WORKS
ENGINEERING DIVISION

DESIGNED:	CAD/C3D:	CHECKED:	DATE:
RL	RL	DW	07/30/2021

MORTON HEIGHTS-2021

STORM PLAN & PROFILE-2

PROJECT NO: **RS-MOR-001** SHEET NO: **39**

C:\AUTOCAD\PROJECTS\MORTON HEIGHTS\PLAN SET\MORTON-HEIGHTS-STORM-2 14 MAR 2019.DWG LAST PLOTTED 7/30/2021 12:16 PM

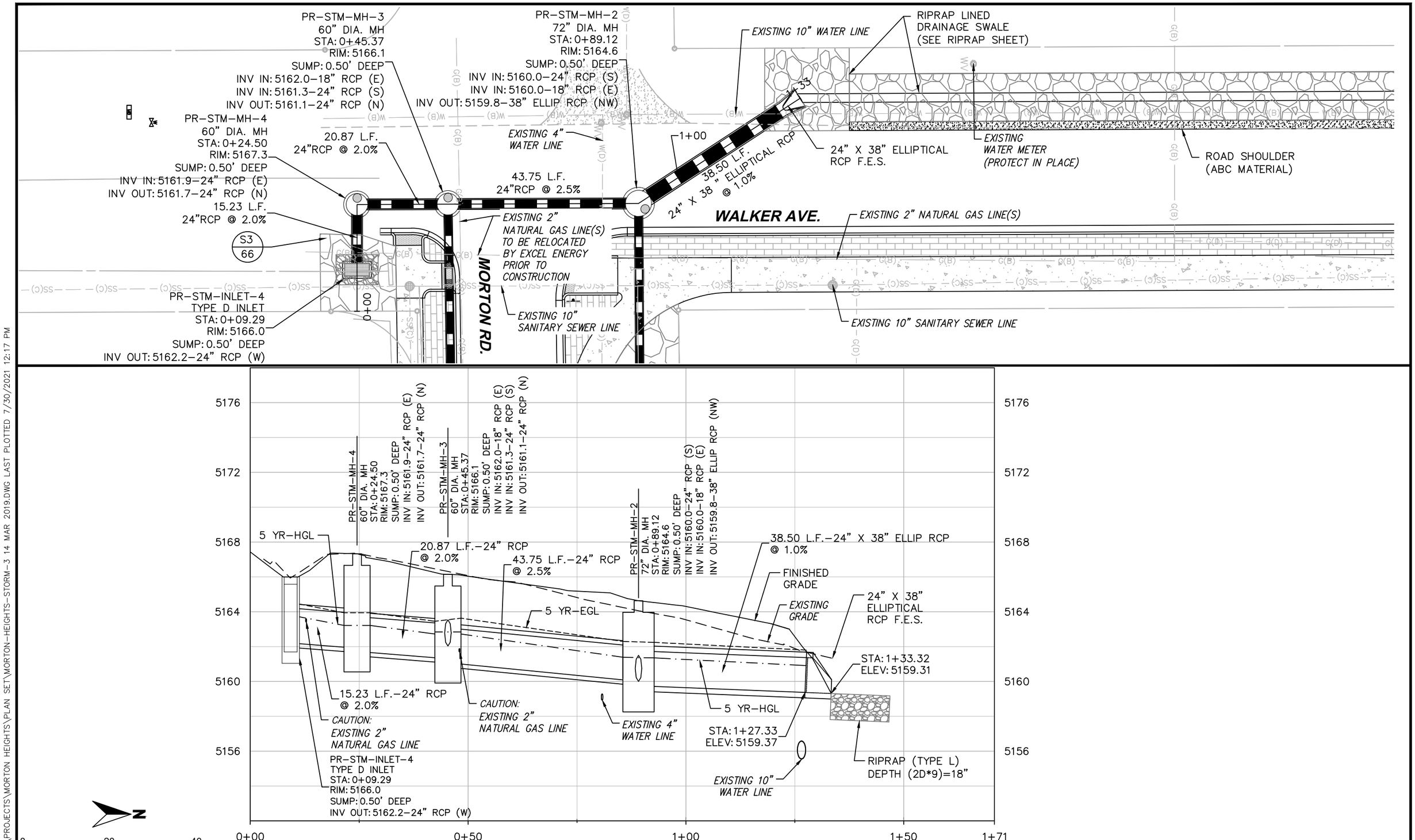

C:\AUTOCAD\PROJECTS\MORTON HEIGHTS\PLAN SET\MORTON-HEIGHTS-STORM-3 14 MAR 2019.DWG LAST PLOTTED 7/30/2021 12:17 PM

FOR CONSTRUCTION

CALL UTILITY NOTIFICATION CENTER OF COLORADO

811

CALL 2-BUSINESS DAYS IN ADVANCE BEFORE YOU DIG, GRADE, OR EXCAVATE FOR THE MARKING OF UNDERGROUND MEMBER UTILITIES

REVISIONS:	NO.	DATE	REVISION DESCRIPTION:

BOULDER COUNTY PUBLIC WORKS
ENGINEERING DIVISION

DESIGNED:	CAD/C3D:	CHECKED:	DATE:
RL	RL	DW	07/30/2021

MORTON HEIGHTS-2021

STORM PLAN & PROFILE-3

PROJECT NO: **RS-MOR-001** SHEET NO: **40**

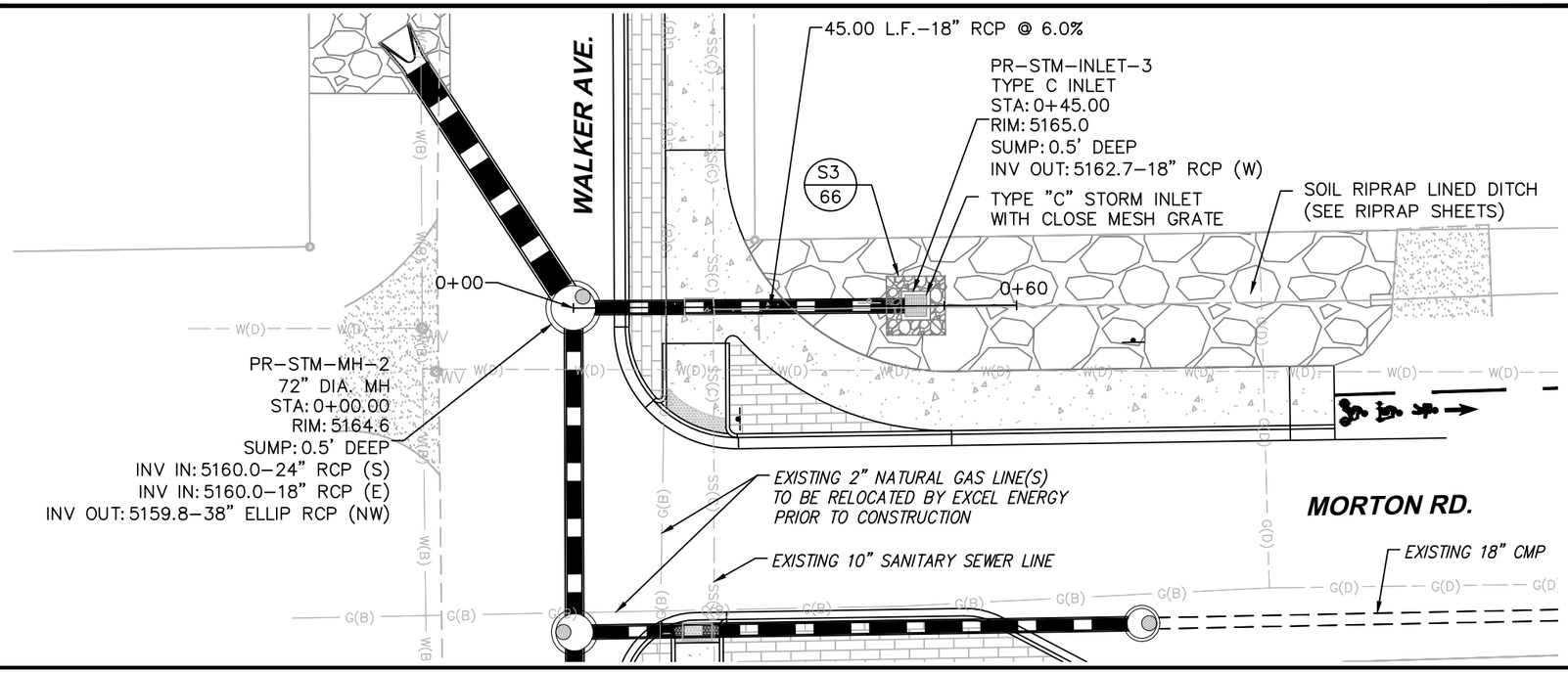

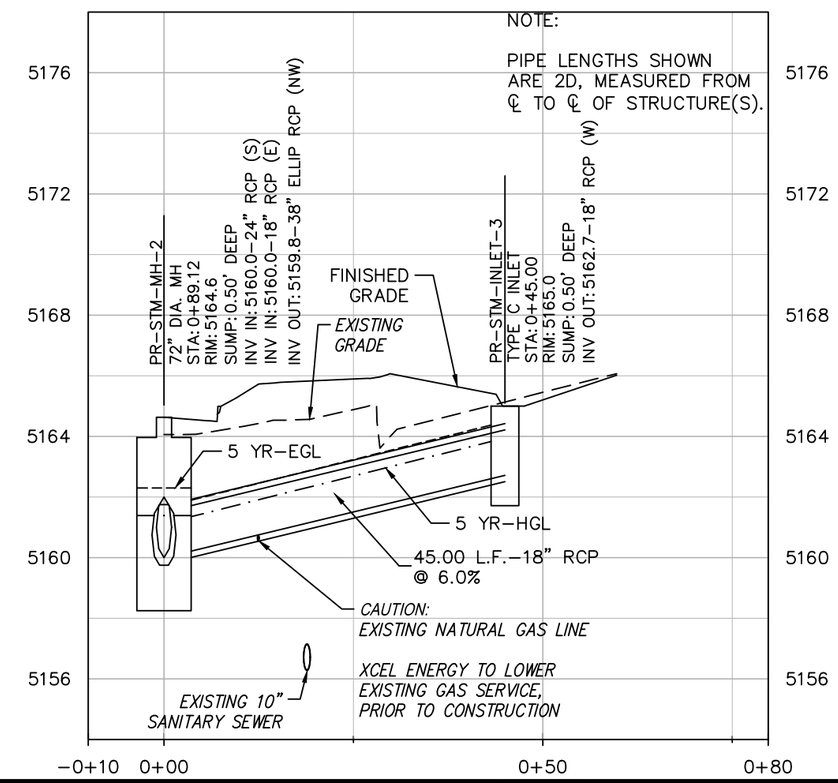

0 20 40

HORIZONTAL SCALE: 1"=20'
VERTICAL SCALE: 1"=5'

N

FOR CONSTRUCTION

CALL UTILITY NOTIFICATION CENTER OF COLORADO
811
CALL 2–BUSINESS DAYS IN ADVANCE BEFORE YOU DIG, GRADE, OR EXCAVATE FOR THE MARKING OF UNDERGROUND MEMBER UTILITIES

REVISIONS: NO.	DATE	REVISION DESCRIPTION:

BOULDER COUNTY PUBLIC WORKS
ENGINEERING DIVISION

DESIGNED:	CAD/C3D:	CHECKED:	DATE:
RL	RL	DW	07/30/2021

MORTON HEIGHTS–2021

STORM PLAN & PROFILE-4

PROJECT NO: **RS-MOR-001** SHEET NO: **41**

C:\AUTOCAD\PROJECTS\MORTON HEIGHTS\PLAN SET\MORTON–HEIGHTS–STORM–4 14 MAR 2019.DWG LAST PLOTTED 7/30/2021 12:18 PM

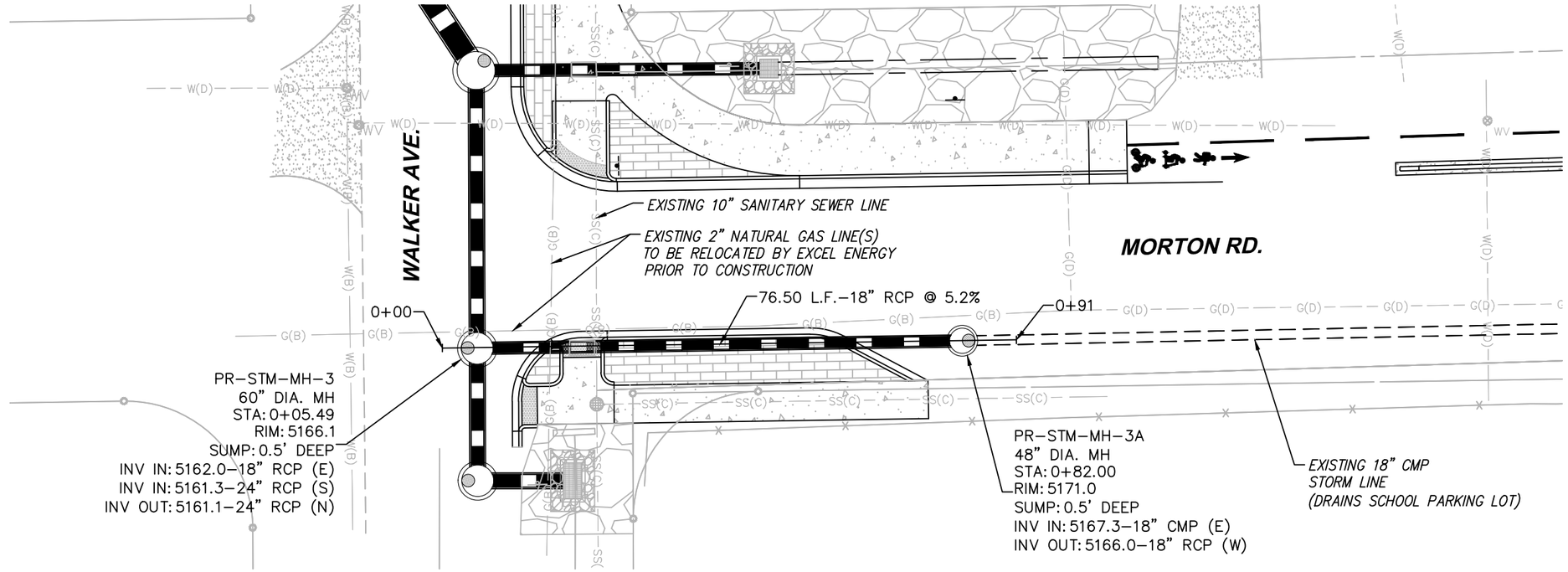

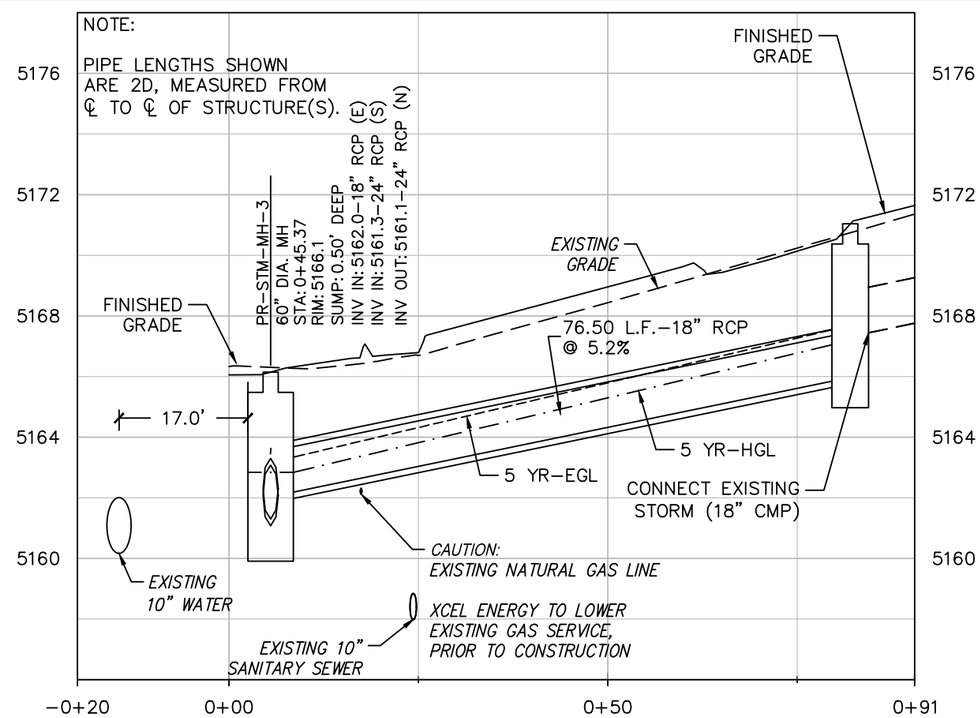

0 20 40

HORIZONTAL SCALE: 1"=20'
VERTICAL SCALE: 1"=5'

N

FOR CONSTRUCTION

CALL UTILITY NOTIFICATION CENTER OF COLORADO
811
CALL 2–BUSINESS DAYS IN ADVANCE BEFORE YOU DIG, GRADE, OR EXCAVATE FOR THE MARKING OF UNDERGROUND MEMBER UTILITIES

REVISIONS:	NO.	DATE	REVISION DESCRIPTION:

BOULDER COUNTY PUBLIC WORKS
ENGINEERING DIVISION

DESIGNED:	CAD/C3D:	CHECKED:	DATE:
RL	RL	DW	07/30/2021

MORTON HEIGHTS–2021

STORM PLAN & PROFILE-5

PROJECT NO: **RS-MOR-001** SHEET NO: **42**

C:\AUTOCAD\PROJECTS\MORTON HEIGHTS\PLAN SET\MORTON-HEIGHTS-STORM-5 14 MAR 2019.DWG LAST PLOTTED 7/30/2021 12:19 PM

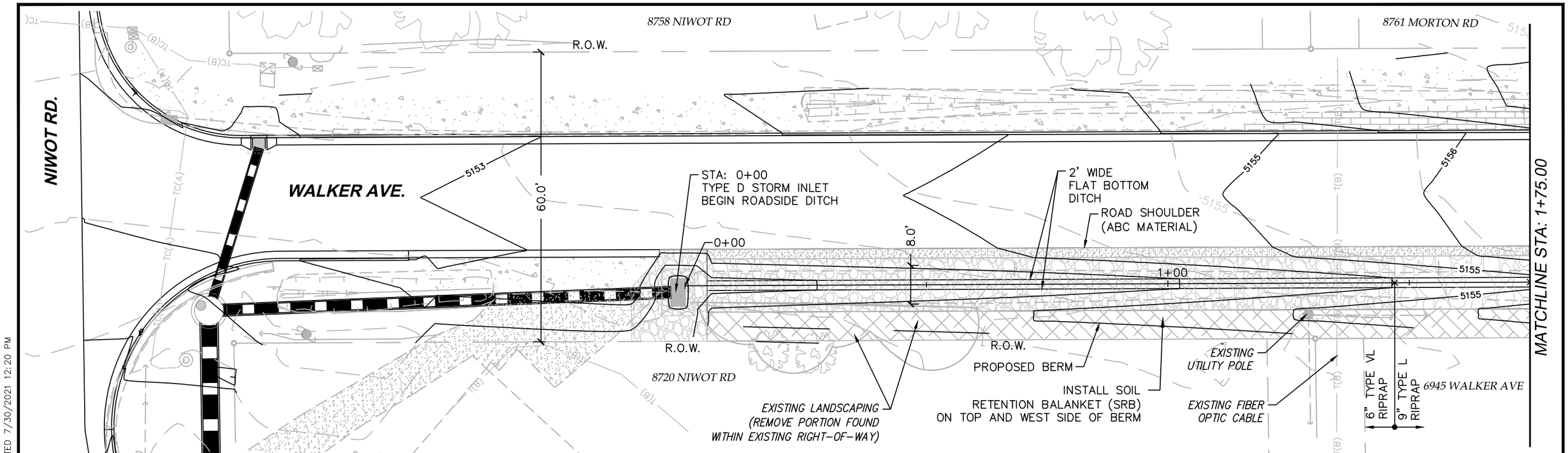

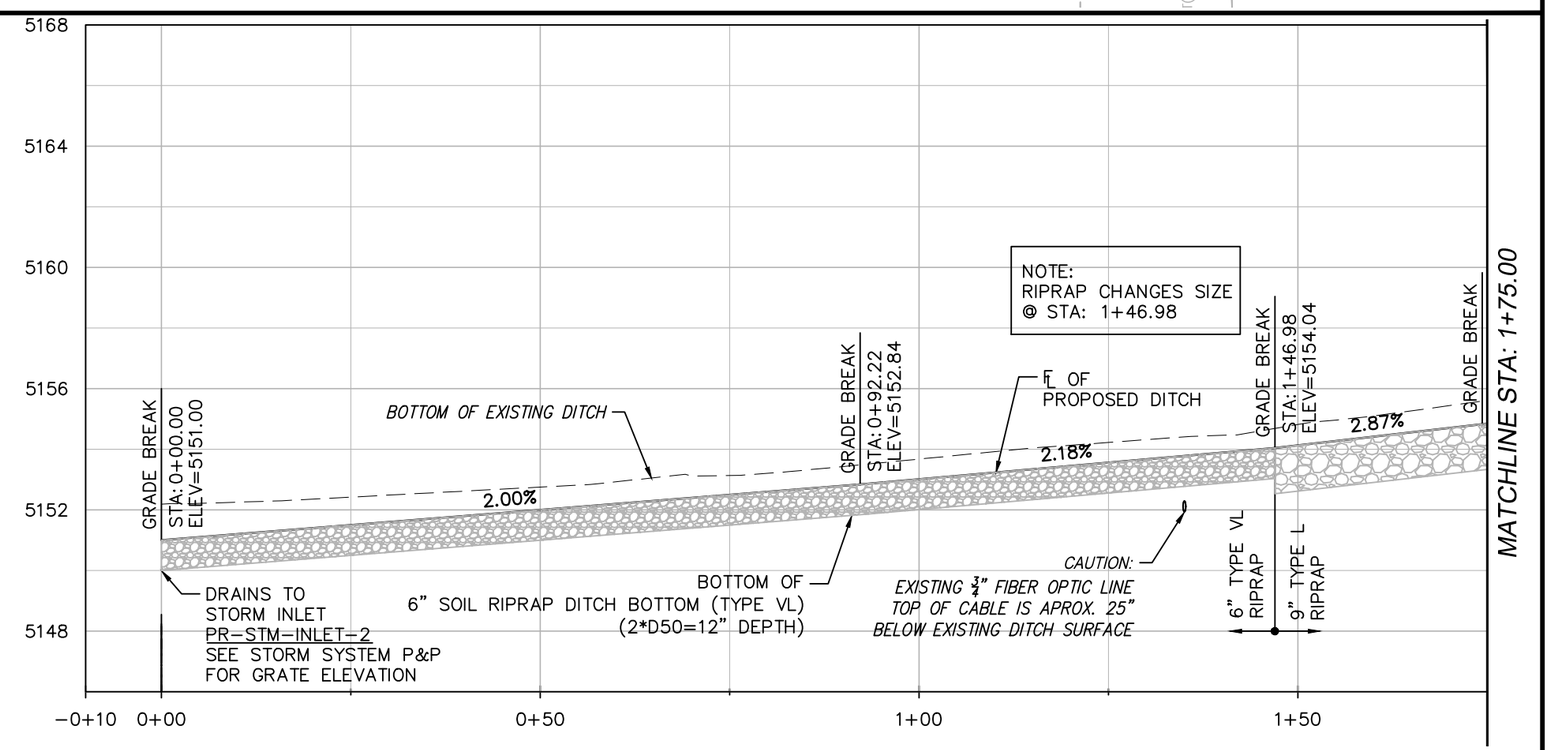

N

0 20 40

HORIZONTAL SCALE: 1"=20'
VERTICAL SCALE=1"=5'

FOR CONSTRUCTION

CALL UTILITY NOTIFICATION CENTER OF COLORADO

811

CALL 2-BUSINESS DAYS IN ADVANCE BEFORE YOU DIG, GRADE, OR EXCAVATE FOR THE MARKING OF UNDERGROUND MEMBER UTILITIES

REVISIONS:	NO.	DATE	REVISION DESCRIPTION:

BOULDER COUNTY PUBLIC WORKS
ENGINEERING DIVISION

DESIGNED:	CAD/C3D:	CHECKED:	DATE:
RL	RL	DW	07/30/2021

MORTON HEIGHTS-2021

WALKER AVE-DITCH (1)

PROJECT NO: **RS-MOR-001** SHEET NO: **43**

C:\AUTOCAD\PROJECTS\MORTON HEIGHTS\PLAN SET\MORTON-HEIGHTS-WALKER DITCH 03 MAR 2020.DWG LAST PLOTTED 7/30/2021 12:20 PM

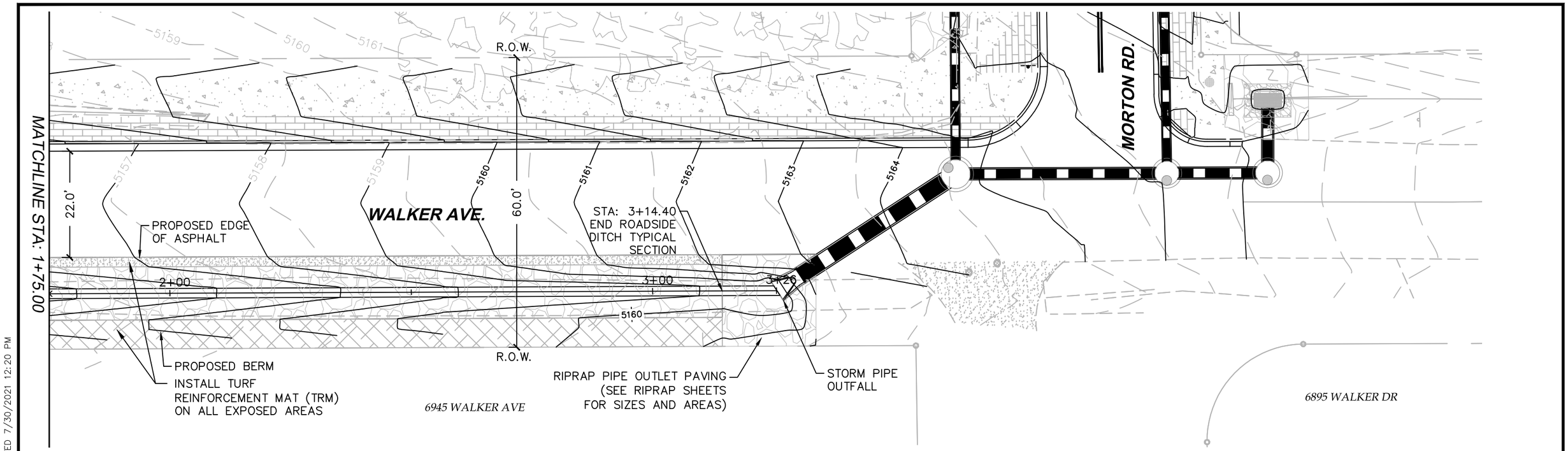

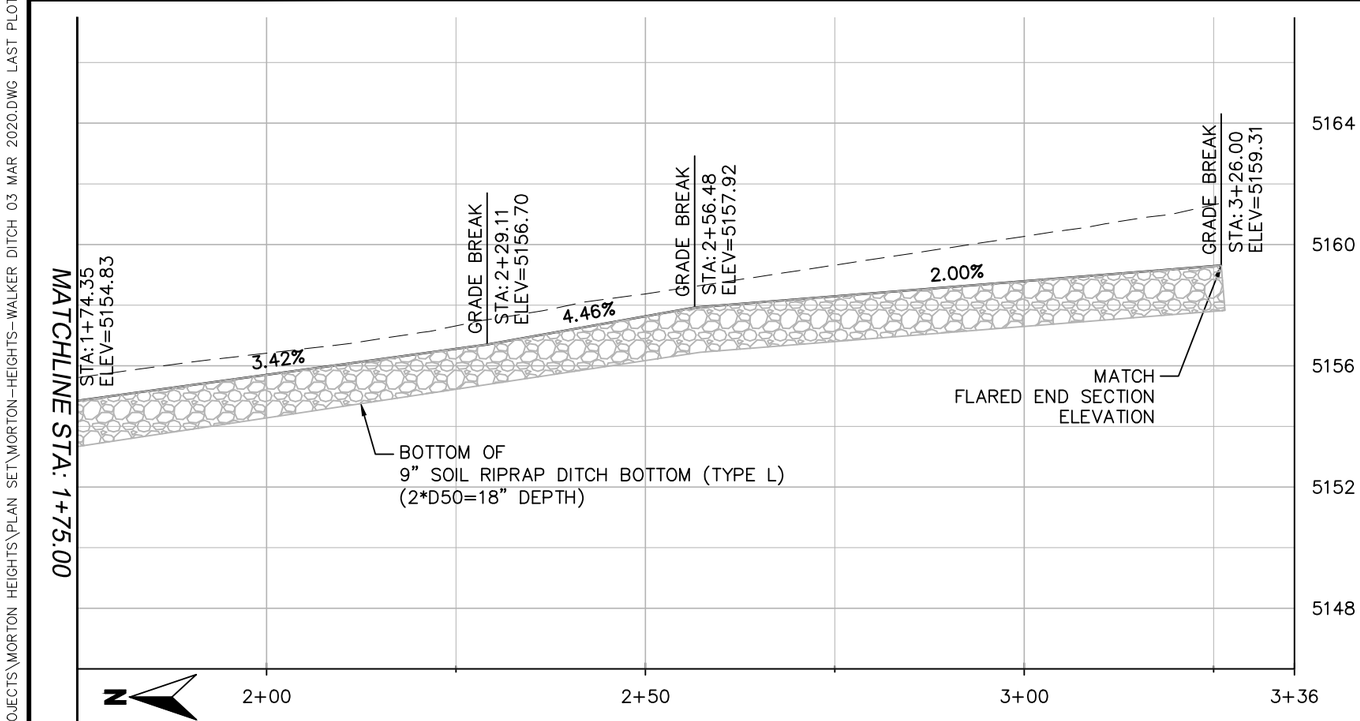

0 20 40

HORIZONTAL SCALE: 1"=20'
VERTICAL SCALE=1"=5'

FOR CONSTRUCTION

CALL UTILITY NOTIFICATION CENTER OF COLORADO

811

CALL 2-BUSINESS DAYS IN ADVANCE BEFORE YOU DIG, GRADE, OR EXCAVATE FOR THE MARKING OF UNDERGROUND MEMBER UTILITIES

REVISIONS:	NO.	DATE	REVISION DESCRIPTION:

BOULDER COUNTY PUBLIC WORKS
ENGINEERING DIVISION

DESIGNED:	CAD/C3D:	CHECKED:	DATE:
RL	RL	DW	07/30/2021

MORTON HEIGHTS-2021

WALKER AVE-DITCH (2)

PROJECT NO: **RS-MOR-001** SHEET NO: **44**

C:\AUTOCAD\PROJECTS\MORTON HEIGHTS\PLAN SET\MORTON-HEIGHTS-WALKER DITCH 03 MAR 2020.DWG LAST PLOTTED 7/30/2021 12:20 PM

EMBANKMENT CONSTRUCTION NOTES:

1. EMBANKMENT CONSTRUCTION SHALL CONSIST OF CONSTRUCTING ALL FILL AREAS, INCLUDING PREPARATION OF THE AREAS UPON WHICH THEY ARE TO BE PLACED, THE PLACING AND COMPACTING OF APPROVED MATERIAL WITHIN AREAS WHERE UNSUITABLE MATERIALS HAVE BEEN REMOVED, AND THE PLACING AND COMPACTING OF EMBANKMENT MATERIAL IN HOLES, PITS AND OTHER DEPRESSIONS WITHIN THE PROJECT AREA.

2. ONLY APPROVED MATERIALS SHALL BE USED IN THE CONSTRUCTION OF EMBANKMENTS AND BACKFILLS.

3. APPROVED MATERIALS SHALL CONSIST OF CLEAN ONSITE COHESIVE SOILS OR APPROVED IMPORTED SOILS. ONSITE COHESIVE SOILS OR IMPORTED SOILS SHALL BE PLACED AND COMPACTED IN HORIZONTAL LIFTS, USING EQUIPMENT AND PROCEDURES THAT PRODUCE RECOMMENDED MOISTURE CONTENTS AND DENSITIES THROUGHOUT THE LIFT AND EMBANKMENT HEIGHT. ONSITE OR IMPORTED COHESIVE SOILS SHALL BE COMPACTED WITHIN A MOISTURE CONTENT RANGE OF TWO PERCENT (2%) BELOW, TO TWO PERCENT (2%) ABOVE OPTIMUM MOISTURE CONTENT AND COMPACTED TO NINETY–FIVE PERCENT (95%) OF THE MAXIMUM STANDARD PROCTOR DENSITY (ASTM D698).

4. THE GROUND SURFACE UNDERLYING ALL FILLS SHALL BE CAREFULLY PREPARED BY REMOVING ALL ORGANIC MATTER, SCARIFICATION TO A DEPTH OF EIGHT (8) INCHES AND RECOMPACTING TO NINETY–FIVE PERCENT (95%) OF THE MAXIMUM STANDARD PROCTOR DENSITY (ASTM D698) AT OPTIMUM MOISTURE CONTENT + OR – TWO PERCENT (2%) PRIOR TO FILL PLACEMENT.

5. EMBANKMENT MATERIAL SHALL BE PLACED IN HORIZONTAL LAYERS NOT EXCEEDING 8 INCHES (LOOSE MEASUREMENT) AND SHALL BE COMPACTED TO NINETY FIVE PERCENT (95%) OF THE MAXIMUM STANDARD PROCTOR DENSITY (ASTM D698) AT OPTIMUM MOISTURE CONTENT + OR – TWO PERCENT (2%). A. EFFECTIVE SPREADING EQUIPMENT SHALL BE USED ON EACH LIFT TO OBTAIN UNIFORM THICKNESS PRIOR TO COMPACTING. B. AS THE COMPACTION OF EACH LAYER PROGRESSES, CONTINUOUS LEVELING AND MANIPULATING REQUIRED TO ENSURE UNIFORM DENSITY.

6. MATERIALS WHICH ARE REMOVED FROM EXCAVATIONS BENEATH THE WATER TABLE MAY BE OVER THE OPTIMUM MOISTURE CONTENT AND SHALL BE REQUIRED TO BE DRIED OUT PRIOR TO REUSING THEM.

7. CROSS HAULING OR OTHER ACTION AS APPROPRIATE WILL BE ORDERED WHEN NECESSARY TO ENSURE THAT THE BEST AVAILABLE MATERIAL IS PLACED IN CRITICAL AREAS OF EMBANKMENTS,INCLUDING THE TOP TWO (2) FEET OF ALL EMBANKMENTS. NO ADDITIONAL PAYMENT WILL BE MADE FOR CROSS HAULING ORDERED BY ENGINEER.

8. FROZEN MATERIALS SHALL NOT BE USED IN CONSTRUCTION OF EMBANKMENTS.

9. DURING THE CONSTRUCTION OF THE DITCHES/SWALES, THE DITCH BOTTOM SHALL BE MAINTAINED IN SUCH CONDITION THAT IT WILL BE WELL DRAINED AT ALL TIMES.

10. EXCAVATION OR EMBANKMENT (FILL), AND STRUCTURAL BACKFILL WORK EITHER COMPLETED OR IN A STAGE OF COMPLETION THAT IS EITHER ERODED OR WASHED AWAY OR BECOMES UNSTABLE AS A RESULT OF EITHER RAINS, SNOW, SNOW MELT, CHANNEL FLOWS, OR LACK OF PROPER WATER CONTROL SHALL BE EITHER REMOVED AND REPLACED, RECOMPACTED, OR RESHAPED AS DIRECTED BY ENGINEER AND IN ACCORDANCE WITH THE DRAWINGS AND SPECIFICATIONS AT CONTRACTOR'S SOLE EXPENSE.

11. REMOVED UNSUITABLE MATERIALS SHALL BE HAULED AWAY AND DISPOSED OF AT CONTRACTOR'S EXPENSE. PLACING OF REPLACEMENT MATERIALS FOR REMOVED UNSUITABLE MATERIALS SHALL BE PURCHASED, PLACED, AND COMPACTED AT CONTRACTOR'S EXPENSE.

12. PROOF ROLLING: PROOF ROLLING WITH A HEAVY RUBBER TIRED ROLLER SHALL BE REQUIRED, IF DESIGNATED ON THE DRAWINGS OR WHEN ORDERED BY ENGINEER.

13. PROOF ROLLING SHALL BE DONE AFTER SPECIFIED COMPACTION HAS BEEN OBTAINED. AREAS FOUND TO BE WEAK AND THOSE AREAS WHICH FAILED SHALL BE RIPPED, SCARIFIED, WETTED IF NECESSARY, AND RECOMPACTED TO THE REQUIREMENTS FOR DENSITY AND MOISTURE AT CONTRACTOR'S EXPENSE.

14. PROOF ROLLING SHALL BE DONE WITH EQUIPMENT AND IN A MANNER ACCEPTABLE TO ENGINEER. PROOF ROLLING AS SHOWN ON THE DRAWINGS OR AS ORDERED BY ENGINEER SHALL NOT BE MEASURED AND PAID FOR SEPARATELY, BUT SHALL BE INCLUDED IN THE UNIT PRICES BID FOR THE WORK.

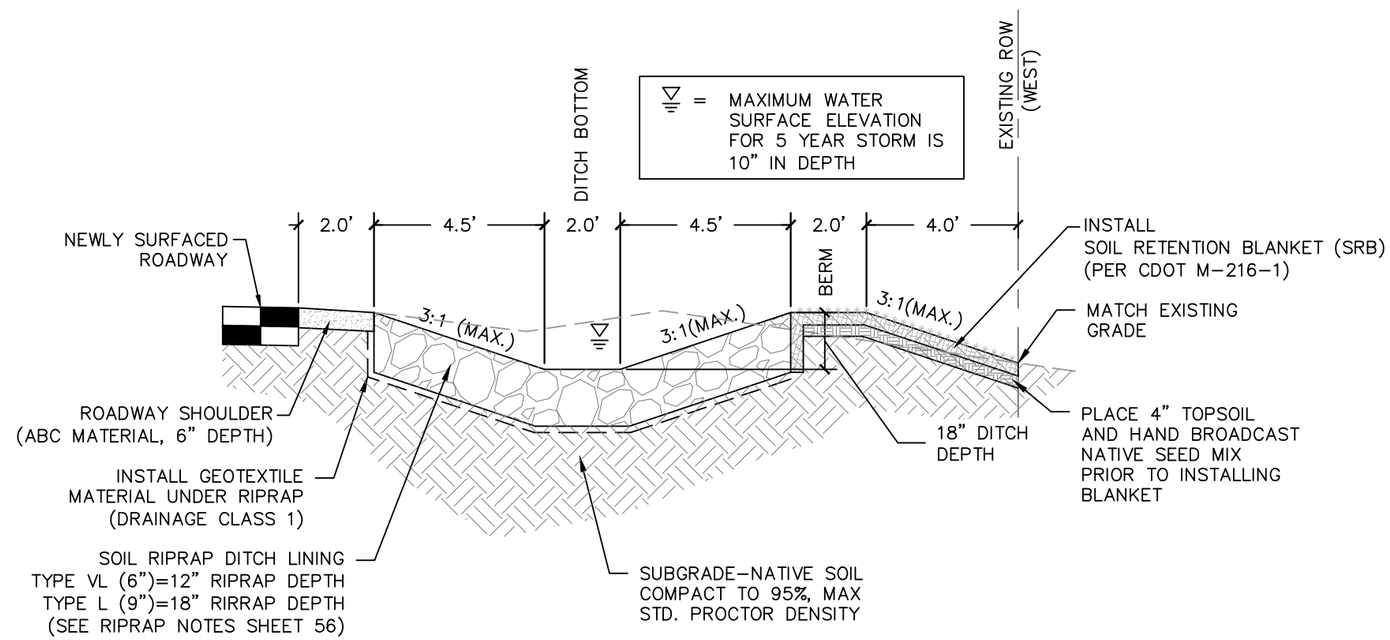

NOTES:

1. COMPACT FILL/EMBANKMENT IN 3" LIFTS AS PLACED.

WALKER AVE.- DITCH SECTION

(LOOKING SOUTH)
SCALE: 1"=4'

FOR CONSTRUCTION

CALL UTILITY NOTIFICATION CENTER OF COLORADO
811
CALL 2–BUSINESS DAYS IN ADVANCE BEFORE YOU DIG, GRADE, OR EXCAVATE FOR THE MARKING OF UNDERGROUND MEMBER UTILITIES

REVISIONS: NO.	DATE	REVISION DESCRIPTION:

BOULDER COUNTY PUBLIC WORKS
ENGINEERING DIVISION

DESIGNED:	CAD/C3D:	CHECKED:	DATE:
RL	RL	DW	07/30/2021

MORTON HEIGHTS–2021
WALKER AVE-DITCH SECTION AND NOTES
PROJECT NO: RS-MOR-001 SHEET NO: 45

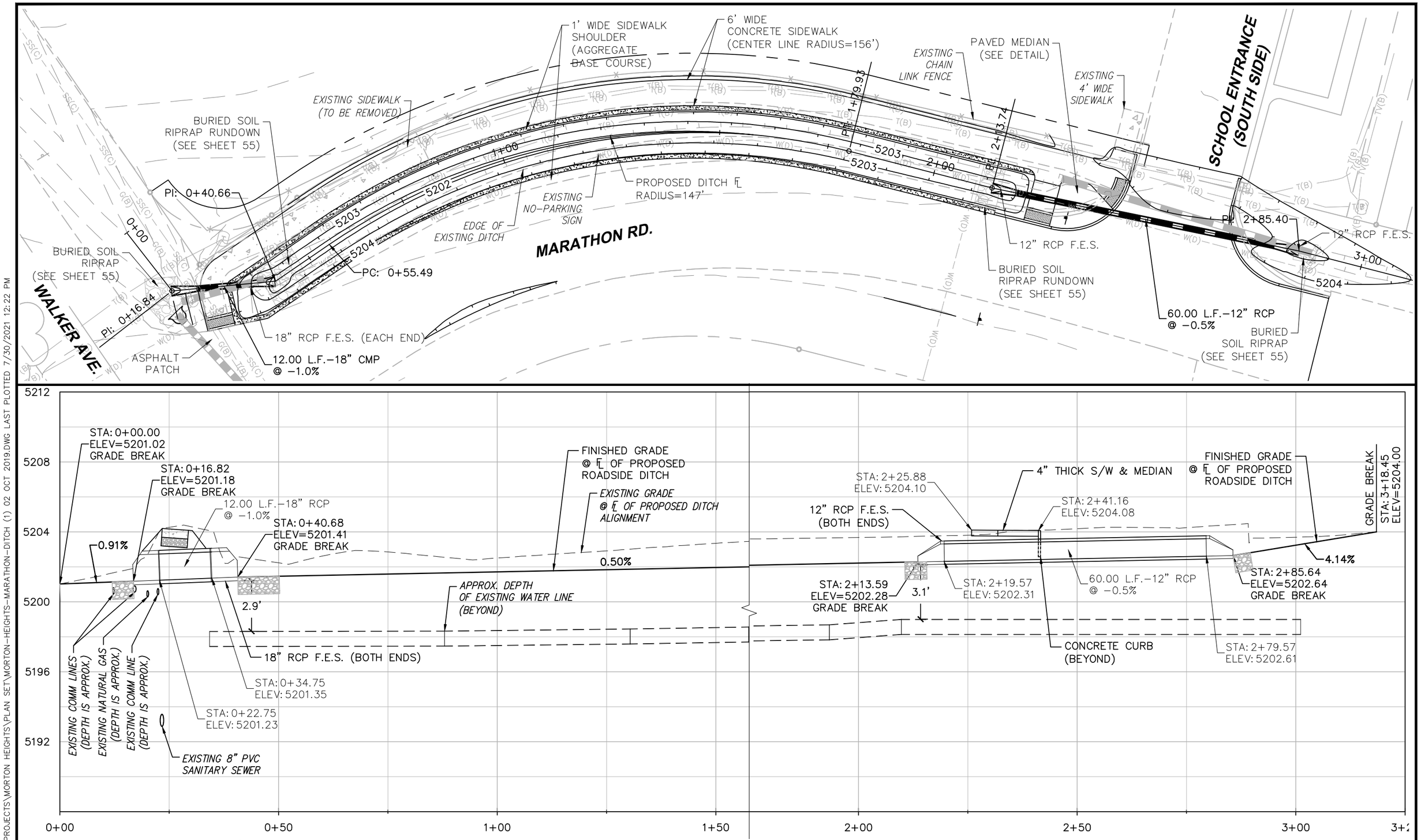

FOR CONSTRUCTION

CALL UTILITY NOTIFICATION CENTER OF COLORADO
811
CALL 2-BUSINESS DAYS IN ADVANCE BEFORE YOU DIG, GRADE, OR EXCAVATE FOR THE MARKING OF UNDERGROUND MEMBER UTILITIES

REVISIONS: NO.	DATE	REVISION DESCRIPTION:

BOULDER COUNTY PUBLIC WORKS
ENGINEERING DIVISION

DESIGNED:	CAD/C3D:	CHECKED:	DATE:
RL	RL	DW	07/30/2021

MORTON HEIGHTS-2021
MARATHON RD STORM (1)
PROJECT NO: RS-MOR-001 SHEET NO: 46

C:\AUTOCAD\PROJECTS\MORTON HEIGHTS\PLAN SET\MORTON-HEIGHTS-MARATHON-DITCH (1) 02 OCT 2019.DWG LAST PLOTTED 7/30/2021 12:22 PM

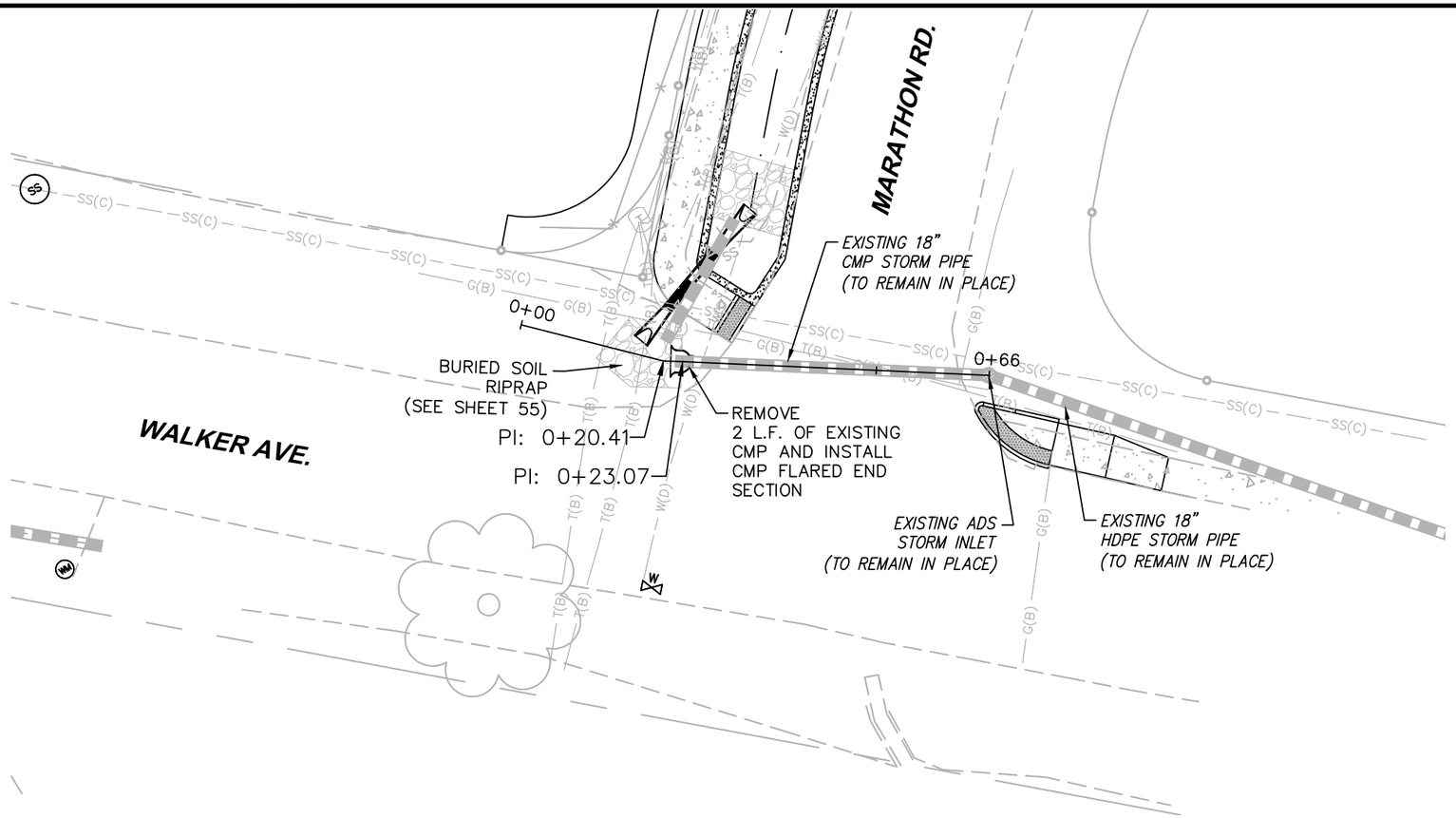

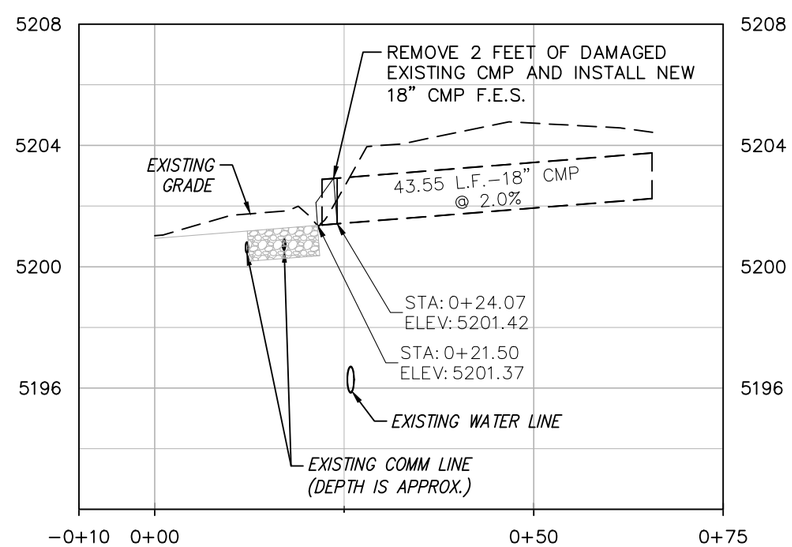

0 20 40

HORIZONTAL SCALE: 1"=20'
VERTICAL SCALE: 1"=5'

N

FOR CONSTRUCTION

CALL UTILITY NOTIFICATION CENTER OF COLORADO

811

CALL 2-BUSINESS DAYS IN ADVANCE BEFORE YOU DIG, GRADE, OR EXCAVATE FOR THE MARKING OF UNDERGROUND MEMBER UTILITIES

REVISIONS: NO.	DATE	REVISION DESCRIPTION:

BOULDER COUNTY PUBLIC WORKS
ENGINEERING DIVISION

DESIGNED:	CAD/C3D:	CHECKED:	DATE:
RL	RL	DW	07/30/2021

MORTON HEIGHTS-2021

MARATHON RD STORM (2)

PROJECT NO: **RS-MOR-001** SHEET NO: **47**

C:\AUTOCAD\PROJECTS\MORTON HEIGHTS\PLAN SET\MORTON-HEIGHTS-MARATHON-DITCH (2) 02 OCT 2019.DWG LAST PLOTTED 7/30/2021 12:23 PM

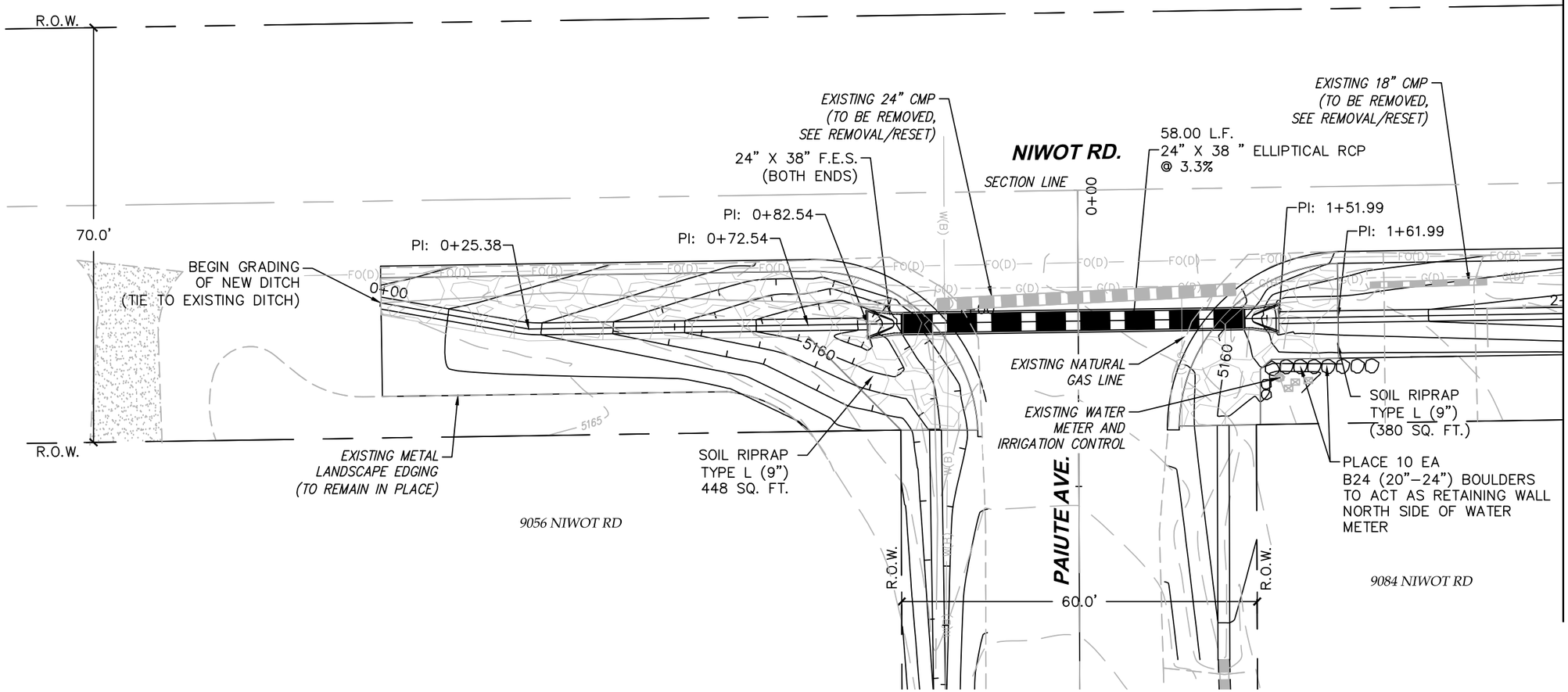

NOTES:

1. SUBSURFACE UTILITY INVESTIGATION (S.U.E.) WAS NOT PERFORMED ON THIS SECTION OF THE PROJECT.
2. EXISTING UTILITIES THAT WERE IN POTENTIAL CONFLICT WITH THE PROPOSED STORM PIPE(S) WERE POTHOLED AND SURVEYED IN ORDER TO IDENTIFY THEIR LOCATION AND ELIMINATE CONFLICTS DURING CONSTRUCTION.
3. CONTRACTOR SHALL CONTACT 811 FOR UTILITY MARKINGS PRIOR TO EXCAVATION.
4. ALL STORM PIPES ARE TO HAVE A MINIMUM OF 12" OF COVER.
5. ENCASE EXISTING LEFTHAND WATER DISTRICT WATERLINE WITH 5" THICK CONCRETE FOR 10' IN EACH DIRECTION ANYWHERE 18" OF CLEARANCE IS NOT AVAILABLE.

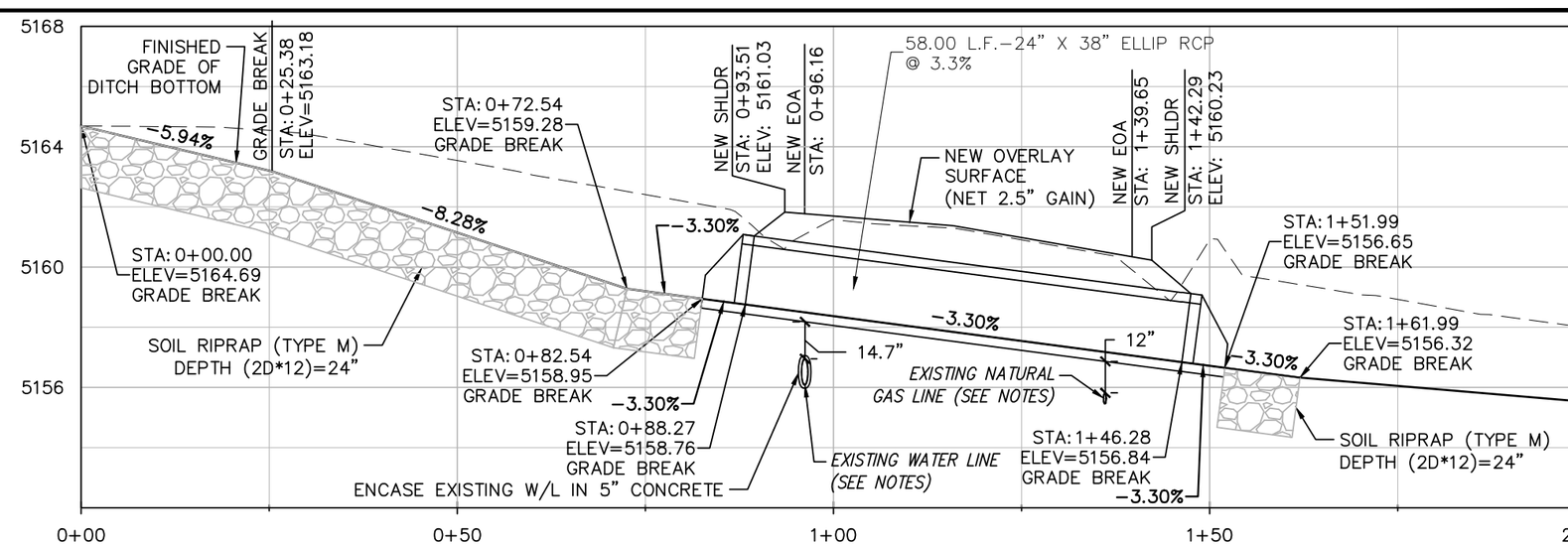

N

0 20 40

HORIZONTAL SCALE: 1"=20'

FOR CONSTRUCTION

CALL UTILITY NOTIFICATION CENTER OF COLORADO

811

CALL 2-BUSINESS DAYS IN ADVANCE BEFORE YOU DIG, GRADE, OR EXCAVATE FOR THE MARKING OF UNDERGROUND MEMBER UTILITIES

REVISIONS:	NO.	DATE	REVISION DESCRIPTION:

BOULDER COUNTY PUBLIC WORKS
ENGINEERING DIVISION

DESIGNED:	CAD/C3D:	CHECKED:	DATE:
RL	RL	DW	07/30/2021

MORTON HEIGHTS–2021

PAIUTE-NIWOT STORM (1)

PROJECT NO: **RS-MOR-001** SHEET NO: **48**

C:\AUTOCAD\PROJECTS\MORTON HEIGHTS\PLAN SET\MORTON-HEIGHTS-PAIUTE-NIWOT STORM 21 JAN 2020.DWG LAST PLOTTED 7/30/2021 12:24 PM

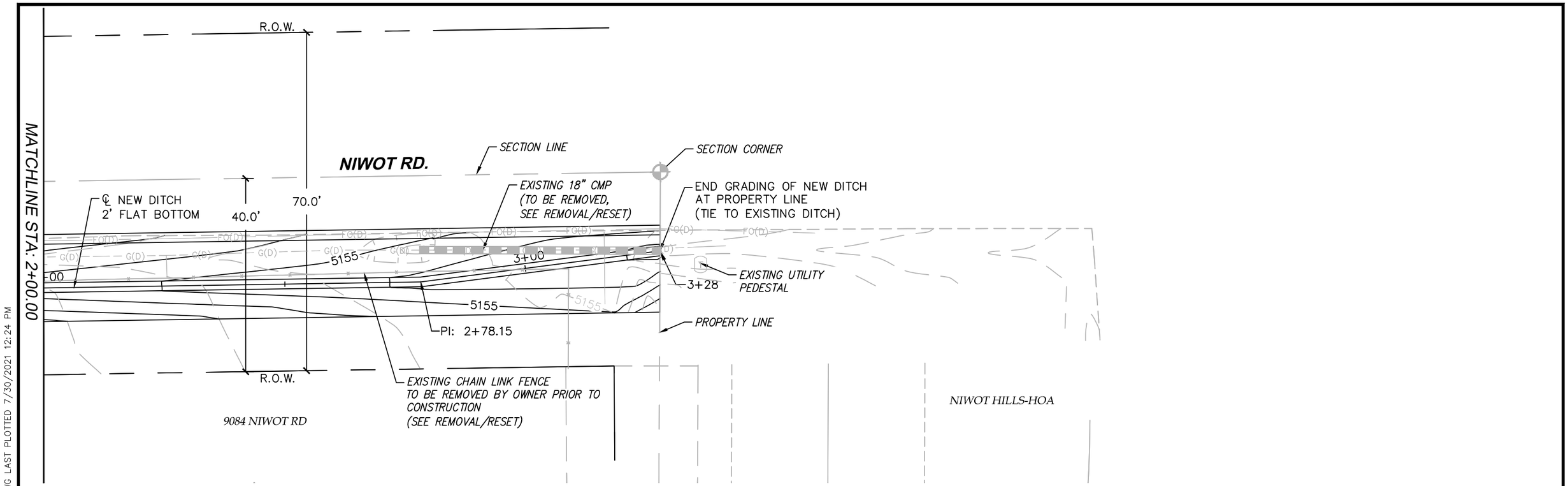

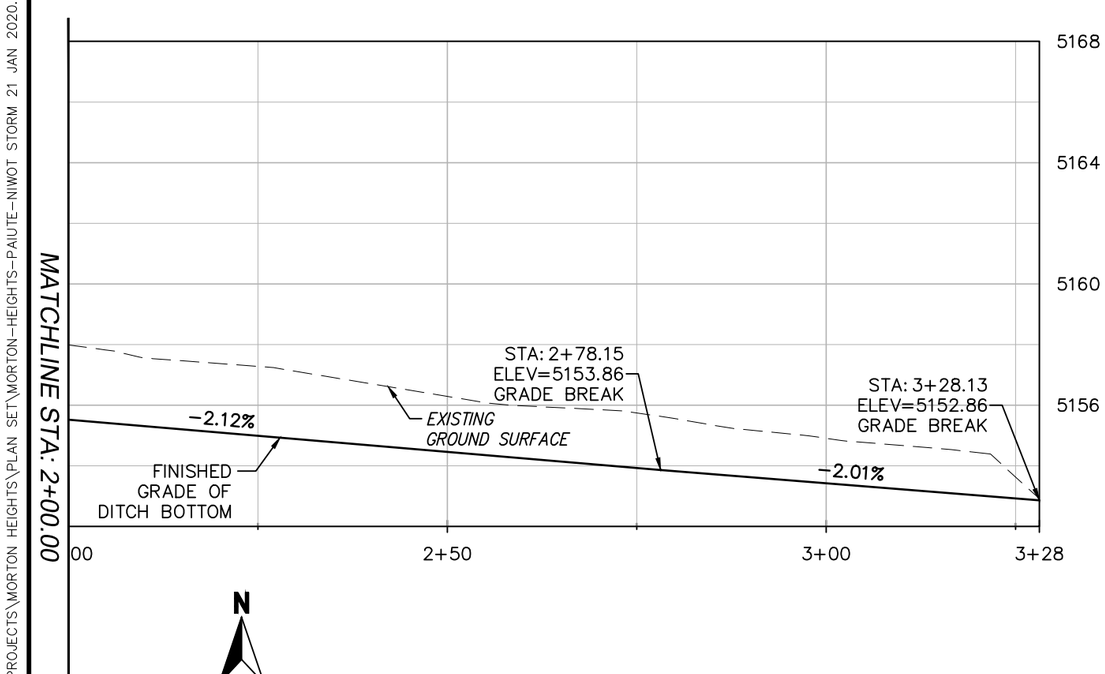

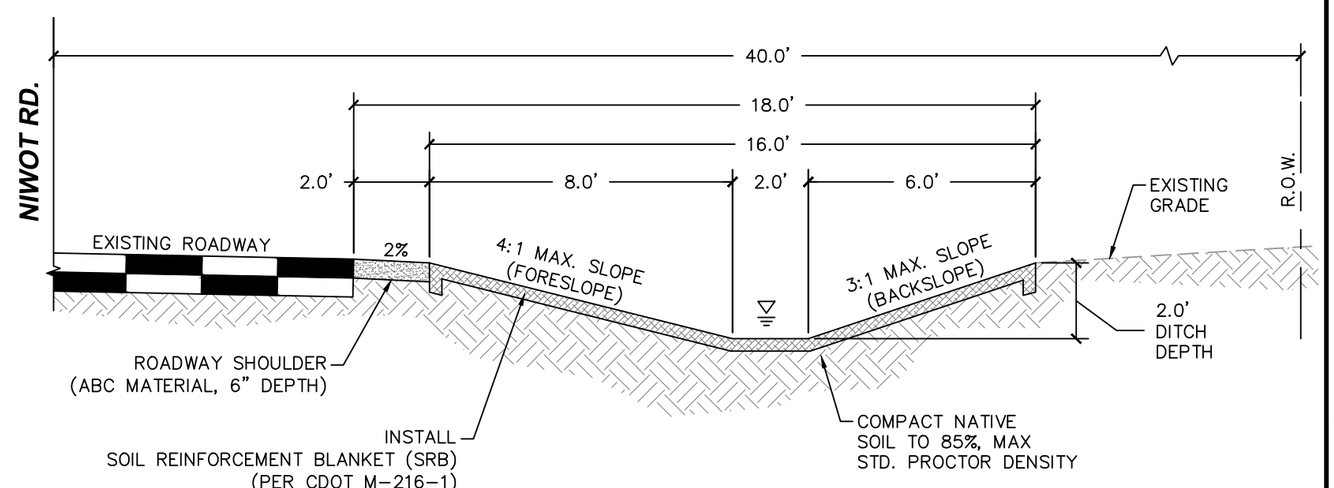

▽ = MAXIMUM WATER SURFACE ELEVATION FOR 5 YEAR STORM (DEPTH=8")

ROADSIDE DITCH - NIWOT RD.

(LOOKING EAST)
SCALE: 1"=4'

N

0 20 40

HORIZONTAL SCALE: 1"=20'

FOR CONSTRUCTION

CALL UTILITY NOTIFICATION CENTER OF COLORADO
811
CALL 2-BUSINESS DAYS IN ADVANCE BEFORE YOU DIG, GRADE, OR EXCAVATE FOR THE MARKING OF UNDERGROUND MEMBER UTILITIES

REVISIONS: NO.	DATE	REVISION DESCRIPTION:

BOULDER COUNTY PUBLIC WORKS
ENGINEERING DIVISION

DESIGNED:	CAD/C3D:	CHECKED:	DATE:
RL	RL	DW	07/30/2021

MORTON HEIGHTS-2021

PAIUTE-NIWOT STORM (2)

PROJECT NO: **RS-MOR-001** SHEET NO: **49**

C:\AUTOCAD\PROJECTS\MORTON HEIGHTS\PLAN SET\MORTON-HEIGHTS-PAIUTE-NIWOT STORM 21 JAN 2020.DWG LAST PLOTTED 7/30/2021 12:24 PM

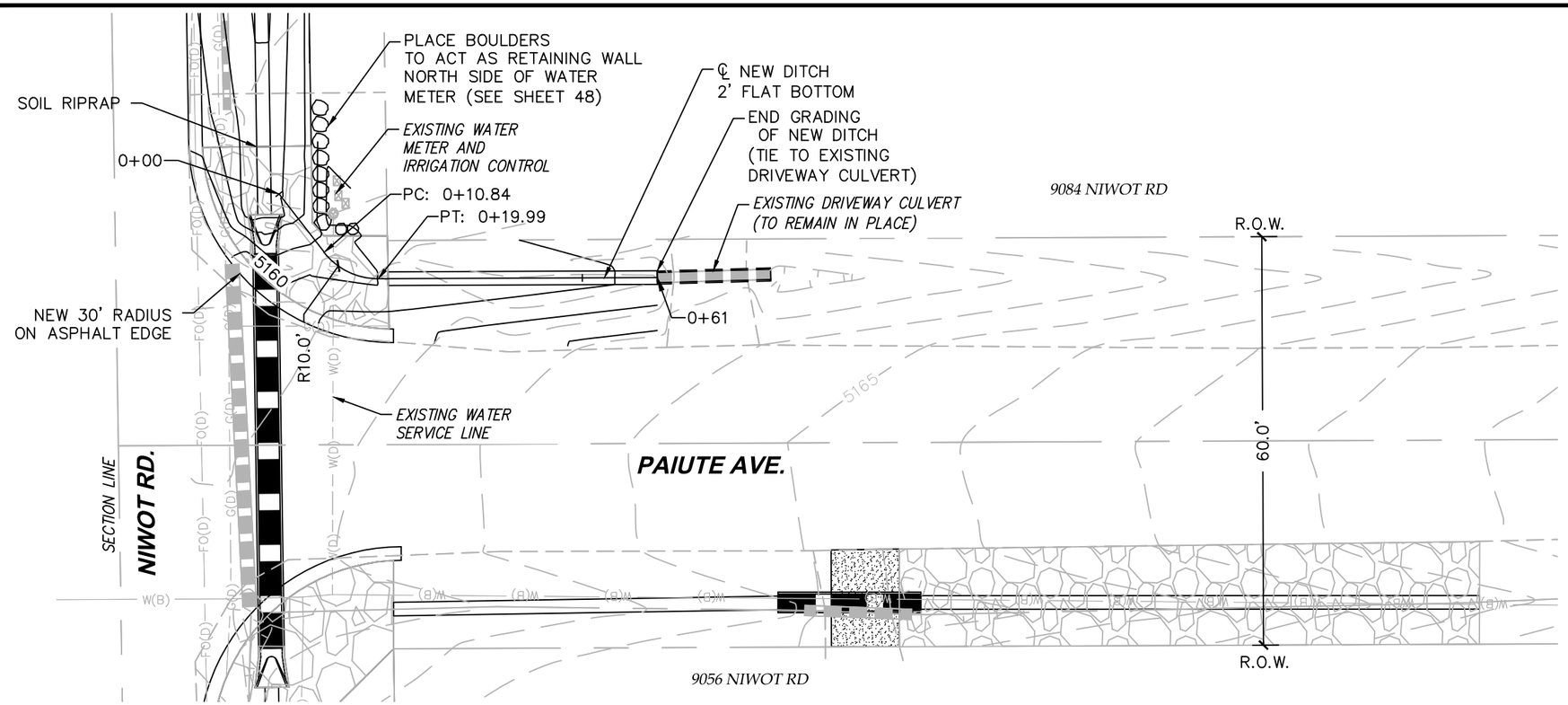

NOTES:

1. SUBSURFACE UTILITY INVESTIGATION (S.U.E.) WAS NOT PERFORMED ON THIS SECTION OF THE PROJECT.
2. CONTRACTOR SHALL CONTACT 811 FOR UTILITY MARKINGS PRIOR TO EXCAVATION.
3. CONTRACTOR SHALL CONFIRM DEPTHS OF EXISTING UTILITIES PRIOR TO CONSTRUCTION.

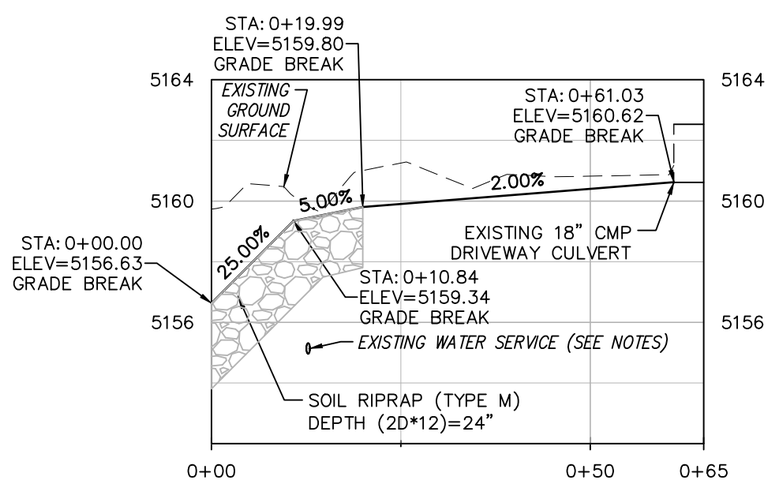

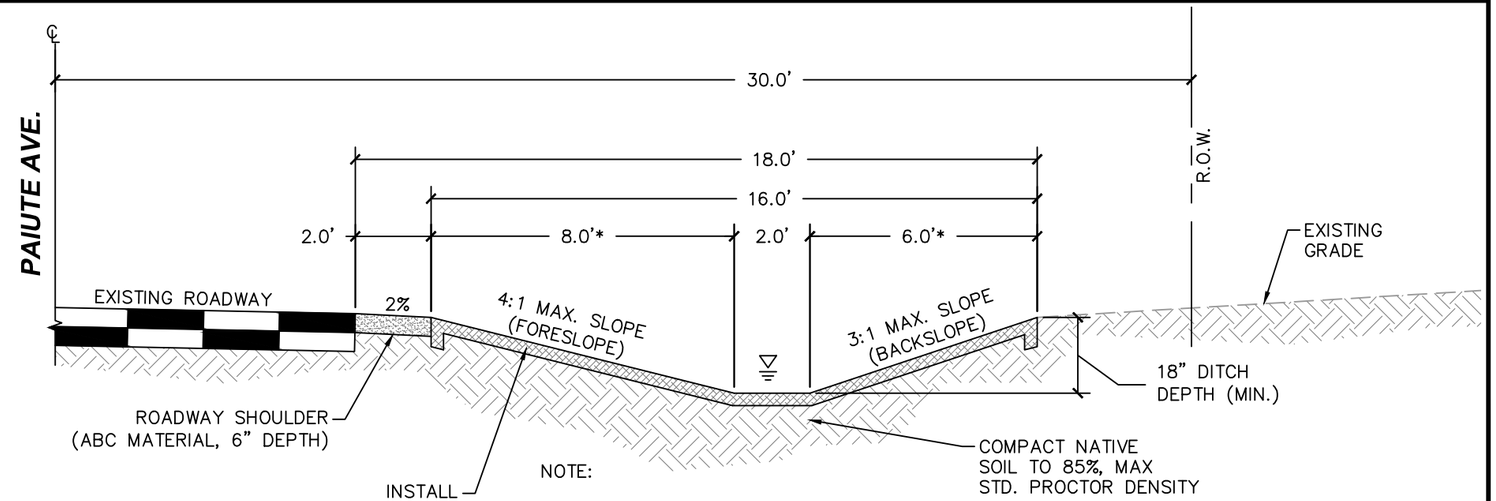

NOTE:

* ADJUST DIMENSIONS TO FIT FIELD CONDITIONS AND MAINTAIN DITCH SIDE SLOPES AS SHOWN.

▽ = MAXIMUM WATER SURFACE ELEVATION FOR 5 YEAR STORM (DEPTH=8")

ROADSIDE DITCH - PAIUTE AVE.

(LOOKING SOUTH)
SCALE: 1"=4'

N

0 20 40

HORIZONTAL SCALE: 1"=20'

FOR CONSTRUCTION

CALL UTILITY NOTIFICATION CENTER OF COLORADO
811
CALL 2-BUSINESS DAYS IN ADVANCE BEFORE YOU DIG, GRADE, OR EXCAVATE FOR THE MARKING OF UNDERGROUND MEMBER UTILITIES

REVISIONS:	NO.	DATE	REVISION DESCRIPTION:

BOULDER COUNTY PUBLIC WORKS
ENGINEERING DIVISION

DESIGNED:	CAD/C3D:	CHECKED:	DATE:
RL	RL	DW	07/30/2021

MORTON HEIGHTS-2021

PAIUTE-NIWOT STORM (3)

PROJECT NO: **RS-MOR-001** SHEET NO: **50**

C:\AUTOCAD\PROJECTS\MORTON HEIGHTS\PLAN SET\MORTON-HEIGHTS-PAIUTE-MORTON STORM EAST 24 FEB 2020.DWG LAST PLOTTED 7/30/2021 12:26 PM

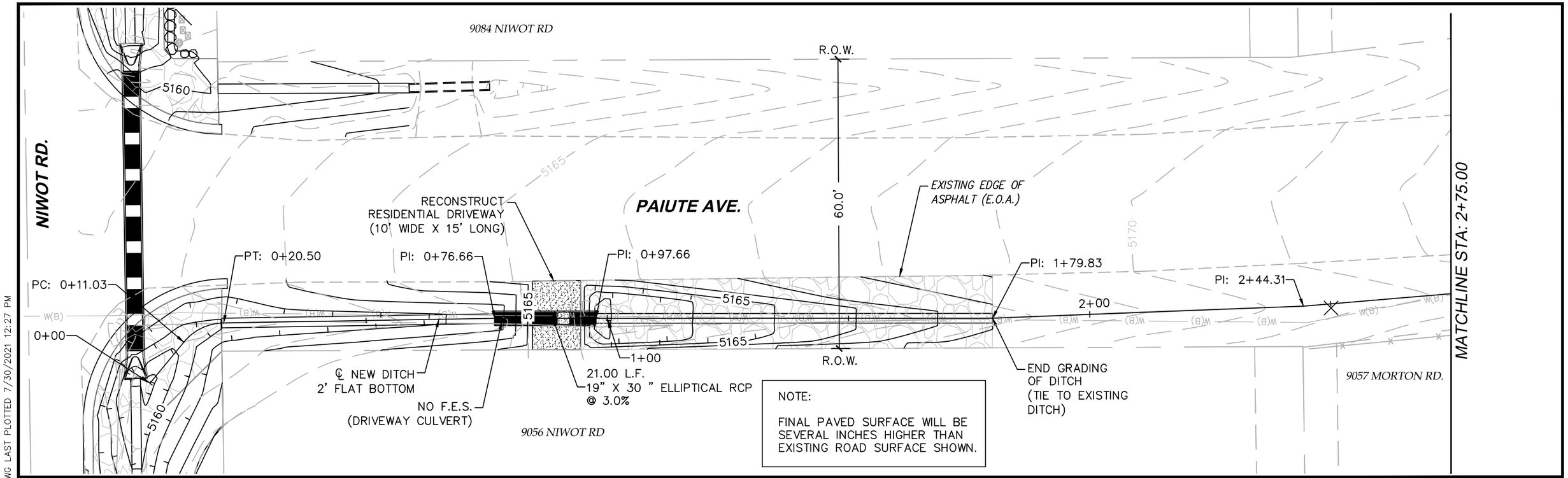

NOTE:

FINAL PAVED SURFACE WILL BE SEVERAL INCHES HIGHER THAN EXISTING ROAD SURFACE SHOWN.

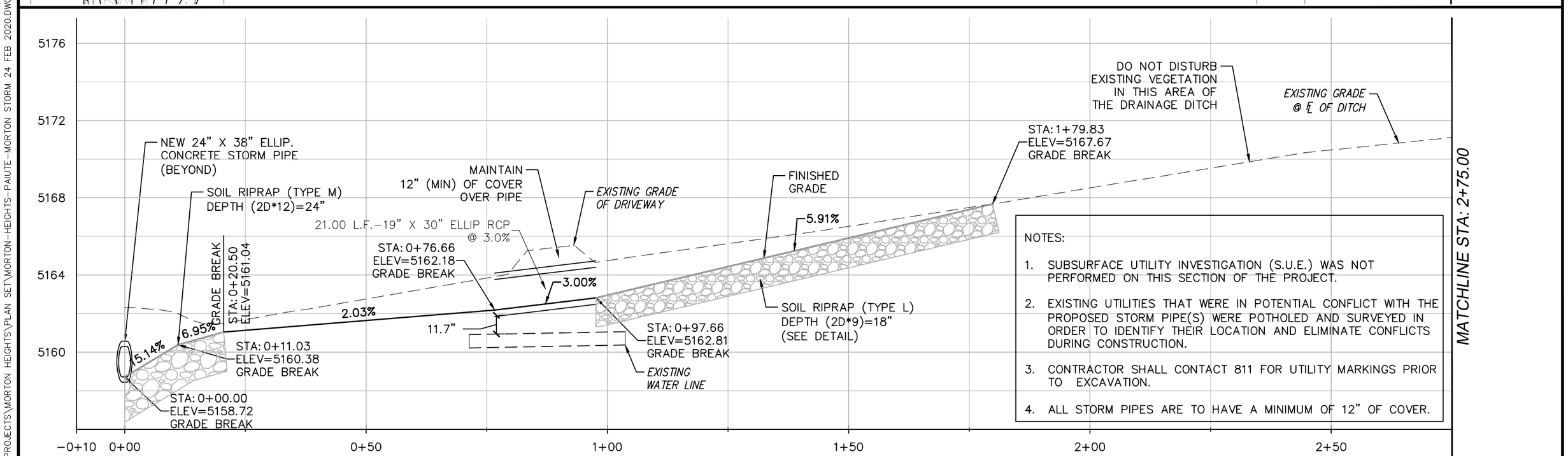

NOTES:

1. SUBSURFACE UTILITY INVESTIGATION (S.U.E.) WAS NOT PERFORMED ON THIS SECTION OF THE PROJECT.
2. EXISTING UTILITIES THAT WERE IN POTENTIAL CONFLICT WITH THE PROPOSED STORM PIPE(S) WERE POTHOLED AND SURVEYED IN ORDER TO IDENTIFY THEIR LOCATION AND ELIMINATE CONFLICTS DURING CONSTRUCTION.
3. CONTRACTOR SHALL CONTACT 811 FOR UTILITY MARKINGS PRIOR TO EXCAVATION.
4. ALL STORM PIPES ARE TO HAVE A MINIMUM OF 12" OF COVER.

0 20 40

HORIZONTAL SCALE: 1"=20'

N

FOR CONSTRUCTION

CALL UTILITY NOTIFICATION CENTER OF COLORADO

811

CALL 2-BUSINESS DAYS IN ADVANCE BEFORE YOU DIG, GRADE, OR EXCAVATE FOR THE MARKING OF UNDERGROUND MEMBER UTILITIES

REVISIONS:	NO.	DATE	REVISION DESCRIPTION:

BOULDER COUNTY PUBLIC WORKS
ENGINEERING DIVISION

DESIGNED:	CAD/C3D:	CHECKED:	DATE:
RL	RL	DW	07/30/2021

MORTON HEIGHTS-2021

PAIUTE-MORTON STORM (1)

PROJECT NO: **RS-MOR-001** SHEET NO: **51**

C:\AUTOCAD\PROJECTS\MORTON HEIGHTS\PLAN SET\MORTON-HEIGHTS-PAIUTE-MORTON STORM 24 FEB 2020.DWG LAST PLOTTED 7/30/2021 12:27 PM

MATCHLINE STA: 2+75.00

6928 PAIUTE RD

R.O.W.

60.0'

PAIUTE AVE.

RECONSTRUCT RESIDENTIAL DRIVEWAY (10' WIDE X 15' LONG)

EXISTING EDGE OF ASPHALT (EOA)

PI: 3+07.01

3+00

BEGIN GRADING OF DITCH (TIE TO EXISTING DITCH)

℄ NEW DITCH 2' FLAT BOTTOM

R.O.W.

NO F.E.S. (DRIVEWAY CULVERT)

PI: 3+81.85

PI: 4+02.85

4+00

21.00 L.F. 19" X 30 " ELLIPTICAL RCP @ 3.0%

5175

5180

PI: 4+43.61

PI: 4+66.46

PI: 4+74.46

R15.0'

CONSTRUCT NEW 15' RADIUS CORNER

SOIL RIPRAP TYPE L (9") 212 SQ. FT.

EXISTING WATER VALVE (TOP OF VALVE=5179.74

19" X 30" F.E.S. (BOTH ENDS)

5+00

35.00 L.F. 19" X 30 ELLIPTICAL RCP @ 2.5%

22.0'

2.0'

MORTON RD.

60.0'

R.O.W.

CONSTRUCT NEW 15' RADIUS CORNER

PI: 5+21.08

PI: 5+29.09

2' WIDE ABC SAFETY SHOULDER (TYPICAL BOTH CORNERS)

5+39

REMOVE AND REPLACE EXISTING RIVER ROCK INSTALL GEOTEXTILE MATERIAL PRIOR TO RESETTING ROCK (174 SQ. FT.)

9072 MORTON RD.

9057 MORTON RD.

NOTE:

FINAL PAVED SURFACE WILL BE SEVERAL INCHES HIGHER THAN EXISTING ROAD SURFACE SHOWN.

MATCHLINE STA: 2+75.00

MORTON RD

22.0'

FINISHED GRADE (W/ OVERLAY 2.5" NET RISE)

EXISTING GRADE

STA: 5+12.66 ELEV: 5182.07

19"X30" ELLIPTICAL F.E.S. (TYP.BOTH ENDS)

13.62%

-21.58%

STA: 5+39.01 ELEV=5180.66 GRADE BREAK

MAINTAIN 12" (MIN) OF COVER OVER PIPE

STA: 4+74.46 ELEV=5178.23 GRADE BREAK

2.50%

2.50% 10.75%

STA: 5+29.09 ELEV=5179.60 GRADE BREAK

EXISTING GRADE OF DRIVEWAY

21.00 L.F.-19" X 30" ELLIP RCP @ 3.0%

STA: 4+02.85 ELEV=5174.46 GRADE BREAK

5.62%

13.2"

19.5"

STA: 5+21.08 ELEV=5179.40 GRADE BREAK

STA: 3+07.01 ELEV=5172.33 GRADE BREAK

FINISHED GRADE

2.00%

EXISTING GRADE

STA: 4+66.46 ELEV=5178.03 GRADE BREAK

EXISTING NATURAL GAS LINE

EXISTING WATER LINE

SOIL RIPRAP (TYPE L) DEPTH (2D*9)=18" (SEE DETAIL)

3.00%

SOIL RIPRAP (TYPE L) DEPTH (2D*9)=18" (SEE DETAIL)

STA: 3+81.85 ELEV=5173.83 GRADE BREAK

EXISTING PHONE LINE

EXISTING WATER LINE

DO NOT DISTURB EXISTING VEGETATION IN THIS AREA OF THE DRAINAGE DITCH

35.00 L.F.-19" X 30" ELLIP RCP @ 2.5%

5184 5180 5176 5172 5168

3+00 3+50 4+00 4+50 5+00 5+50 5+75

0 20 40

HORIZONTAL SCALE: 1"=20'

N

FOR CONSTRUCTION

CALL UTILITY NOTIFICATION CENTER OF COLORADO

811

CALL 2-BUSINESS DAYS IN ADVANCE BEFORE YOU DIG, GRADE, OR EXCAVATE FOR THE MARKING OF UNDERGROUND MEMBER UTILITIES

REVISIONS:	NO.	DATE	REVISION DESCRIPTION:

BOULDER COUNTY PUBLIC WORKS
ENGINEERING DIVISION

DESIGNED:	CAD/C3D:	CHECKED:	DATE:
RL	RL	DW	07/30/2021

MORTON HEIGHTS-2021

PAIUTE-MORTON STORM (2)

PROJECT NO: **RS-MOR-001** SHEET NO: **52**

C:\AUTOCAD\PROJECTS\MORTON HEIGHTS\PLAN SET\MORTON-HEIGHTS-PAIUTE-MORTON STORM 24 FEB 2020.DWG LAST PLOTTED 7/30/2021 12:27 PM

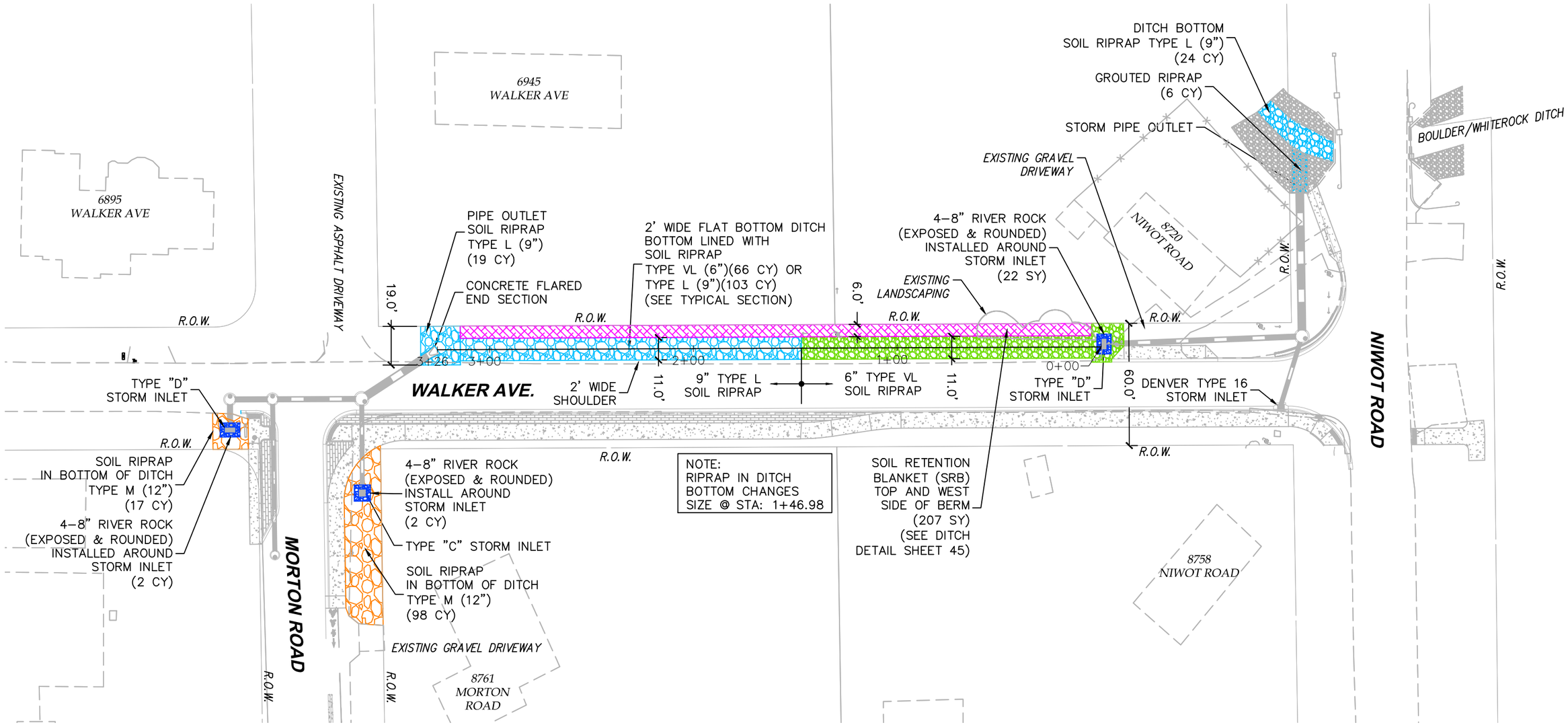

LEGEND:

- SOIL RIPRAP TYPE VL – 6"
- SOIL RIPRAP TYPE L – 9"
- SOIL RIPRAP TYPE M – 12"
- 4–8" ROUNDED RIVER ROCK INLET SURROUND (DRY RUBBLE S AND D PAVE)
- SOIL RETENTION BLANKET (STRAW/COCONUT) (BIODEGRADABLE CLASS 1) TOPSOIL (COMPLETE IN PLACE) SEEDING (NATIVE MIX)

NOTES:

1. SOIL RETENTION BLANKETS SHALL BE APPROVED PHOTODEGRADABLE OR BIODEGRADABLE.
2. INSTALL SOIL RETENTION BLANKETS PER CDOT STANDARD DETAIL M–216–1.
3. EXCAVATE 2X THE MEAN RIPRAP DIAMETER PRIOR TO PLACEMENT (EXAMPLE: TYPE L (9") RIPRAP REQUIRES 18" DEEP EXCAVATION)
4. HAND BROADCAST NATIVE SEED MIX AND TOPSOIL ON TOP OF FINAL DITCH RIPRAP LAYER. SEE DETAIL S2, SHEET 66.

N

0 50 100

HORIZONTAL SCALE: 1"=50'

FOR CONSTRUCTION

CALL UTILITY NOTIFICATION CENTER OF COLORADO
811
CALL 2–BUSINESS DAYS IN ADVANCE BEFORE YOU DIG, GRADE, OR EXCAVATE FOR THE MARKING OF UNDERGROUND MEMBER UTILITIES

REVISIONS:	NO.	DATE	REVISION DESCRIPTION:

BOULDER COUNTY PUBLIC WORKS
ENGINEERING DIVISION

DESIGNED:	CAD/C3D:	CHECKED:	DATE:
RL	RL	DW	07/30/2021

MORTON HEIGHTS–2021

RIPRAP SIZES AND LOCATIONS (1)

PROJECT NO: RS-MOR-001 SHEET NO: 53

C:\AUTOCAD\PROJECTS\MORTON HEIGHTS\PLAN SET\MORTON-HEIGHTS-RIPRAP 28 FEB 2020.DWG LAST PLOTTED 7/30/2021 12:28 PM

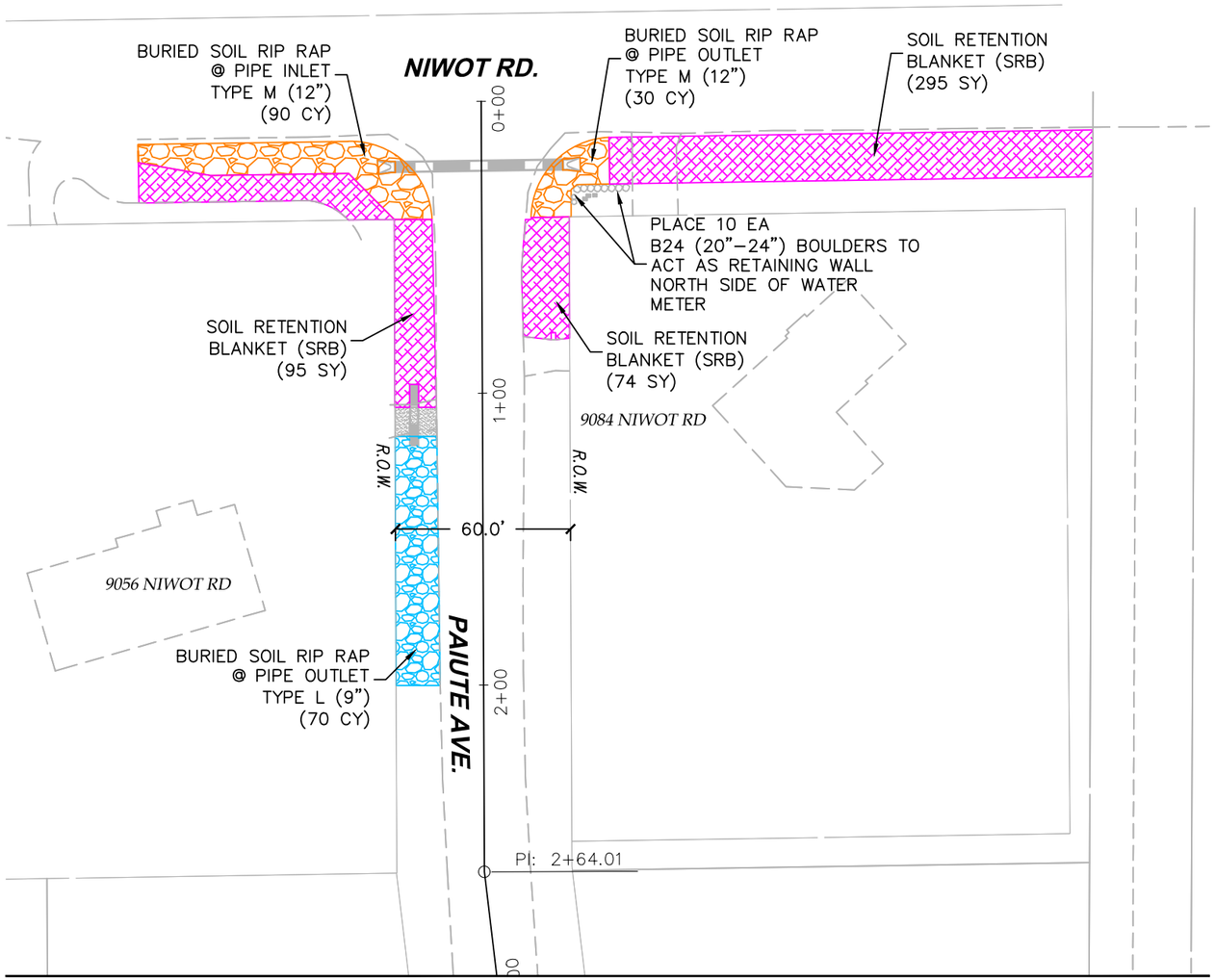

MATCHLINE STA: 3+00.00 (UPPER RIGHT)

PAIUTE AVE & NIWOT RD.

MATCHLINE STA: 3+00.00 (LOWER LEFT)

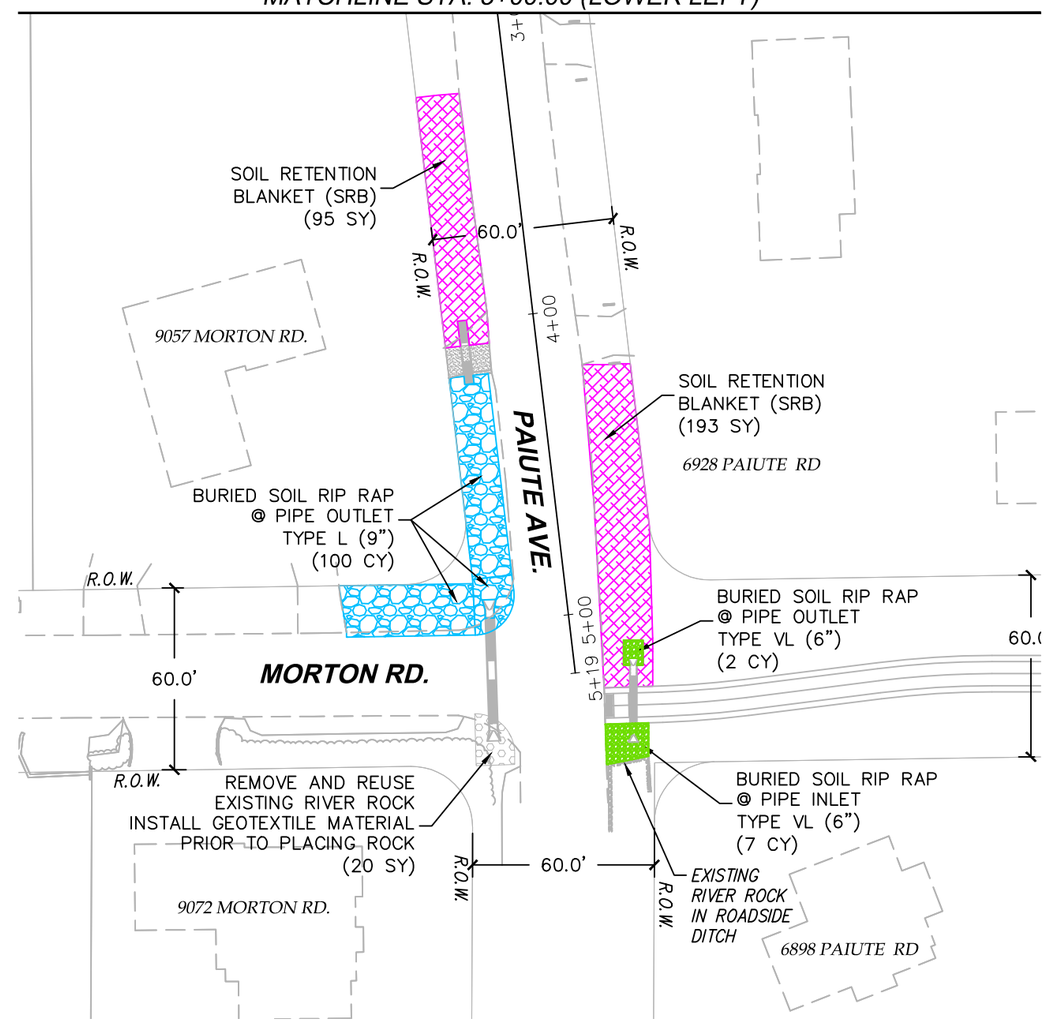

PAIUTE AVE & MORTON RD.

LEGEND:

- SOIL RIPRAP TYPE VL – 6"
- SOIL RIPRAP TYPE L – 9"
- SOIL RIPRAP TYPE M – 12"
- 4–8" ROUNDED RIVER ROCK INLET SURROUND (DRY RUBBLE S AND D PAVE)
- SOIL RETENTION BLANKET (STRAW/COCONUT) (BIODEGRADABLE CLASS 1) TOPSOIL (COMPLETE IN PLACE) SEEDING (NATIVE MIX)

0 50 100
HORIZONTAL SCALE: 1"=50'

N

FOR CONSTRUCTION

CALL UTILITY NOTIFICATION CENTER OF COLORADO
811
CALL 2–BUSINESS DAYS IN ADVANCE BEFORE YOU DIG, GRADE, OR EXCAVATE FOR THE MARKING OF UNDERGROUND MEMBER UTILITIES

REVISIONS: NO.	DATE	REVISION DESCRIPTION:

Boulder County

BOULDER COUNTY PUBLIC WORKS
ENGINEERING DIVISION

DESIGNED:	CAD/C3D:	CHECKED:	DATE:
RL	RL	DW	07/30/2021

MORTON HEIGHTS–2021

RIPRAP SIZES AND LOCATIONS (2)

PROJECT NO: **RS-MOR-001** SHEET NO: **54**

C:\AUTOCAD\PROJECTS\MORTON HEIGHTS\PLAN SET\MORTON-HEIGHTS-RIPRAP 28 FEB 2020.DWG LAST PLOTTED 7/30/2021 12:28 PM

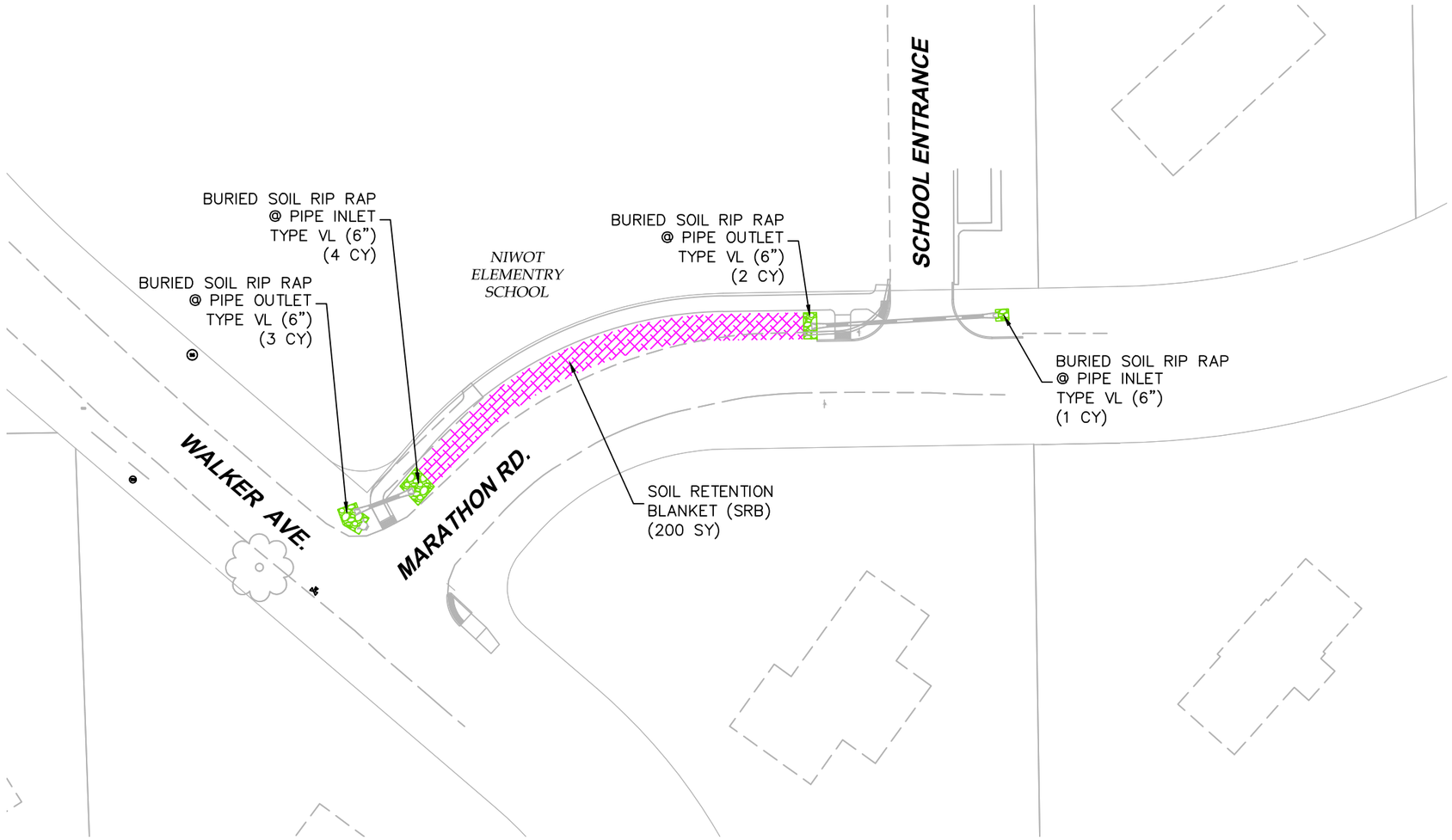

MARATHON RD. & WALKER AVE.

LEGEND:

- SOIL RIPRAP TYPE VL – 6"
- SOIL RIPRAP TYPE L – 9"
- SOIL RIPRAP TYPE M – 12"
- 4–8" ROUNDED RIVER ROCK INLET SURROUND (DRY RUBBLE S AND D PAVE)
- SOIL RETENTION BLANKET (STRAW/COCONUT) (BIODEGRADABLE CLASS 1) TOPSOIL (COMPLETE IN PLACE) SEEDING (NATIVE MIX)

0 50 100
HORIZONTAL SCALE: 1"=50'

N

FOR CONSTRUCTION

CALL UTILITY NOTIFICATION CENTER OF COLORADO
811
CALL 2–BUSINESS DAYS IN ADVANCE BEFORE YOU DIG, GRADE, OR EXCAVATE FOR THE MARKING OF UNDERGROUND MEMBER UTILITIES

REVISIONS:	NO.	DATE	REVISION DESCRIPTION:

BOULDER COUNTY PUBLIC WORKS
ENGINEERING DIVISION

DESIGNED:	CAD/C3D:	CHECKED:	DATE:
RL	RL	DW	07/30/2021

MORTON HEIGHTS–2021

RIPRAP SIZES AND LOCATIONS (3)

PROJECT NO: **RS-MOR-001** SHEET NO: **55**

C:\AUTOCAD\PROJECTS\MORTON HEIGHTS\PLAN SET\MORTON-HEIGHTS-RIPRAP 28 FEB 2020.DWG LAST PLOTTED 7/30/2021 12:29 PM

Native Seed Mixes

Samples for Boulder County.

Plains Seed Mix

Below 5,500 Feet Elevation

Common Name	Species Name	Variety	% of Mix	#PLS/ Acre
Side Oats Grama	*Bouteloua curtipendula*	Vaughn	15%	2.74
Blue Grama	*Bouteloua gracilis*	Native, Alma, or Hachita	20%	0.84
Buffalograss	*Buchloe dactyloides*	Native	15%	9.33
Western Wheatgrass	*Pascopyrum smithii*	Arriba	12.5%	3.96
Western Wheatgrass	*Pascopyrum smithii*	Native	12.5%	3.96
Little Bluestem	*Schizachyrium scoparium*	Cimarron or Pastura	13%	1.74
Green Needlegrass	*Stipa viridula*	Lodorm or Native	12%	2.31
		Totals:	100%	24.88

Foothills Seed Mix

5,500 Feet to 7,000 Feet Elevation

Common Name	Species Name	Variety	% of Mix	#PLS/ Acre
Side Oats Grama	*Bouteloua curtipendula*	Vaughn	10%	1.82
Blue Grama	*Bouteloua gracilis*	Native, Alma, or Hachita	15%	0.63
Slender Wheatgrass	*Elymus trachycaulus*	San Luis	20%	4.38
Junegrass	*Koeleria macrantha*	Native	10%	0.15
Western Wheatgrass	*Pascopyrum smithii*	Arriba	10%	3.17
Western Wheatgrass	*Pascopyrum smithii*	Native	10%	3.17
Switchgrass	*Panicum virgatum*	Blackwell or Nebraska 28	7%	0.63
Little Bluestem	*Schizachyrium scoparium*	Cimarron or Pastura	8%	1.07
Green Needlegrass	*Stipa viridula*	Lodorm or Native	10%	1.93
		Totals:	100%	16.95

Mountain Seed Mix

7,000 Feet and Above Elevation

Common Name	Species Name	Variety	% of Mix	#PLS/ Acre
Blue Grama	*Bouteloua gracilis*	Native, Alma, or Hachita	20%	0.84
Canada Wildrye	*Elymus canadensis*	Native	10%	3.03
Thickspike Wheatgrass	*Elymus lanceolatus*	Critana	25%	5.58
Slender Wheatgrass	*Elymus trachycaulus*	San Luis	25%	5.48
Junegrass	*Koeleria macrantha*	Native	10%	0.15
Sandberg's Bluegrass	*Poa secunda*	Native	10%	0.38
		Totals:	100%	15.46

Rates are for broadcast seeding. If using a seed drill, reduce rates by half.
PLS = Pure Live Seed.

RETAIL VENDORS OF NATIVE SEED FOR BOULDER COUNTY:

ARKANSAS VALLEY SEED
4333 HWY. 66
LONGMONT, CO 80504
(877) 907–3337
WWW.AVSEEDS.COM

PAWNEE BUTTES SEED
605 25TH ST.
GREELEY, CO 80632
(800) 782–5947
WWW.PAWNEEBUTTESSEED.COM

WESTERN NATIVE SEED
P.O. BOX 188
COALDALE, CO 81222
(719) 942–3935
WWW.WESTERNNATIVESEED.COM

RIPRAP DESIGNATION	% SMALLER THAN GIVEN SIZE BY WEIGHT	INTERMEDIATE ROCK DIMENSION (INCHES)	D_{50}* (INCHES)
TYPE VL	70 - 100 50 - 70 35 - 50 2 - 10	12 9 6 2	6
TYPE L	70 - 100 50 - 70 35 - 50 2 - 10	15 12 9 3	9
TYPE M	70 - 100 50 - 70 35 - 50 2 - 10	21 18 12 4	12
TYPE H	70 - 100 50 - 70 35 - 50 2 - 10	30 24 18 6	18

*D_{50} = MEAN ROCK SIZE

RIPRAP NOTES:

1. THERE ARE THREE TYPES OF RIPRAP MATERIAL FOUND IN THIS PROJECT:

   "RIPRAP" – CONSISTS OF A WEED BLOCKING GEOTEXTILE, LAID UNDER EXPOSED RIPRAP MATERIAL.

   "SOIL RIPRAP" – RIPRAP PRE–MIXED WITH NATIVE SOIL. SEE PLACEMENT NOTES BELOW.

   "GROUTED RIPRAP" – RIPRAP WITH GROUT PLACED UNDER AND AROUND TO HOLD IT IN PLACE AND PREVENT EROSION OF THE MATERIAL UNDERNEATH.

2. SOIL RIPRAP PLACEMENT:

   SOURCE: MILE HIGH FLOOD DISTRICT SPECIFICATIONS

   SECTION 31 37 00 SUBSECTION 3.02 (REVISED 10/2017)

   A. ADJACENT STOCKPILES OF RIPRAP AND SOIL SHALL BE CREATED AND MIXING DONE AT THE STOCKPILE LOCATION, NOT AT THE LOCATION WHERE SOIL RIPRAP IS TO BE PLACED.

   B. MIX THIRTY–FIVE PERCENT (35%) SOIL BY VOLUME WITH STOCKPILED RIPRAP, USING ADDITIONAL MOISTURE AND CONTROL PROCEDURES THAT ENSURE A HOMOGENOUS MIXTURE; WHERE THE SOIL FILLS THE INHERENT VOIDS IN THE RIPRAP WITHOUT DISPLACING RIPRAP.

   C. WITH PRIOR APPROVAL OF ENGINEER, LAYERING THE RIPRAP AND SOIL INSTEAD OF PREMIXING MAY BE ALLOWED IF THE NATIVE SOIL IS GRANULAR.

   D. PLACE A FIRST LAYER OF SMALLER SOIL RIPRAP OF APPROXIMATE D50 THICKNESS. THEN PLACE THE TOP LAYER WITH SURFACE ROCKS THAT ARE LARGELY D50 OR GREATER, FILLING VOIDS AS NECESSARY WITH SMALLER PLANTED RIPRAP. CREATE A SMOOTH PLANES ON THE DITCH SIDES & BOTTOM.

   E. THE MIXTURE SHALL BE CONSOLIDATED BY LARGE VIBRATORY EQUIPMENT OR BACKHOE BUCKET TO CREATE A TIGHT, DENSE INTERLOCKING MASS.

   F. THE SOIL SHALL BE FURTHER WETTED TO ENCOURAGE VOID FILLING WITH SOIL.

   G. ANY LARGE VOIDS SHALL BE FILLED WITH ROCK AND SMALL VOIDS FILLED WITH SOIL.

   H. EXCESSIVELY THICK ZONES OF SOIL PRONE TO WASHING AWAY SHALL NOT BE CREATED (FOR EXAMPLE, NO THICKNESSES GREATER THAN SIX (6) INCHES).

   I. FOR BURIED SOIL RIPRAP, THE TOP SURFACE SHALL BE COVERED WITH FOUR (4) INCHES OF TOPSOIL SUCH THAT NO ROCK POINTS ARE PROTRUDING.

   J. THE FINAL SURFACE SHALL BE THOROUGHLY WETTED FOR GOOD COMPACTION, SMOOTHED AND COMPACTED BY VIBRATING EQUIPMENT; THE SURFACE SHALL THEN BE HAND RAKED TO RECEIVE PLANTING OR SEEDING.

S4 **RIPRAP NOTES & DESIGNATIONS**
SCALE: 1"=5'

FOR CONSTRUCTION

CALL UTILITY NOTIFICATION CENTER OF COLORADO
811
CALL 2–BUSINESS DAYS IN ADVANCE BEFORE YOU DIG, GRADE, OR EXCAVATE FOR THE MARKING OF UNDERGROUND MEMBER UTILITIES

REVISIONS: NO.	DATE	REVISION DESCRIPTION:

BOULDER COUNTY PUBLIC WORKS
ENGINEERING DIVISION

DESIGNED:	CAD/C3D:	CHECKED:	DATE:
RL	RL	DW	07/30/2021

MORTON HEIGHTS–2021
RIPRAP AND SEEDING NOTES
PROJECT NO: RS-MOR-001 SHEET NO: 56

LEGEND:

MAINLINE TRACER WIRE:

OPEN TRENCH INSTALLATION
#14 AWG HDPE INSULATED COPPER
WIRE COLOR COATED GREEN (TYP)

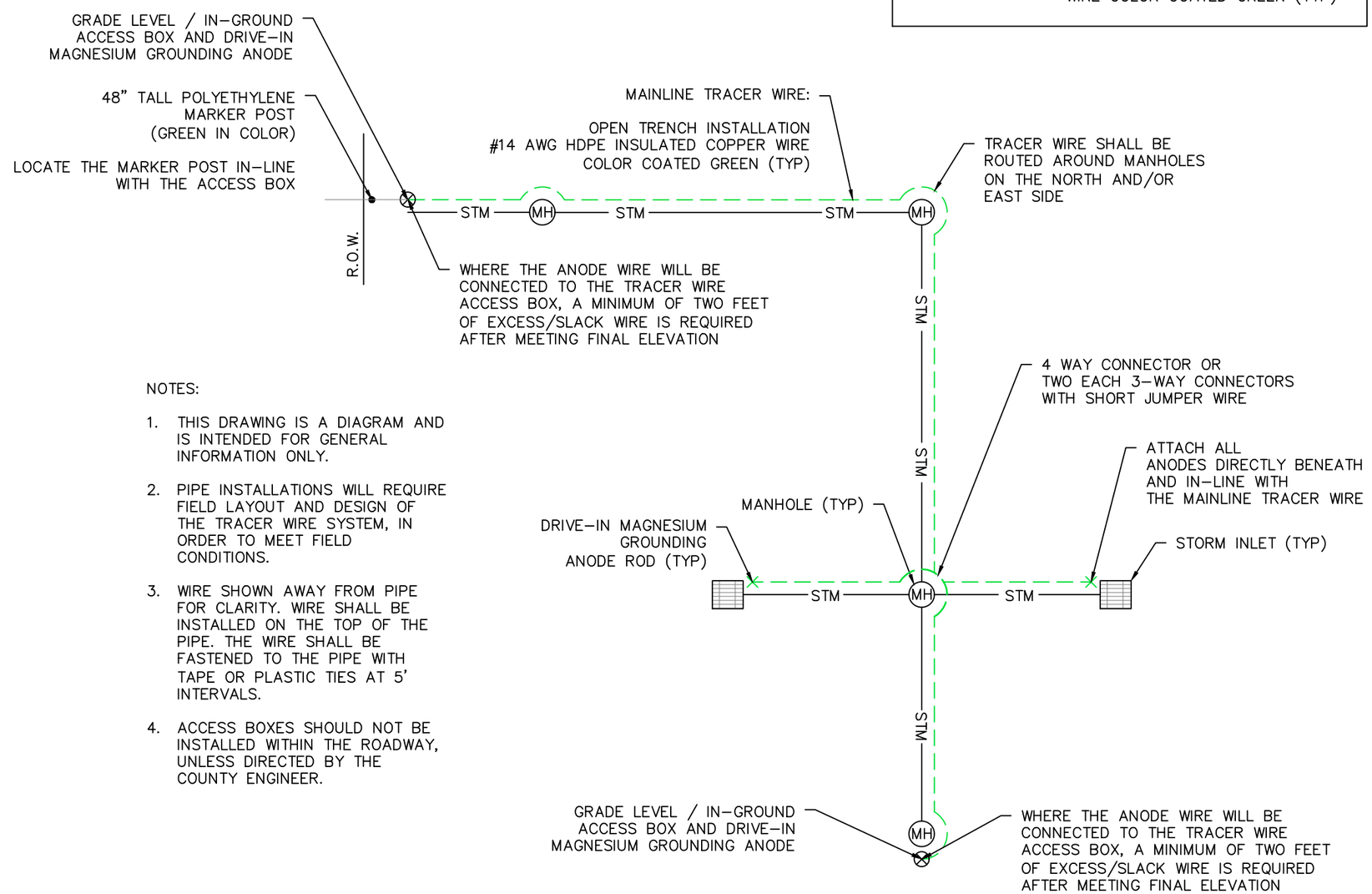

NOTES:

1. THIS DRAWING IS A DIAGRAM AND IS INTENDED FOR GENERAL INFORMATION ONLY.
2. PIPE INSTALLATIONS WILL REQUIRE FIELD LAYOUT AND DESIGN OF THE TRACER WIRE SYSTEM, IN ORDER TO MEET FIELD CONDITIONS.
3. WIRE SHOWN AWAY FROM PIPE FOR CLARITY. WIRE SHALL BE INSTALLED ON THE TOP OF THE PIPE. THE WIRE SHALL BE FASTENED TO THE PIPE WITH TAPE OR PLASTIC TIES AT 5' INTERVALS.
4. ACCESS BOXES SHOULD NOT BE INSTALLED WITHIN THE ROADWAY, UNLESS DIRECTED BY THE COUNTY ENGINEER.

TRACER WIRE SCHEMATIC

NOT TO SCALE

FOR CONSTRUCTION

CALL UTILITY NOTIFICATION CENTER OF COLORADO
811
CALL 2-BUSINESS DAYS IN ADVANCE BEFORE YOU DIG, GRADE, OR EXCAVATE FOR THE MARKING OF UNDERGROUND MEMBER UTILITIES

REVISIONS: NO.	DATE	REVISION DESCRIPTION:

BOULDER COUNTY PUBLIC WORKS
ENGINEERING DIVISION

DESIGNED:	CAD/C3D:	CHECKED:	DATE:
RL	RL	DW	07/30/2021

MORTON HEIGHTS-2021

STORM DRAIN TRACER WIRE SCHEMATIC

PROJECT NO: RS-MOR-001 SHEET NO: 57

C:\AUTOCAD\PROJECTS\MORTON HEIGHTS\PLAN SET\MORTON-HEIGHTS-TRACER-WIRE 11 MAR 2019.DWG LAST PLOTTED 7/30/2021 12:29 PM

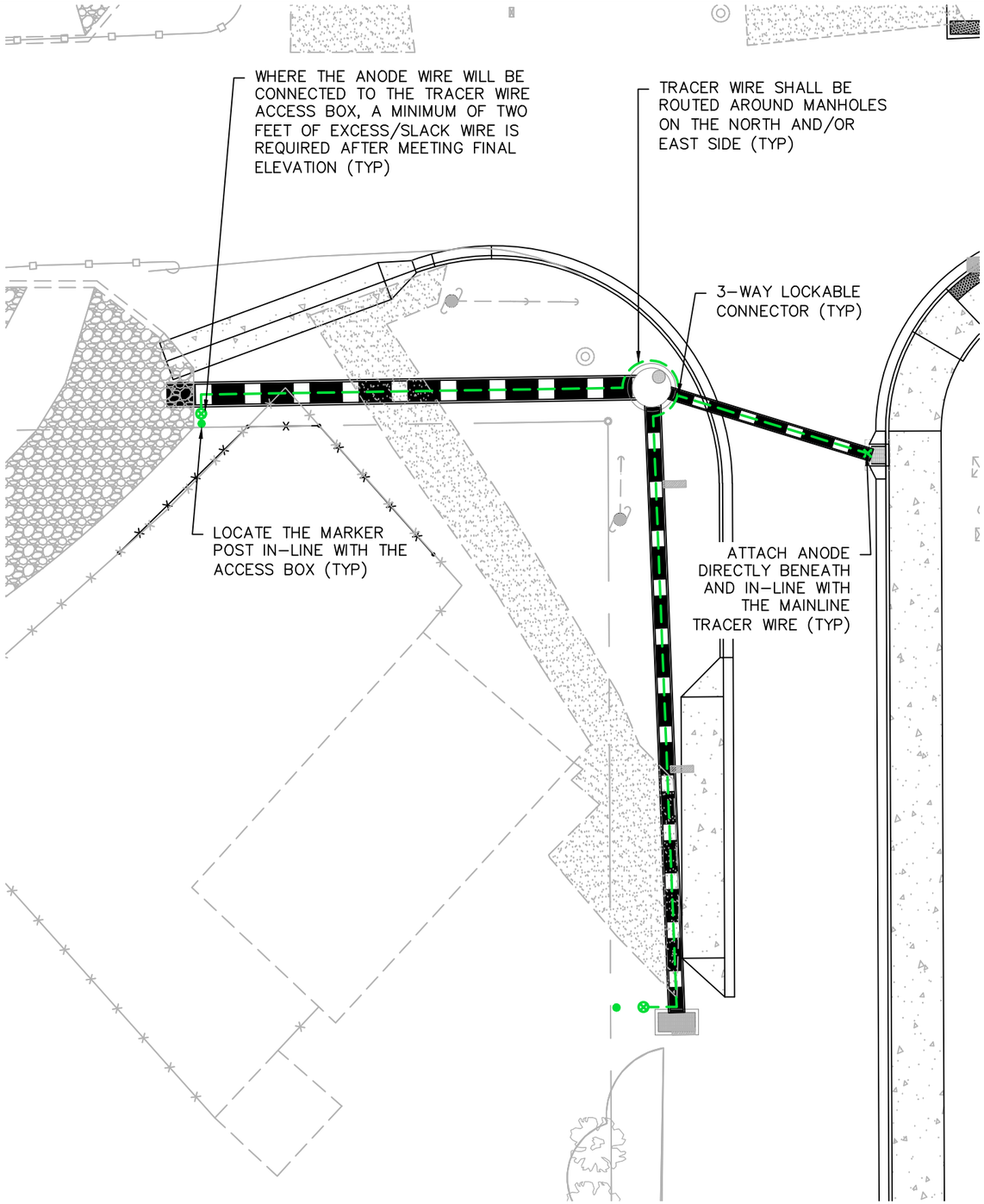

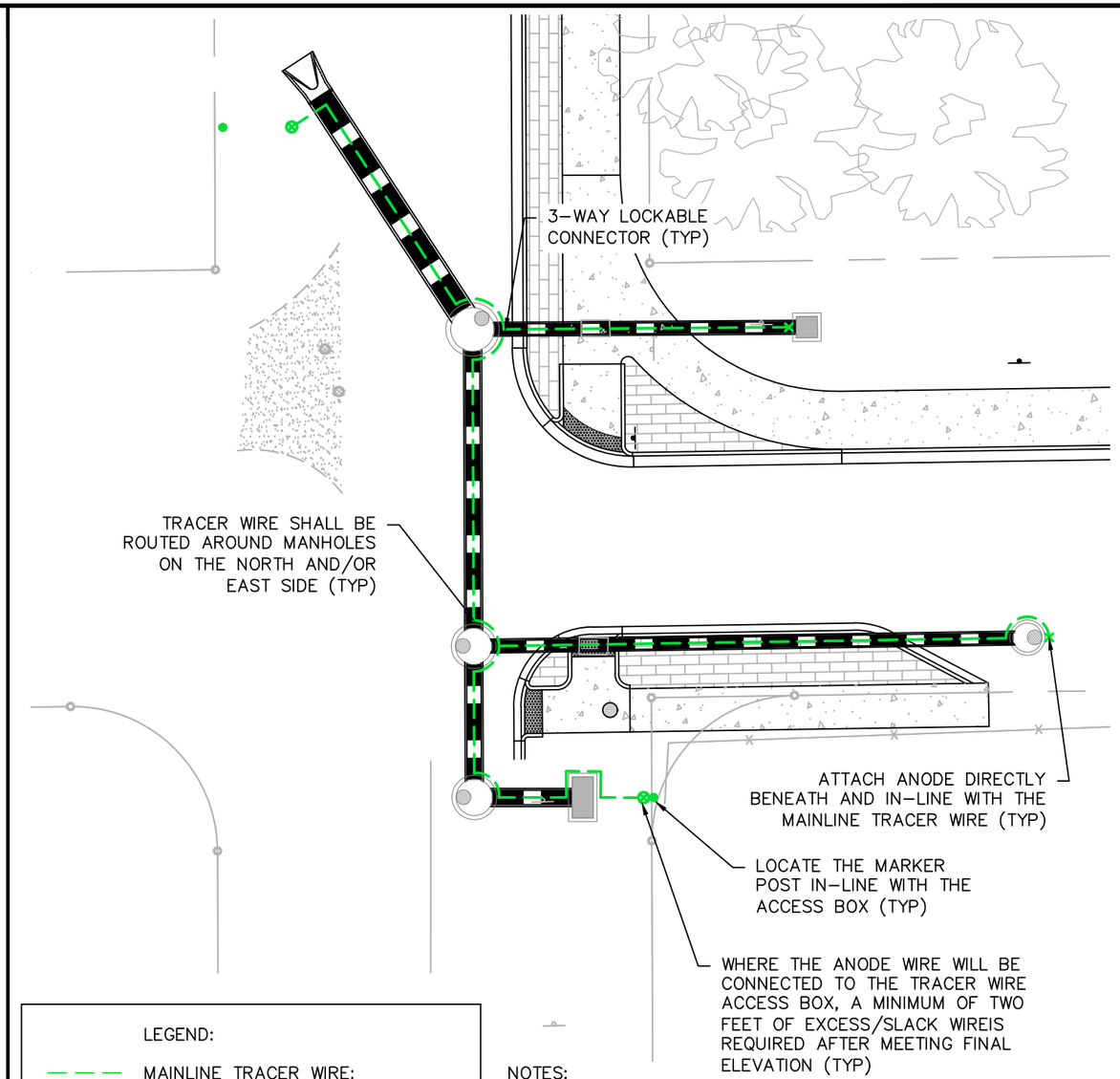

LEGEND:

- MAINLINE TRACER WIRE: OPEN TRENCH INSTALLATION #14 WAG HDPE INSULATED COPPER WIRE COLOR COATED GREEN (TYP)
- GRADE LEVEL/IN-GROUND ACCESS BOX AND DRIVE-IN MAGNESIUM GROUNDING ANODE
- 48" TALL POLYETHYLENE MARKER POST (GREEN IN COLOR)
- DRIVE-IN MAGNESIUM GROUNDING ANODE ROD

NOTES:

1. THIS DRAWING IS A DIAGRAM AND IS INTENDED FOR GENERAL INFORMATION ONLY.
2. PIPE INSTALLATIONS WILL REQUIRE FIELD LAYOUT AND DESIGN OF THE TRACER WIRE SYSTEM, IN ORDER TO MEET FIELD CONDITIONS.
3. WIRE SHALL BE INSTALLED ON THE TOP OF THE PIPE. THE WIRE SHALL BE FASTENED TO THE PIPE WITH TAPE OR PLASTIC TIES AT 5' INTERVALS.
4. ACCESS BOXES SHOULD NOT BE INSTALLED WITHIN THE ROADWAY, UNLESS DIRECTED BY THE COUNTY ENGINEER.

0 20 40

HORIZONTAL SCALE: 1"=20'

N

FOR CONSTRUCTION

CALL UTILITY NOTIFICATION CENTER OF COLORADO

811

CALL 2-BUSINESS DAYS IN ADVANCE BEFORE YOU DIG, GRADE, OR EXCAVATE FOR THE MARKING OF UNDERGROUND MEMBER UTILITIES

REVISIONS:	NO.	DATE	REVISION DESCRIPTION:

BOULDER COUNTY PUBLIC WORKS
ENGINEERING DIVISION

DESIGNED:	CAD/C3D:	CHECKED:	DATE:
RL	RL	DW	07/30/2021

MORTON HEIGHTS-2021

STORM DRAIN TRACER WIRE LAYOUT

PROJECT NO: **RS-MOR-001** SHEET NO: **58**

C:\AUTOCAD\PROJECTS\MORTON HEIGHTS\PLAN SET\MORTON-HEIGHTS-TRACER-WIRE 11 MAR 2019.DWG LAST PLOTTED 7/30/2021 12:30 PM

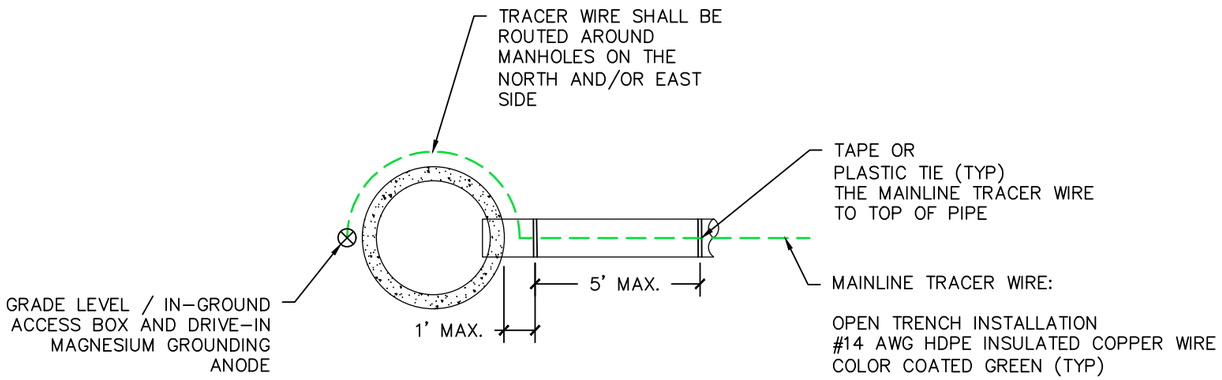

STORM SEWER (PLAN VIEW)

NOT TO SCALE

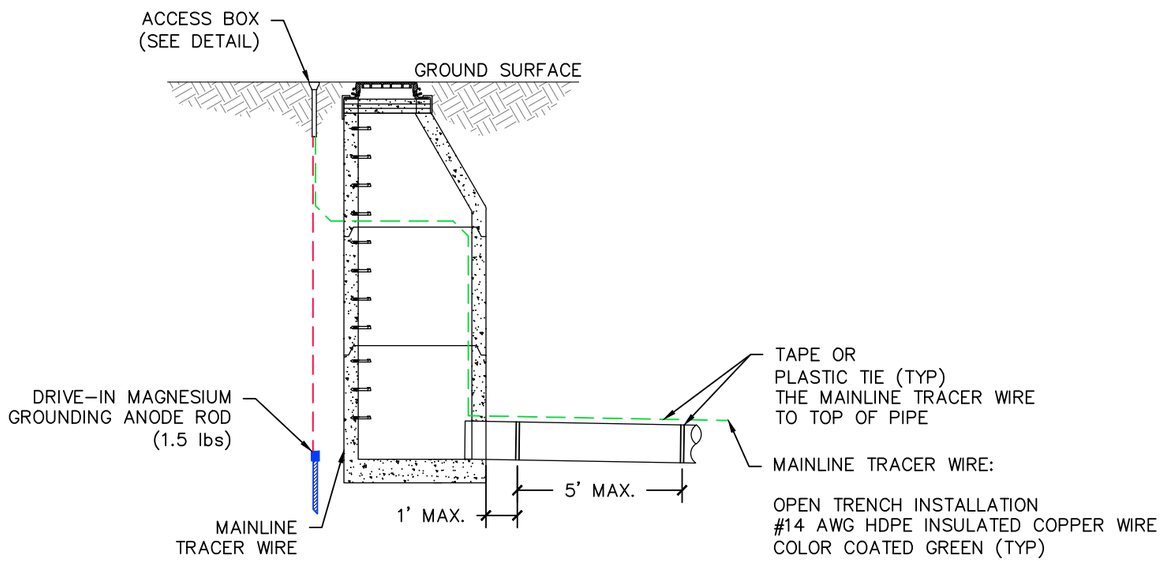

STORM SEWER (SECTION VIEW)

NOT TO SCALE

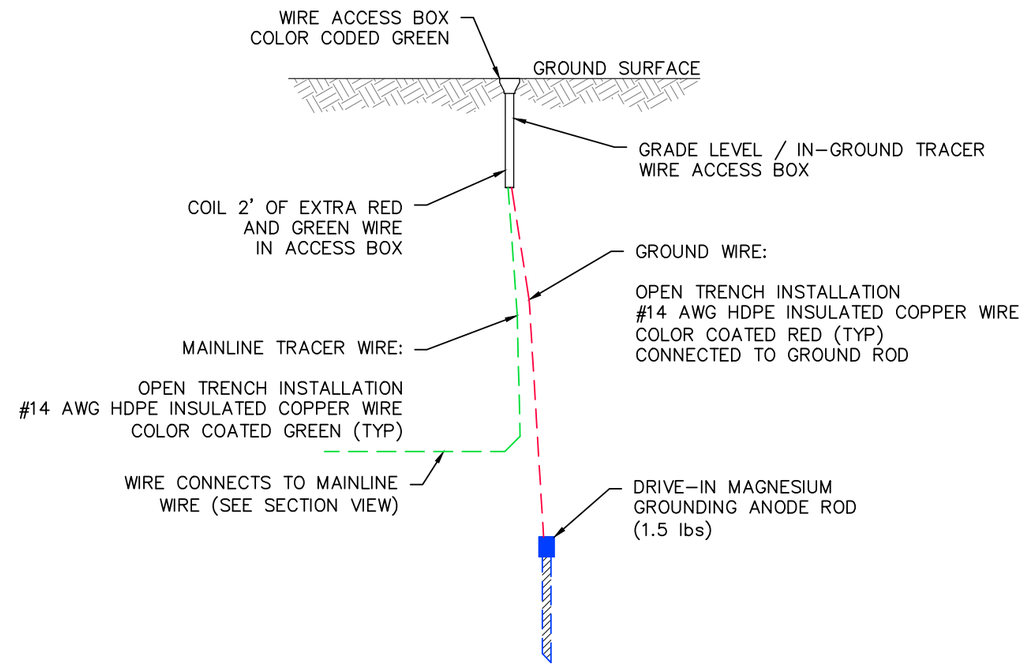

ACCESS BOX (SECTION VIEW)

NOT TO SCALE

C:\AUTOCAD\PROJECTS\MORTON HEIGHTS\PLAN SET\MORTON-HEIGHTS-TRACER-WIRE 11 MAR 2019.DWG LAST PLOTTED 7/30/2021 12:30 PM

FOR CONSTRUCTION

CALL UTILITY NOTIFICATION CENTER OF COLORADO
811
CALL 2-BUSINESS DAYS IN ADVANCE BEFORE YOU DIG, GRADE, OR EXCAVATE FOR THE MARKING OF UNDERGROUND MEMBER UTILITIES

REVISIONS: NO.	DATE	REVISION DESCRIPTION:

BOULDER COUNTY PUBLIC WORKS
ENGINEERING DIVISION

DESIGNED:	CAD/C3D:	CHECKED:	DATE:
RL	RL	DW	07/30/2021

MORTON HEIGHTS-2021

STORM DRAIN TRACER WIRE DETAIL

PROJECT NO: **RS-MOR-001** SHEET NO: **59**

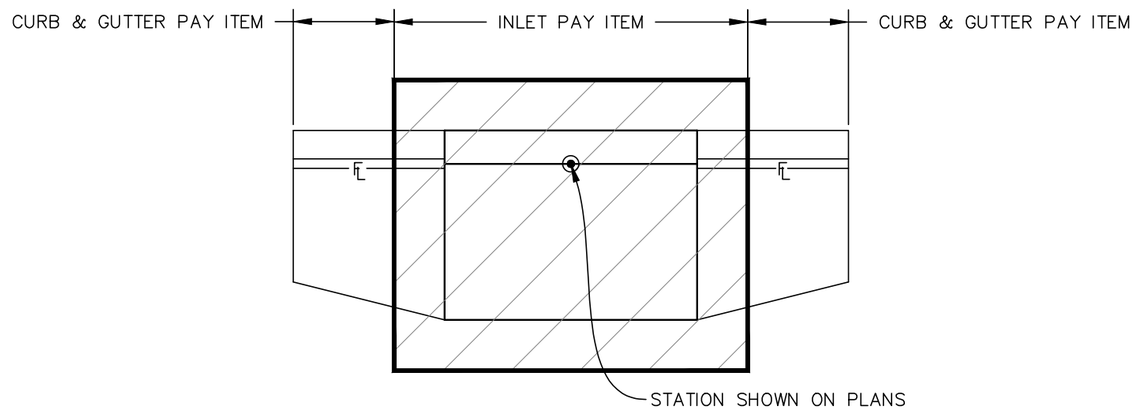

INLET PAY ITEMS

SCALE: 1"=2'

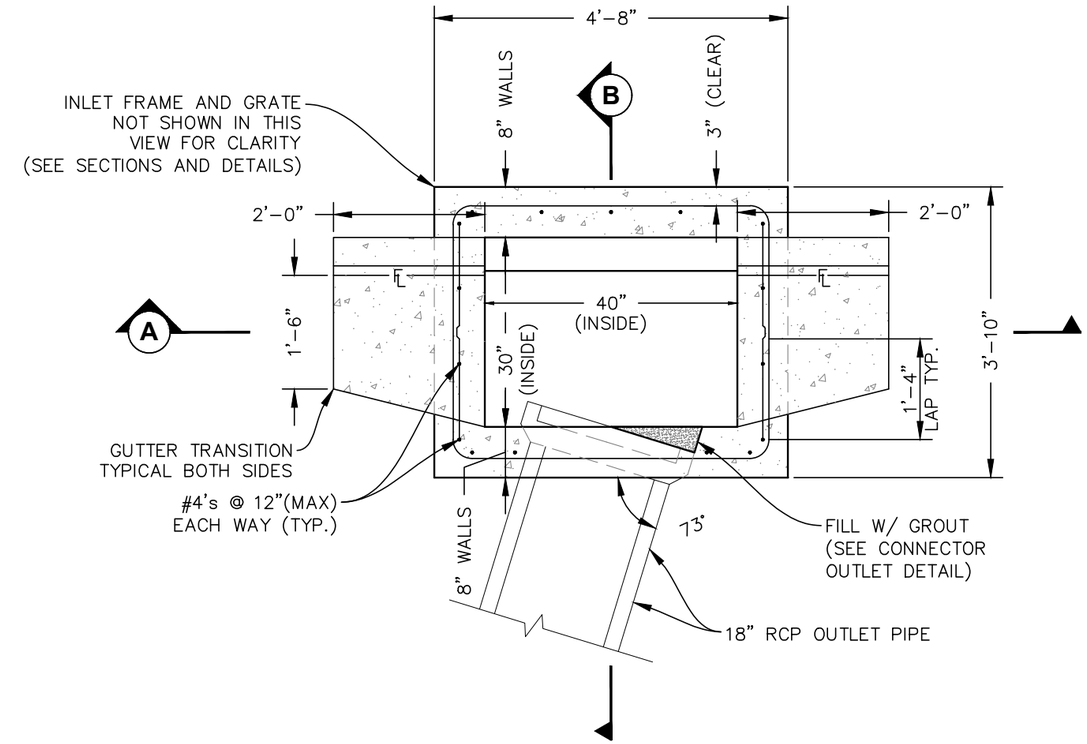

DENVER TYPE 16 STORM INLET - PLAN VIEW

SCALE: 1"=2'

INLET NOTES:

1. ALL CASTINGS SHALL CONFORM TO ASTM A-48.
2. ALL CASTINGS SHALL BE HEAVY DUTY, AND CAPABLE OF WITHSTANDING AASHTO H20 LOADING.
3. FLOOR SLOPE MAY BE POURED MONOLITHIC WITH BASE.
4. ALL REINFORCING STEEL SHALL BE ASTM, A-615, GRADE 60 DEFORMED BARS. DIAMETER OF BEND MEASURED ON THE INSIDE OF THE BAR SHALL BE A MINIMUM OF 6 BAR DIAMETER.
5. ALL WORK SHALL BE DONE IN ACCORDANCE WITH THE STANDARD SPECIFICATIONS APPLICABLE TO THE PROJECT.
6. CONCRETE SHALL HAVE A 28 DAY STRENGTH OF 4000 PSI.
7. NO FORM WORK SHALL REMAIN INSIDE STRUCTURE WHEN COMPLETE.
8. SUB-GRADE SHALL BE SHAPED UNDISTURBED MATERIAL OR OVER-EXCAVATED AND BACKFILLED WITH CLASS 1 STRUCTURAL BEDDING MATERIAL.
9. INLET WALLS SHALL BE FORMED BOTH INSIDE AND OUTSIDE. CASTING OF SIDEWALLS AGAINST EARTH IS NOT PERMITTED.
10. LEAN CONCRETE FILL TO BE fc' = 2000 PSI.

FOR CONSTRUCTION

CALL UTILITY NOTIFICATION CENTER OF COLORADO

811

CALL 2-BUSINESS DAYS IN ADVANCE BEFORE YOU DIG, GRADE, OR EXCAVATE FOR THE MARKING OF UNDERGROUND MEMBER UTILITIES

REVISIONS:	NO.	DATE	REVISION DESCRIPTION:

Boulder County

BOULDER COUNTY PUBLIC WORKS
ENGINEERING DIVISION

DESIGNED:	CAD/C3D:	CHECKED:	DATE:
RL	RL	DW	07/30/2021

MORTON HEIGHTS-2021

TYPE 16 STORM INLET

PROJECT NO: **RS-MOR-001** SHEET NO: **60**

C:\AUTOCAD\PROJECTS\MORTON HEIGHTS\PLAN SET\MORTON-HEIGHTS-TYPE 16 INLET 01 NOV 2019.DWG LAST PLOTTED 7/30/2021 12:30 PM

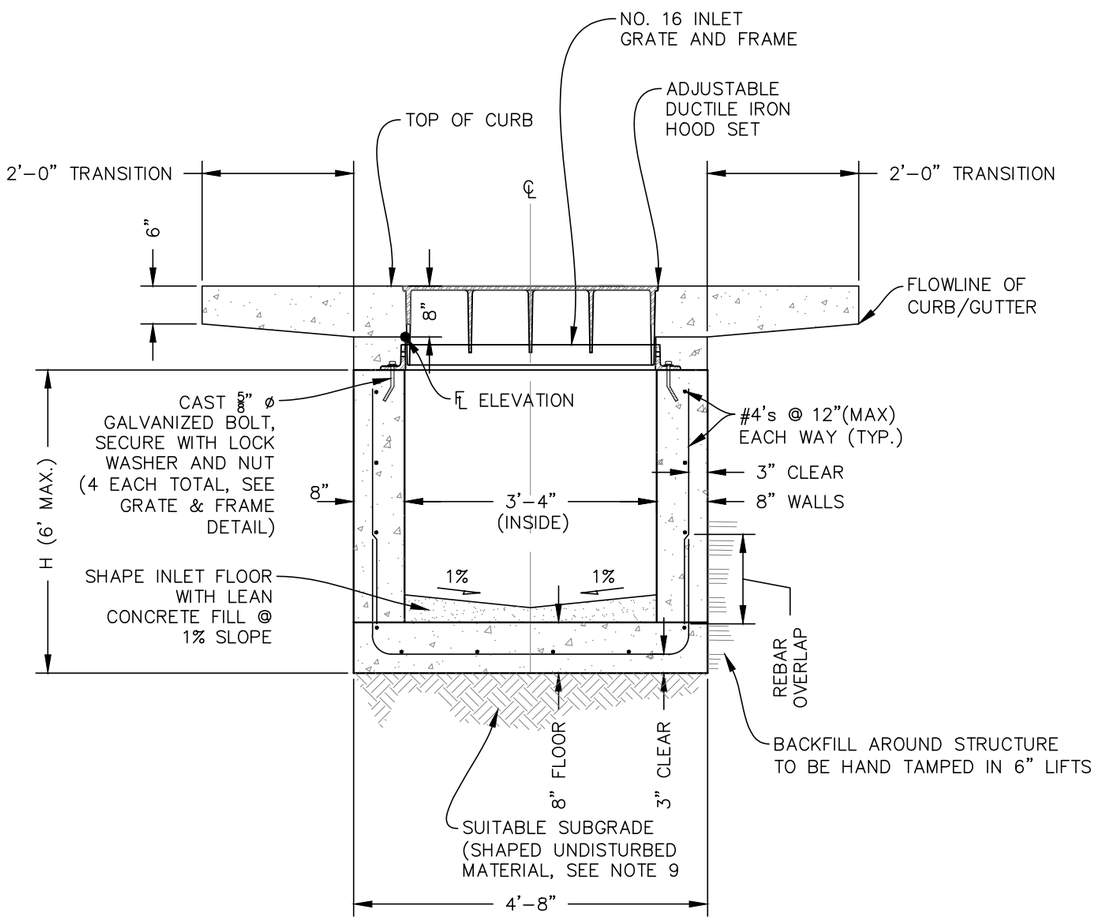

A SECTION
SCALE: 1"=2'

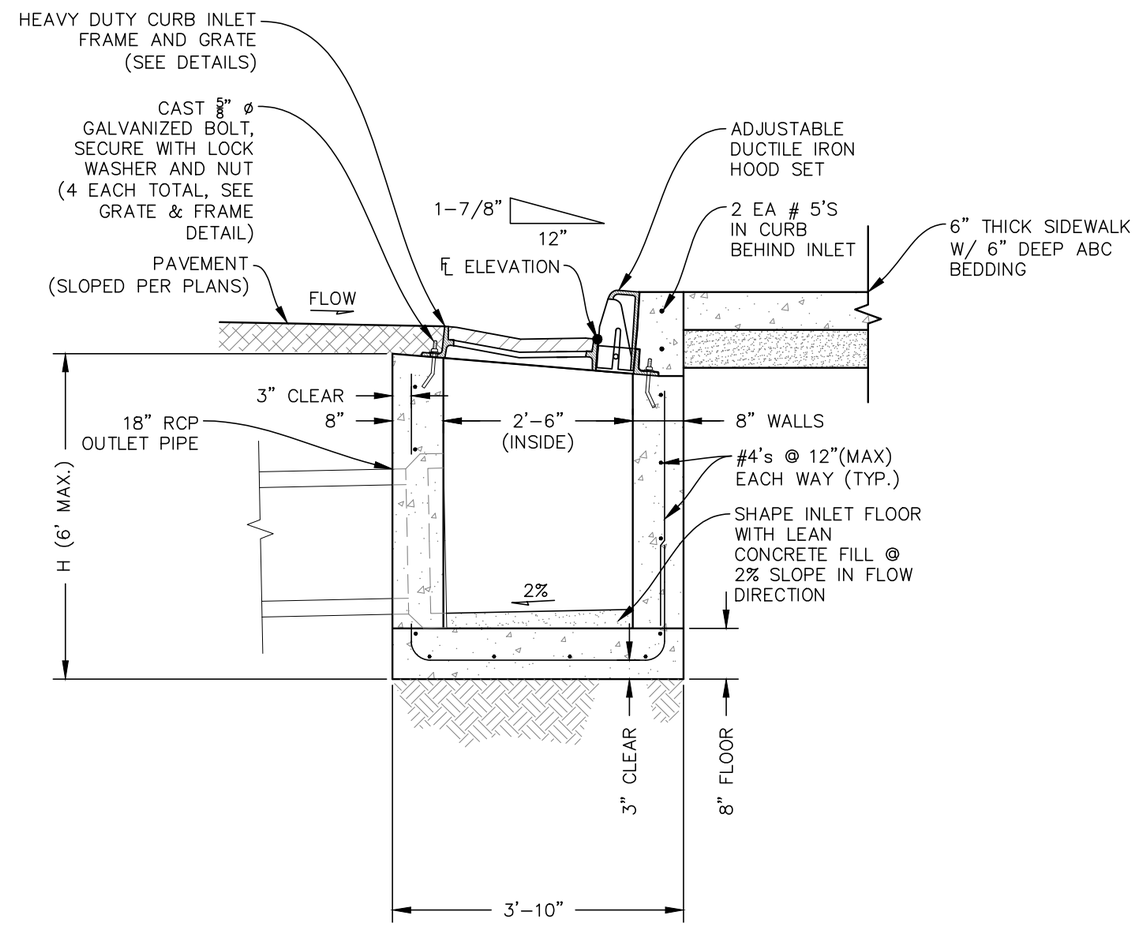

B SECTION
SCALE: 1"=2'

C:\AUTOCAD\PROJECTS\MORTON HEIGHTS\PLAN SET\MORTON-HEIGHTS-TYPE 16 INLET 01 NOV 2019.DWG LAST PLOTTED 7/30/2021 12:30 PM

FOR CONSTRUCTION

CALL UTILITY NOTIFICATION CENTER OF COLORADO
811
CALL 2-BUSINESS DAYS IN ADVANCE BEFORE YOU DIG, GRADE, OR EXCAVATE FOR THE MARKING OF UNDERGROUND MEMBER UTILITIES

REVISIONS:	NO.	DATE	REVISION DESCRIPTION:

BOULDER COUNTY PUBLIC WORKS
ENGINEERING DIVISION

DESIGNED:	CAD/C3D:	CHECKED:	DATE:
RL	RL	DW	07/30/2021

MORTON HEIGHTS-2021

TYPE 16 INLET SECTIONS

PROJECT NO: **RS-MOR-001** SHEET NO: **61**

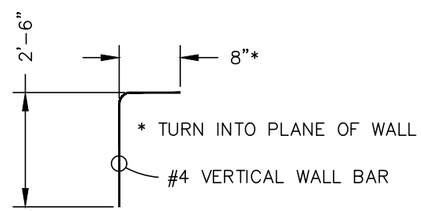

VERTICAL WALL REBAR

SCALE: N.T.S.

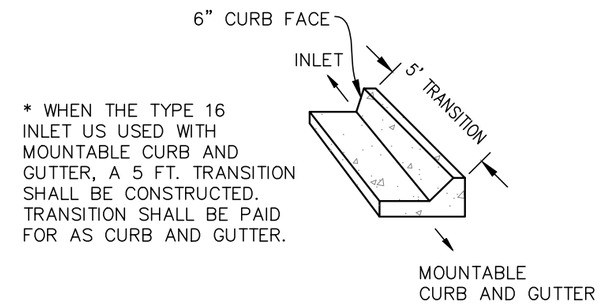

TRANSITION CURB (AS NEEDED)

SCALE: N.T.S.

NOTE:

CONTRACTOR TO NOTCH & BLOCK OUT AROUND PIPE OPENING AND FORM SMOOTH RADIUS AROUND PIPE WITH NON-SHRINK GROUT

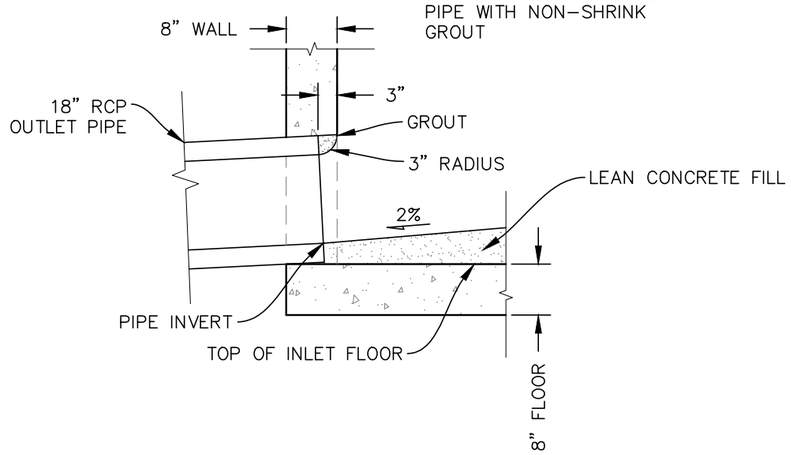

OUTLET PIPE CONNECTION

SCALE: N.T.S.

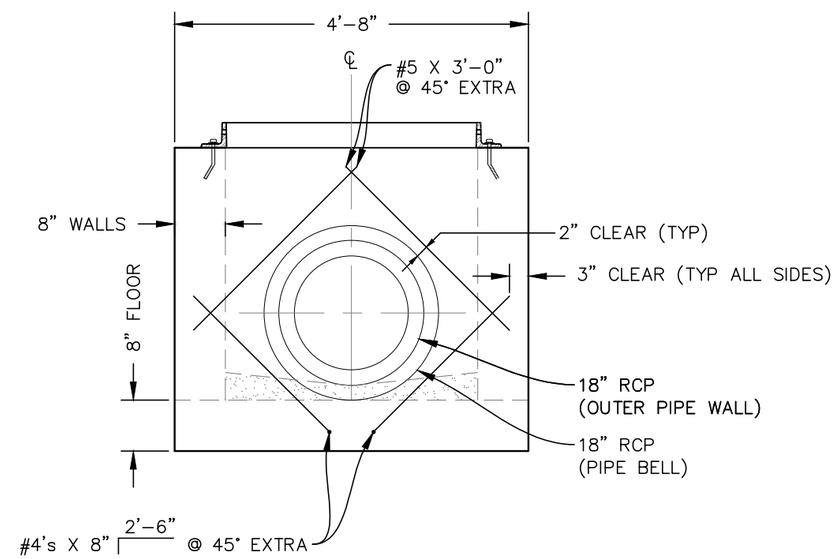

REBAR PLACEMENT AROUND OUTLET PIPE

SCALE: 1"=2'

FOR CONSTRUCTION

CALL UTILITY NOTIFICATION CENTER OF COLORADO

811

CALL 2-BUSINESS DAYS IN ADVANCE BEFORE YOU DIG, GRADE, OR EXCAVATE FOR THE MARKING OF UNDERGROUND MEMBER UTILITIES

REVISIONS:	NO.	DATE	REVISION DESCRIPTION:

BOULDER COUNTY PUBLIC WORKS
ENGINEERING DIVISION

DESIGNED:	CAD/C3D:	CHECKED:	DATE:
RL	RL	DW	07/30/2021

MORTON HEIGHTS-2021

TYPE 16 INLET DETAILS

PROJECT NO: RS-MOR-001 SHEET NO: 62

C:\AUTOCAD\PROJECTS\MORTON HEIGHTS\PLAN SET\MORTON-HEIGHTS-TYPE 16 INLET 01 NOV 2019.DWG LAST PLOTTED 7/30/2021 12:30 PM

7568Z3 7568Z4 7568T1 Set

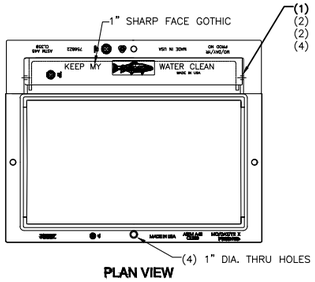

(1) HOOD BOLT SET
(2) 00981126 DOM
(2) 00981190 DOM
(4) 00981191 DOM

PLAN VIEW

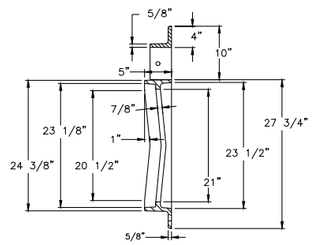

FRAME & CURB BACK SECTION

Product Number
00756838C01
Design Features
-Materials
Curb Inlet Frame
Gray Iron [CL35B]
Curb Inlet Frame
Gray Iron [CL35B]
Hood
Ductile Iron [70-50-05]

-Load Rating
Heavy Duty
-Open Area
340 sq in
-Coating
Undipped
-√ Designates Machined Surface

Certification
-
- ASTM A536
- AASHTO M306
-Country of Origin: USA

Major Components
00756838
00756839
00756861

Drawing Revision
05/31/2018 Designer: MAH
6/1/2018 Revised By: MAH

Disclaimer
Weights, lbs. kg, dimensions (inches/mm) and drawings provided for your guidance. We reserve the right to modify specifications without prior notice.

Contact
800 626 4653
ejco.com

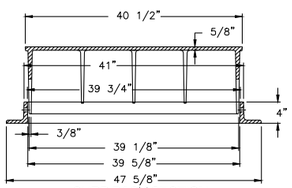

CURB BACK SECTION

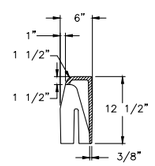

BACK SECTION

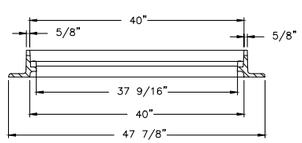

FRAME SECTION

NOTE:
COMPONENTS ARE SHIPPED LOOSE.
NOT ASSEMBLED.

7567M Grate

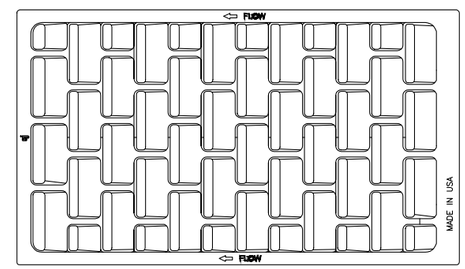

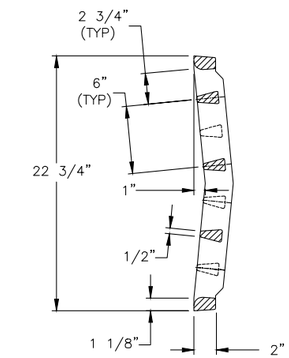

GRATE SECTION

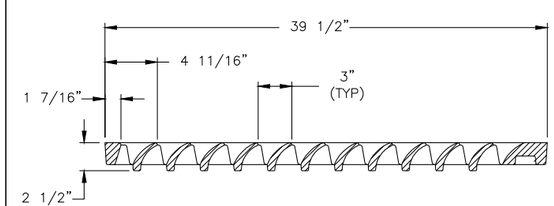

GRATE SECTION

Product Number
00756731
Design Features
-Materials
Gray Iron [CL35B]
-Design Load
Heavy Duty
-Open Area
340 sq in
-Coating
Undipped
-√ Designates Machined Surface

Certification
- ASTM A48
-
-
-Country of Origin: USA

Drawing Revision
03/22/2002 Designer: SBB
02/18/2014 Revised By: DAE

Disclaimer
Weights, lbs. kg, dimensions (inches/mm) and drawings provided for your guidance. We reserve the right to modify specifications without prior notice.

Contact
800 626 4653
ejco.com

NOTES:

1. GRATE AND FRAME MODELS SHOWN ARE EAST JORDAN IRONWORKS (https://www.ejco.com)
2. CONTRACTOR SHALL SUBMIT DRAWINGS AND SPECS FOR ANY GRATE SUBSTITUTIONS, AT LEAST 10 WORKING DAYS PRIOR TO INSTALL FOR REVIEW BY PROJECT ENGINEER.

FOR CONSTRUCTION

CALL UTILITY NOTIFICATION CENTER OF COLORADO
811
CALL 2-BUSINESS DAYS IN ADVANCE BEFORE YOU DIG, GRADE, OR EXCAVATE FOR THE MARKING OF UNDERGROUND MEMBER UTILITIES

REVISIONS:	NO.	DATE	REVISION DESCRIPTION:

BOULDER COUNTY PUBLIC WORKS
ENGINEERING DIVISION

DESIGNED:	CAD/C3D:	CHECKED:	DATE:
RL	RL	DW	07/30/2021

MORTON HEIGHTS–2021
TYPE 16 INLET GRATE & FRAME
PROJECT NO: **RS-MOR-001** SHEET NO: **63**

C:\AUTOCAD\PROJECTS\MORTON HEIGHTS\PLAN SET\MORTON-HEIGHTS-TYPE 16 INLET 01 NOV 2019.DWG LAST PLOTTED 7/30/2021 12:30 PM

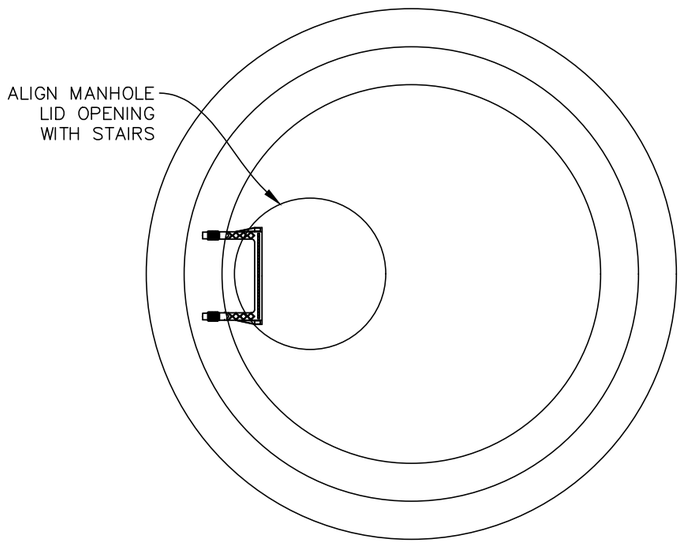

FLAT TOP PLAN VIEW

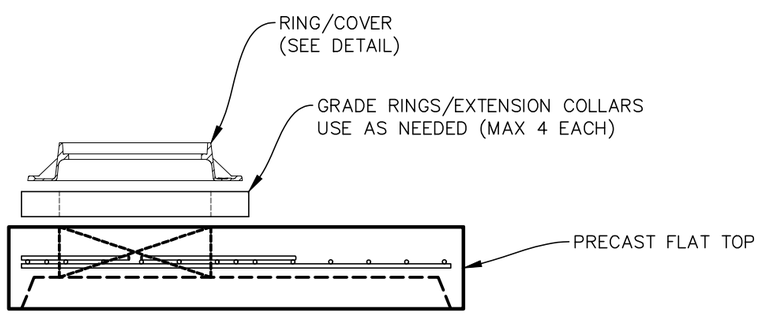

FLAT TOP SECTION VIEW

NOTES:

1. ALL PRECAST MANHOLES SHALL CONFORM WITH ASTM C-478.
2. ALL MANHOLES SHALL COMPLY WITH AASHTO HS-20 LOADING AND WITHSTAND IMPACT UP TO 3' BURY DEPTH ON FLAT TOP.
3. MANHOLE STEPS PER OSHA STD 01-01-009.
4. MOVING AND SETTING OF MANHOLES SHALL INCLUDE THE USE OF A SPREADER BAR TO PREVENT DAMAGE TO PRECAST MATERIALS.
5. CONFIRM PRECAST MANHOLE BASE, RISER AND FLATOP DIMENSIONS WITH PRECAST DESIGN ENGINEER PRIOR TO ORDERING AND INSTALLATION.

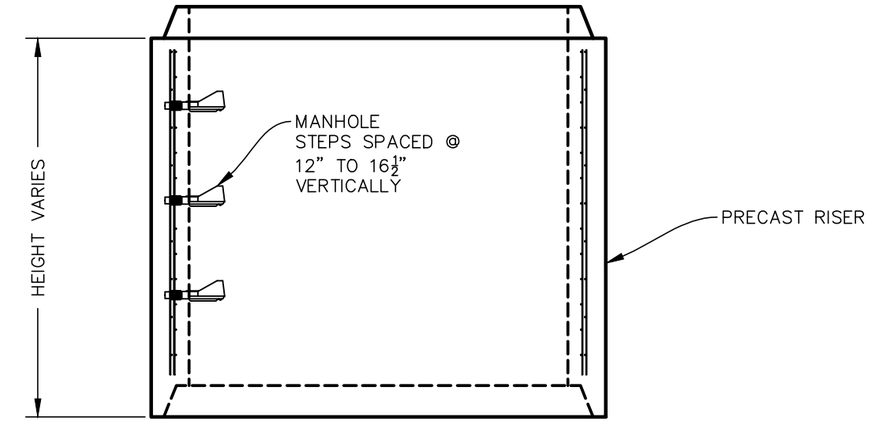

RISER SECTION VIEW

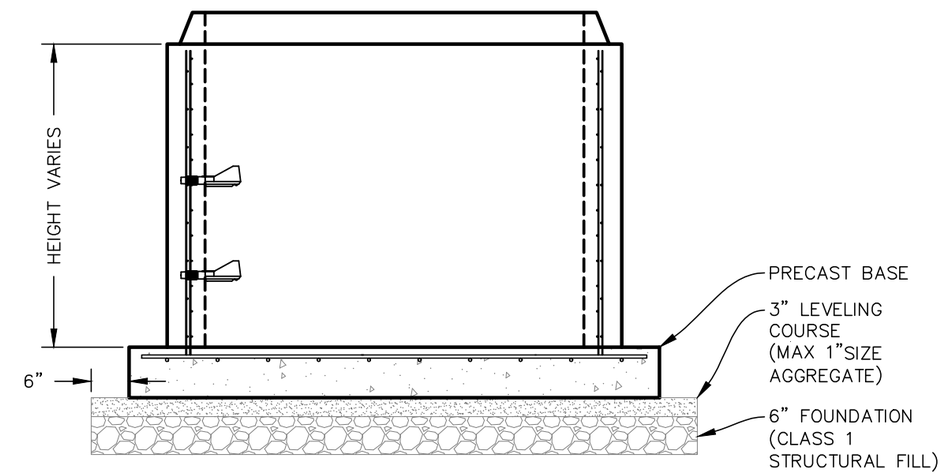

BASE SECTION VIEW

PRECAST MANHOLE BEDDING NOTES:

1. MANHOLE FOUNDATION: USE A MINIMUM OF 6 INCHES OF STRUCTURAL BACKFILL (CLASS 1) BEDDING MATERIAL COMPACTED TO 95% PROCTOR IN AN AREA NOT LESS THAN THE BASE AREA BUT PREFERABLY 6 INCHES BEYOND THE OUTSIDE RADIUS OF THE MANHOLE BASE.
2. LEVELING COURSE: A MINIMUM 3 INCHES THICK LEVELING COURSE IN AN AREA THAT MATCHES THE FOUNDATION. THE NOMINAL MAXIMUM AGGREGATE SIZE WITHIN THE LEVELING COURSE SHALL NOT BE GREATER THAN 1 INCH.

PRECAST STORM MANHOLE

SCALE: 1"=2'

FOR CONSTRUCTION

CALL UTILITY NOTIFICATION CENTER OF COLORADO
811
CALL 2-BUSINESS DAYS IN ADVANCE BEFORE YOU DIG, GRADE, OR EXCAVATE FOR THE MARKING OF UNDERGROUND MEMBER UTILITIES

REVISIONS: NO.	DATE	REVISION DESCRIPTION:

BOULDER COUNTY PUBLIC WORKS
ENGINEERING DIVISION

DESIGNED:	CAD/C3D:	CHECKED:	DATE:
RL	RL	DW	07/30/2021

MORTON HEIGHTS-2021

PRECAST STORM MANHOLE

PROJECT NO: RS-MOR-001 SHEET NO: 64

C:\AUTOCAD\PROJECTS\MORTON HEIGHTS\PLAN SET\MORTON-HEIGHTS-STORM-MANHOLES 14 NOV 2019.DWG LAST PLOTTED 7/30/2021 12:30 PM

1020Z Frame

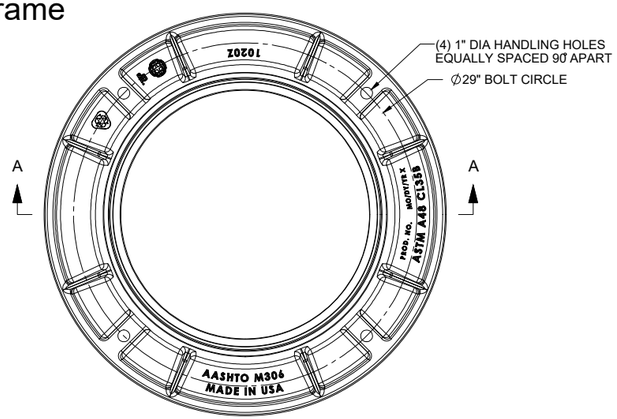

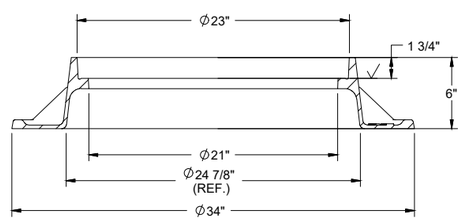

SECTION A-A

Product Number
00102010

Design Features
-Materials
Gray Iron (CL35B)
-Design Load
Heavy Duty
-Open Area
n/a
-Coating
Undipped
- Ø designates Machined Surface

Certification
-ASTM A48
-
-
-Country of Origin: USA

Drawing Revision
11/28/2008 Designer: JIJ
5/23/2017 Revised By: MAH

Disclaimer
Weights (lbs/kg), dimensions (inches/mm) and drawings provided for your guidance. We reserve the right to modify specifications without prior notice.

Contact
800 626 4653
ejco.com

STORM MANHOLE LID - FRAME

SCALE: N.T.S.

1020AHD Cover

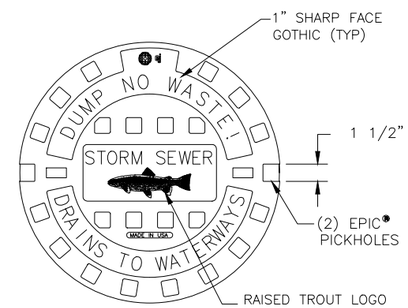

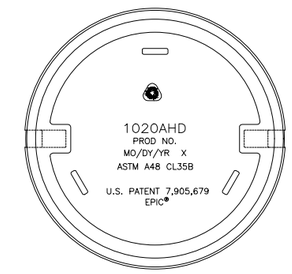

BOTTOM VIEW

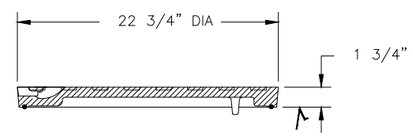

COVER SECTION

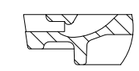

EPIC® DETAIL

Product Number
001020010

Design Features
-Materials
Gray Iron (CL35B)
-Design Load
Heavy Duty
-Open Area
n/a
-Coating
Undipped
-√ Designates Machined Surface

Certification
- ASTM A48
-
-
-Country of Origin: USA

Drawing Revision
03/10/2014 Designer: MAH
5/8/2018 Revised By: EBN

Disclaimer
Weights (lbs/kg), dimensions (inches/mm) and drawings provided for your guidance. We reserve the right to modify specifications without prior notice.

Contact
800 626 4653
ejco.com

STORM MANHOLE - LID

SCALE: N.T.S.

FOR CONSTRUCTION

CALL UTILITY NOTIFICATION CENTER OF COLORADO
811
CALL 2–BUSINESS DAYS IN ADVANCE BEFORE YOU DIG, GRADE, OR EXCAVATE FOR THE MARKING OF UNDERGROUND MEMBER UTILITIES

REVISIONS: NO.	DATE	REVISION DESCRIPTION:

BOULDER COUNTY PUBLIC WORKS
ENGINEERING DIVISION

DESIGNED:	CAD/C3D:	CHECKED:	DATE:
RL	RL	DW	07/30/2021

MORTON HEIGHTS–2021
STORM MH LID AND FRAME
PROJECT NO: **RS-MOR-001** SHEET NO: **65**

C:\AUTOCAD\PROJECTS\MORTON HEIGHTS\PLAN SET\MORTON-HEIGHTS-STORM-MANHOLES 14 NOV 2019.DWG LAST PLOTTED 7/30/2021 12:30 PM

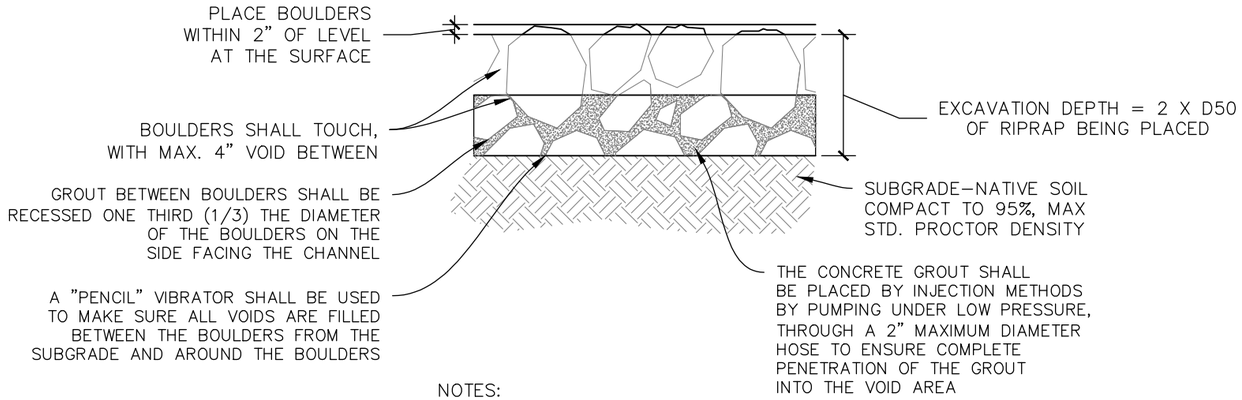

NOTES:

1) SEE MILE HIGH FLOOD DISTRICT SPECIFICATIONS SECTION 31 37 19 FOR DETAILS ASSOCIATED WITH GROUTED RIPRAP PLACEMENT.

S1 GROUTED RIPRAP

SCALE: 1"=5'

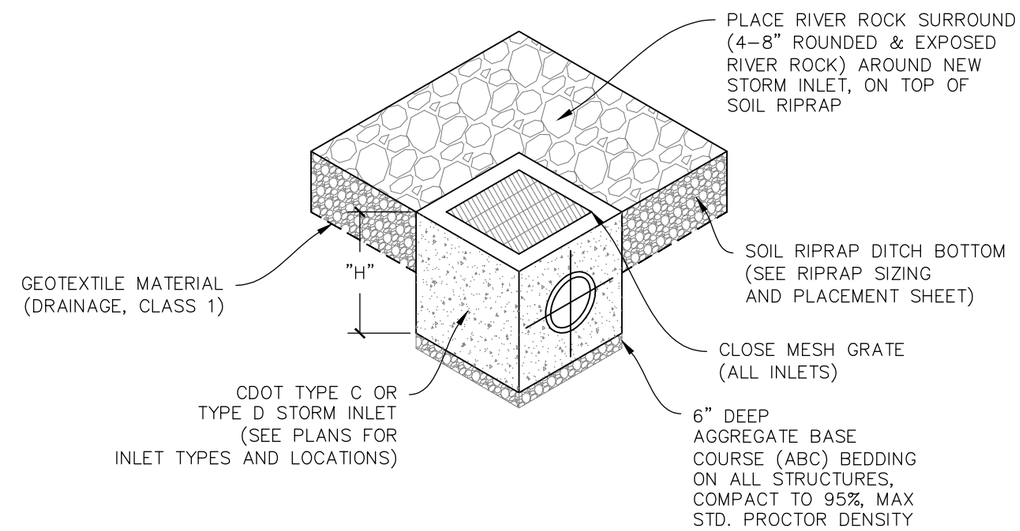

STORM INLET RIPRAP (ISOMETRIC VIEW)

SCALE: 1"=5'

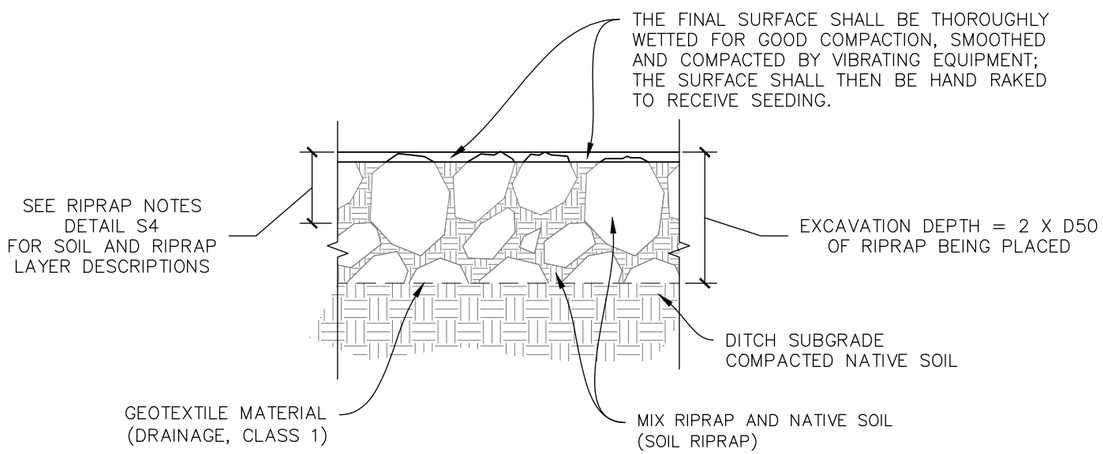

NOTE:

SEE RIPRAP NOTES DETAIL S4 FOR FULL DESCRIPTION OF SOIL & RIPRAP LAYER DESCRIPTIONS.

S2 SOIL RIPRAP - SECTION

SCALE: 1"=5'

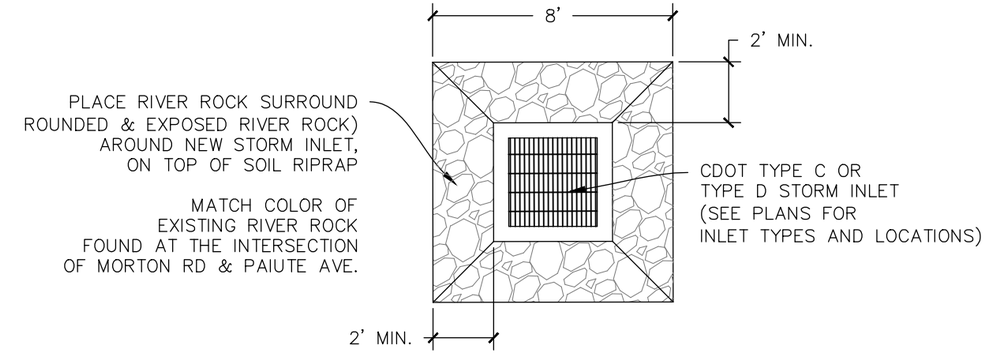

S3 STORM INLET RIPRAP (PLAN VIEW)

SCALE: 1"=5'

NOTES:

1. CLOSE MESH GRATE IS REQUIRED ON ALL GRATED STORM INLETS DUE TO CLOSE PROXIMITY TO THE ELEMENTARY SCHOOL, MULTI–USE PATH AND SIDEWALKS.
2. SEE CDOT M–604–10 AND CDOT M–604–11 FOR REINFORCEMENT, STEEL QUANTITIES AND GRATE INSTALLATION DETAILS.
3. HEIGHT OR "H" VARIES BY LOCATION. SEE PLAN AND PROFILE DRAWINGS FOR INLET DEPTHS AND GRATE ELEVATIONS.

FOR CONSTRUCTION

CALL UTILITY NOTIFICATION CENTER OF COLORADO
811
CALL 2–BUSINESS DAYS IN ADVANCE BEFORE YOU DIG, GRADE, OR EXCAVATE FOR THE MARKING OF UNDERGROUND MEMBER UTILITIES

REVISIONS: NO.	DATE	REVISION DESCRIPTION:

BOULDER COUNTY PUBLIC WORKS
ENGINEERING DIVISION

DESIGNED:	CAD/C3D:	CHECKED:	DATE:
RL	RL	DW	07/30/2021

MORTON HEIGHTS–2021

STORM DETAILS (1)

PROJECT NO: RS-MOR-001 SHEET NO: 66

C:\AUTOCAD\PROJECTS\MORTON HEIGHTS\PLAN SET\MORTON-HEIGHTS-STORM-DETAILS 21 FEB 2019.DWG LAST PLOTTED 7/30/2021 12:30 PM

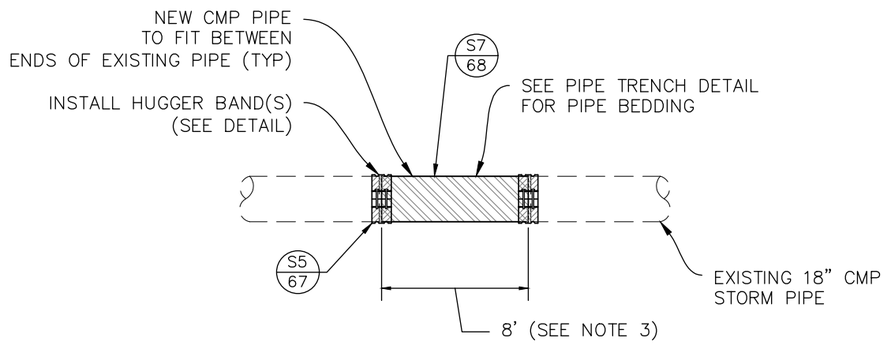

PLAN VIEW OF PROPOSED PIPE PATCH

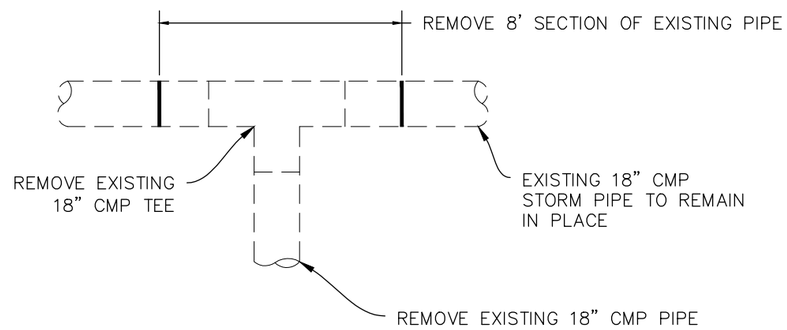

PLAN VIEW OF EXISTING CMP TEE

S5 CORRUGATED METAL PIPE PATCHING DETAIL

SCALE: 1"=5'

CONTECH® ENGINEERED SOLUTIONS

H-7 HUGGER Band

H-7 HUGGER Band

A simple, economical coupling for corrugated pipe

The H-7 HUGGER Band is a simple, low-cost coupling for helically corrugated pipe with rerolled annular ends. Like other HUGGER Bands, it is economical, simple and easy to install. The H-7 HUGGER Band provides excellent soilt tightness.

The H-7 HUGGER Band is available for pipe in diameters from 12 to 36 inches. It is available in galvanized steels or Aluminized Steel Type 2 for added corrosion resistance.

Within the size range given, the H-7 HUGGER Ban meets the specificiations of AASHTO's Joint Performance Cirteria in the Standard Joint category. Details are shown to the right.

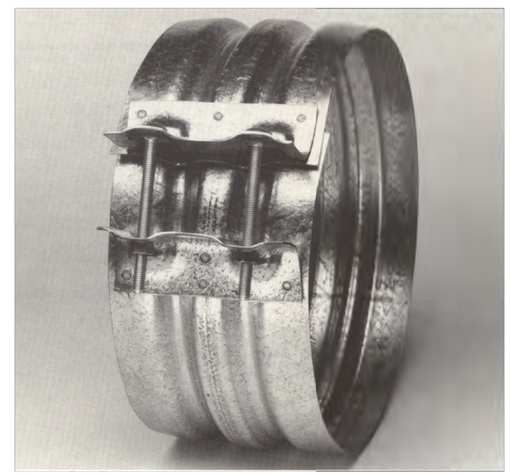

SOURCE: https: //www.conteches.com

S5 CMP HUGGER BAND DETAIL

SCALE: 1"=2'

H-7 HUGGER Band 2 ²/₃" x ¹/₂" Corrugation
H-7 Standard Joint HEL-COR®

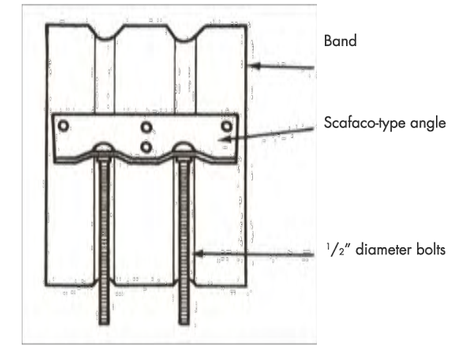

Connection Detail

Scafco-type angles are attached with spot welds, rivets or hand welds

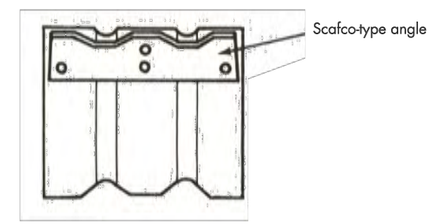

Section

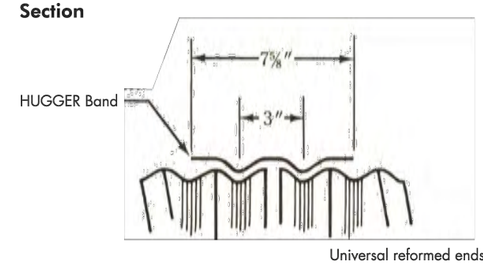

Pipe Size, in.	Nominal Thickness, in. Pipe	Nominal Thickness, in. Band	Type of Connector
12 thru 36	0.064-0.109	0.052	Scafco-type angle

Note: The H-7 HUGGER Band is also available with a single-bolt Scafco-type angle or with bolt, bar and strap connectors.

FOR CONSTRUCTION

CALL UTILITY NOTIFICATION CENTER OF COLORADO
811
CALL 2-BUSINESS DAYS IN ADVANCE BEFORE YOU DIG, GRADE, OR EXCAVATE FOR THE MARKING OF UNDERGROUND MEMBER UTILITIES

REVISIONS: NO.	DATE	REVISION DESCRIPTION:

BOULDER COUNTY PUBLIC WORKS
ENGINEERING DIVISION

DESIGNED:	CAD/C3D:	CHECKED:	DATE:
RL	RL	DW	07/30/2021

MORTON HEIGHTS–2021
CORRUGATED METAL PIPE PATCHING (1)
PROJECT NO: RS-MOR-001 SHEET NO: 67

C:\AUTOCAD\PROJECTS\MORTON HEIGHTS\PLAN SET\MORTON-HEIGHTS-STORM-DETAILS 21 FEB 2019.DWG LAST PLOTTED 7/30/2021 12:30 PM

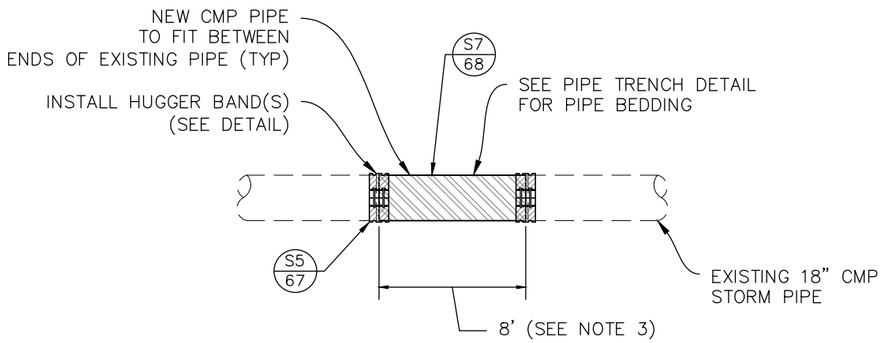

PLAN VIEW OF PROPOSED PIPE PATCH

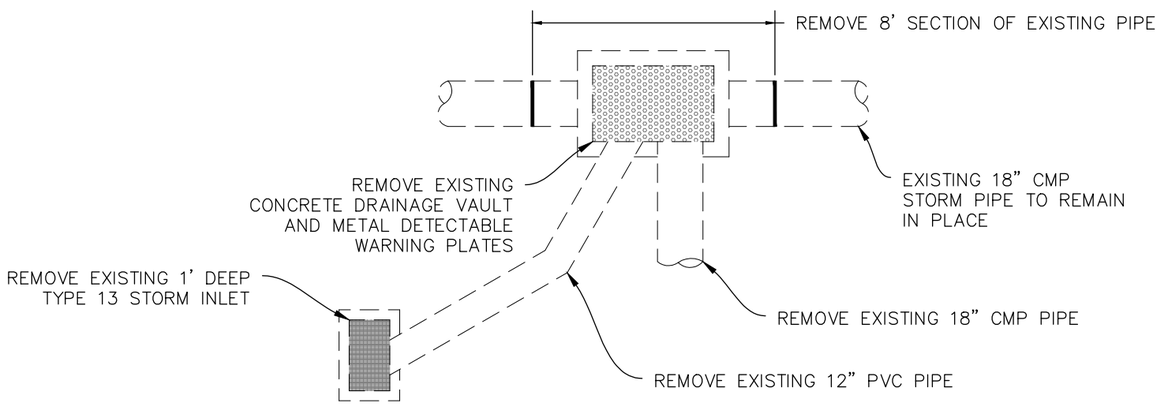

PLAN VIEW OF EXISTING STRUCTURE

NOTES:

1. ORIGINAL DRAINAGE STRUCTURE WAS CONSTRUCTED IN 2009. PLANS BY CENTENNIAL ENGINEERING, AND AVAILABLE UPON REQUEST. NO AS-BUILT INFORMATION IS AVAILABLE.

2. CONTRACTOR SHALL ADJUST THE LENGTH OF THE PIPE PATCH AS NEEDED IN ORDER TO ACCOMMODATE THE CONSTRUCTION OF NEW CURB AND GUTTER OVER THE TOP OF THE PATCH.

3. PIPE PATCH LENGTH DIMENSIONS SHOWN IN THIS DETAIL ARE APPROXIMATE BASED ON BEST POSSIBLE INFORMATION AVAILABLE. CONTRACTOR SHALL CONFIRM ALL FIELD DIMENSIONS.

4. CONTRACTOR SHALL CONTACT THE PROJECT ENGINEER ONCE THE EXISTING 18" CORRUGATED METAL PIPE LOCATED IN NIWOT ROAD IS EXPOSED FOR VISUAL INSPECTION.

S6 CORRUGATED METAL PIPE PATCHING DETAIL

SCALE: 1"=5'

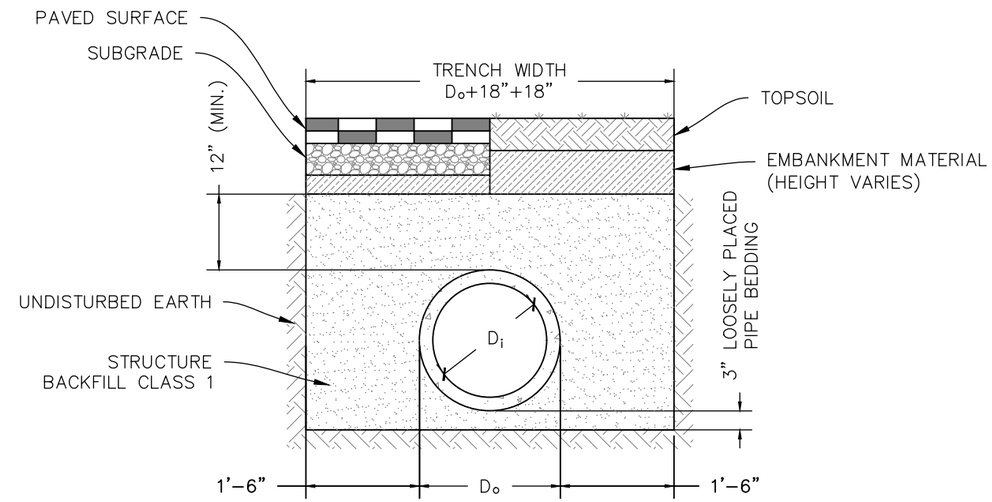

NOTES:

1. PIPE BEDDING SHALL BE STRUCTURE BACKFILL, CLASS 1.
2. EMBANKMENT MATERIAL SHALL BE INCLUDED IN THE COST OF PIPE COMPLETE IN PLACE (CIP).

S7 PIPE TRENCH

SCALE: 1"=2'

C:\AUTOCAD\PROJECTS\MORTON HEIGHTS\PLAN SET\MORTON-HEIGHTS-STORM-DETAILS 21 FEB 2019.DWG LAST PLOTTED 7/30/2021 12:30 PM

FOR CONSTRUCTION

CALL UTILITY NOTIFICATION CENTER OF COLORADO
811
CALL 2-BUSINESS DAYS IN ADVANCE BEFORE YOU DIG, GRADE, OR EXCAVATE FOR THE MARKING OF UNDERGROUND MEMBER UTILITIES

REVISIONS: NO.	DATE	REVISION DESCRIPTION:

BOULDER COUNTY PUBLIC WORKS
ENGINEERING DIVISION

DESIGNED:	CAD/C3D:	CHECKED:	DATE:
RL	RL	DW	07/30/2021

MORTON HEIGHTS-2021

CORRUGATED METAL PIPE PATCHING (2)

PROJECT NO: **RS-MOR-001** SHEET NO: **68**

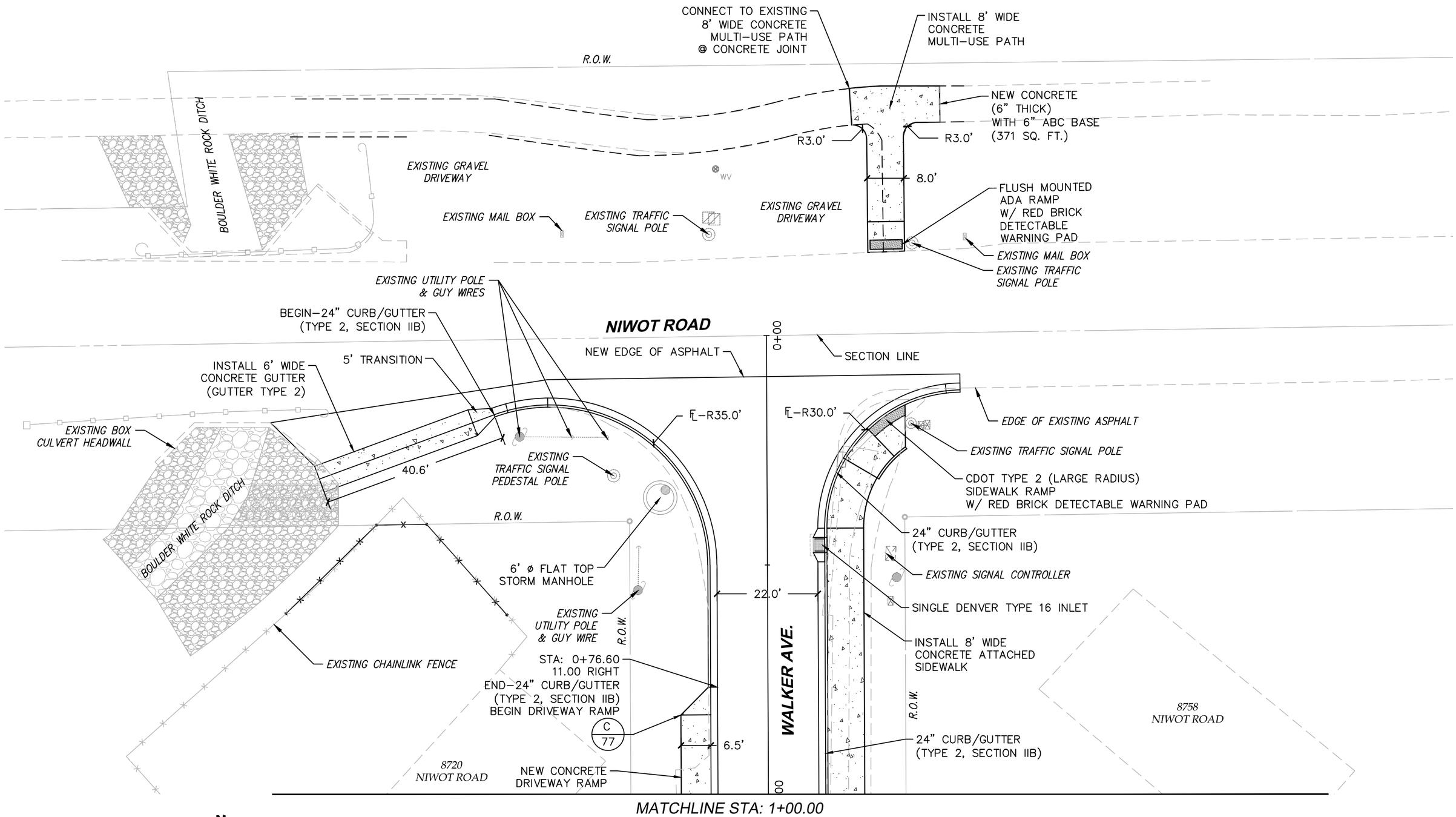

0 20 40
HORIZONTAL SCALE: 1"=20'

N

FOR CONSTRUCTION

CALL UTILITY NOTIFICATION CENTER OF COLORADO
811
CALL 2-BUSINESS DAYS IN ADVANCE BEFORE YOU DIG, GRADE, OR EXCAVATE FOR THE MARKING OF UNDERGROUND MEMBER UTILITIES

REVISIONS:	NO.	DATE	REVISION DESCRIPTION:

BOULDER COUNTY PUBLIC WORKS
ENGINEERING DIVISION

DESIGNED:	CAD/C3D:	CHECKED:	DATE:
RL	RL	DW	07/30/2021

MORTON HEIGHTS-2021

NIWOT RD-WALKER AVE-CONCRETE

PROJECT NO: **RS-MOR-001** SHEET NO: **69**

C:\AUTOCAD\PROJECTS\MORTON HEIGHTS\PLAN SET\MORTON-HEIGHTS CONCRETE 28 FEB 2020.DWG LAST PLOTTED 7/30/2021 12:31 PM

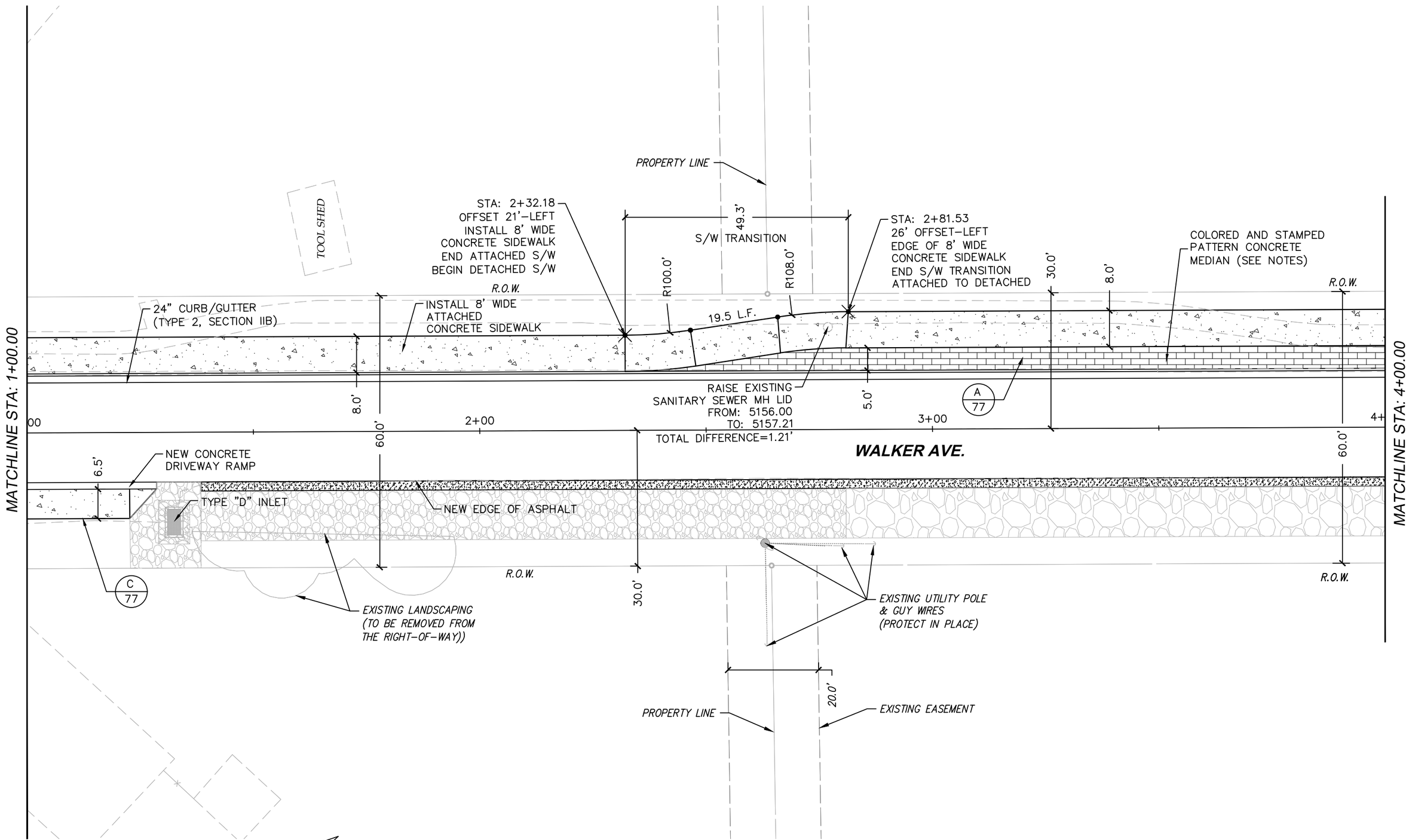

0 20 40

HORIZONTAL SCALE: 1"=20'

N

FOR CONSTRUCTION

CALL UTILITY NOTIFICATION CENTER OF COLORADO

811

CALL 2-BUSINESS DAYS IN ADVANCE BEFORE YOU DIG, GRADE, OR EXCAVATE FOR THE MARKING OF UNDERGROUND MEMBER UTILITIES

REVISIONS:	NO.	DATE	REVISION DESCRIPTION:

BOULDER COUNTY PUBLIC WORKS
ENGINEERING DIVISION

DESIGNED:	CAD/C3D:	CHECKED:	DATE:
RL	RL	DW	07/30/2021

MORTON HEIGHTS-2021

WALKER AVE-CONCRETE

PROJECT NO: **RS-MOR-001** SHEET NO: **70**

C:\AUTOCAD\PROJECTS\MORTON HEIGHTS\PLAN SET\MORTON-HEIGHTS CONCRETE 28 FEB 2020.DWG LAST PLOTTED 7/30/2021 12:31 PM

MATCHLINE STA: 4+00.00

INSTALL 8' WIDE DETACHED CONCRETE SIDEWALK

A 77

NEW EDGE OF ASPHALT

24" CURB/GUTTER (TYPE 2, SECTION IIB)

8761 MORTON ROAD

STORM F.E.S.

22.0'

5.0'

RAISE EXISTING SANITARY SEWER MH LID
FROM: 5162.68
TO: 5164.23
TOTAL DIFFERENCE=1.55'

19.0'

8.0'

WALKER AVE.

11.0'

MEDIAN COVER COLORED AND STAMPED (SEE NOTES) (131 SQ. FT.)

EXISTING GRAVEL DRIVEWAY

EX. R.O.W.

TYPE "C" INLET

6' ø STORM MH

A 77

EDGE OF EXISTING ASPHALT

CENTERLINE OF ROW AND PROJECT CONTROL LINE

STA: 2+40.69
−3.81 LEFT
END CONCRETE CURB
(CDOT TYPE 4−SPECIAL)

5+00

R1.0'

8.0'

8.0'

6.0'

R30.0'

RAMP−USE TO ADJUST GRADE

8' ASPHALT CYCLE TRACK

R38.0'

PI: 5+18.03

0+00

℄−R15.0'

1+00

2+00

8' WIDE TYPE 2 (DIRECTIONAL) RAMP

TAPER END OF CURB FOR SAFETY

B 74

MATCHLINE STA: 2+50.00

STA: 5+18.03 WALKER AVE.
= 0+00 MORTON RD.
CONTROL ALIGNMENTS
ARE BASED ON CENTER
OF EXISTING RIGHT−OF−WAY

6' WIDE TYPE 2 (DIRECTIONAL) RAMP

22.0'

MEDIAN COVER COLORED AND STAMPED (SEE NOTES) (131 SQ. FT.)

STA: 1+08.14
−1.88 LEFT
END 24" CURB/GUTTER
(TYPE 2, SECTION IIB)

STA: 1+50.48
−2.49 LEFT
BEGIN CONCRETE CURB
(CDOT TYPE 4−SPECIAL)

60.0' R.O.W.

MORTON ROAD

A 77

4' ø STORM MH

℄−R10.0'

R10.0'

5' ø STORM MH(S)

STA: 0+76.22
28.70' RIGHT
TIE NEW CURB & GUTTER
TO EXISTING SIDEWALK

6' WIDE TYPE 2 (DIRECTIONAL) RAMP

6.0'

6.0'

EX. R.O.W.

STA: 5+56.11
−11.00 LEFT
END 24" CURB/GUTTER
(TYPE 2, SECTION IIB)

EXIST R.O.W.

BEGIN NEW 6' SIDEWALK

LOWER EXISTING SANITARY SEWER MH LID
FROM: 5167.13
TO: 5167.05
TOTAL DIFFERENCE=(−)0.08'

TEMPORARY CONSTRUCTION ACCESS EASEMENT (8' X 50')

4' ø STORM MH(S)

NIWOT ELEMENTARY SCHOOL
8778 MORTON ROAD

TYPE "D" INLET

0 20 40
HORIZONTAL SCALE: 1"=20'

N

FOR CONSTRUCTION

CALL UTILITY NOTIFICATION CENTER OF COLORADO
811
CALL 2−BUSINESS DAYS IN ADVANCE BEFORE YOU DIG, GRADE, OR EXCAVATE FOR THE MARKING OF UNDERGROUND MEMBER UTILITIES

REVISIONS:	NO.	DATE	REVISION DESCRIPTION:

BOULDER COUNTY PUBLIC WORKS
ENGINEERING DIVISION

DESIGNED:	CAD/C3D:	CHECKED:	DATE:
RL	RL	DW	07/30/2021

MORTON HEIGHTS−2021
WALKER AVE-MORTON RD-CONCRETE
PROJECT NO: RS-MOR-001 SHEET NO: 71

C:\AUTOCAD\PROJECTS\MORTON HEIGHTS\PLAN SET\MORTON−HEIGHTS CONCRETE 28 FEB 2020.DWG LAST PLOTTED 7/30/2021 12:31 PM

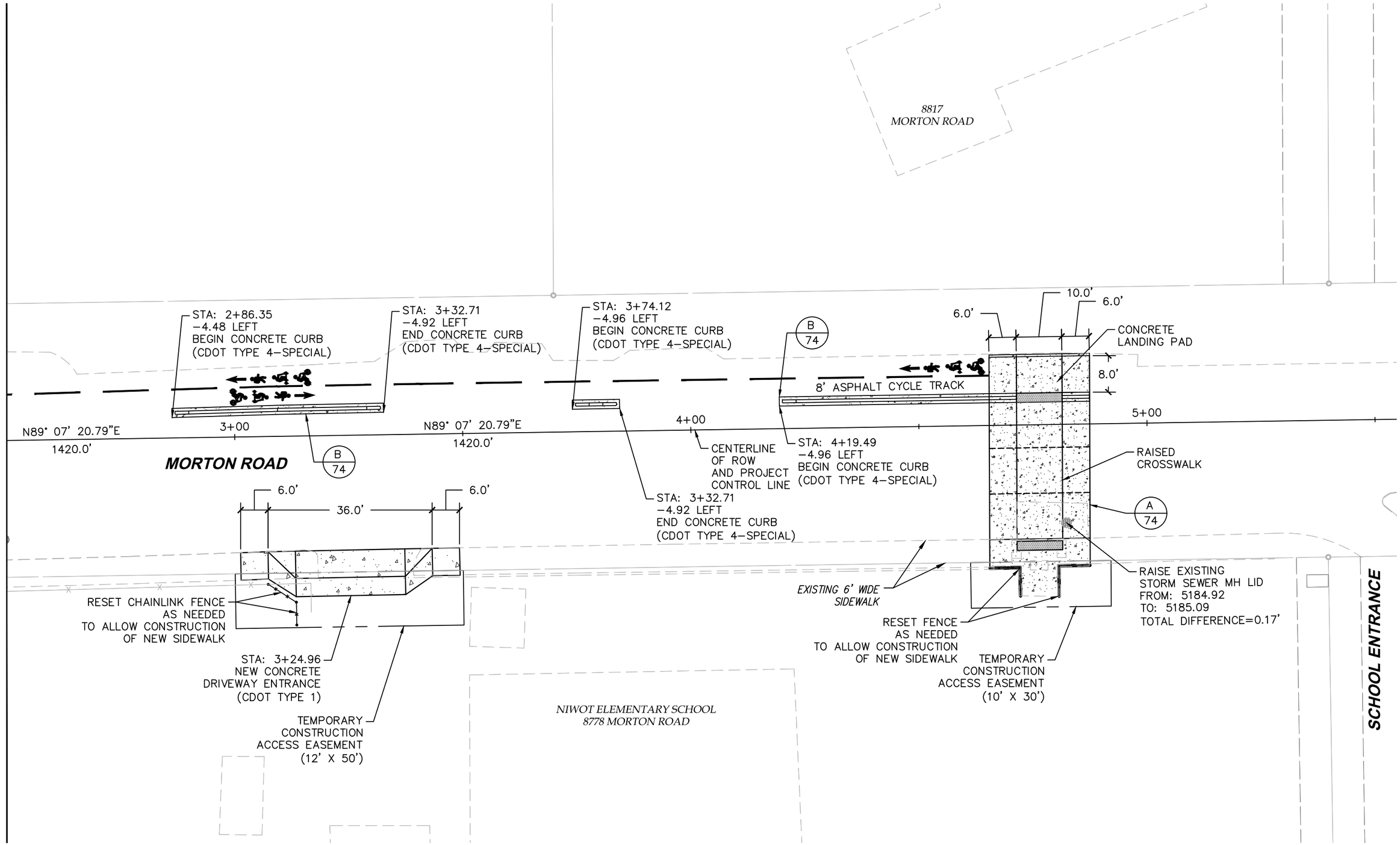

0 20 40
HORIZONTAL SCALE: 1"=20'

N

FOR CONSTRUCTION

CALL UTILITY NOTIFICATION CENTER OF COLORADO
811
CALL 2-BUSINESS DAYS IN ADVANCE BEFORE YOU DIG, GRADE, OR EXCAVATE FOR THE MARKING OF UNDERGROUND MEMBER UTILITIES

REVISIONS: NO.	DATE	REVISION DESCRIPTION:

BOULDER COUNTY PUBLIC WORKS
ENGINEERING DIVISION

DESIGNED:	CAD/C3D:	CHECKED:	DATE:
RL	RL	DW	07/30/2021

MORTON HEIGHTS-2021
MORTON RD-CONCRETE
PROJECT NO: **RS-MOR-001** SHEET NO: **72**

C:\AUTOCAD\PROJECTS\MORTON HEIGHTS\PLAN SET\MORTON-HEIGHTS CONCRETE 28 FEB 2020.DWG LAST PLOTTED 7/30/2021 12:31 PM

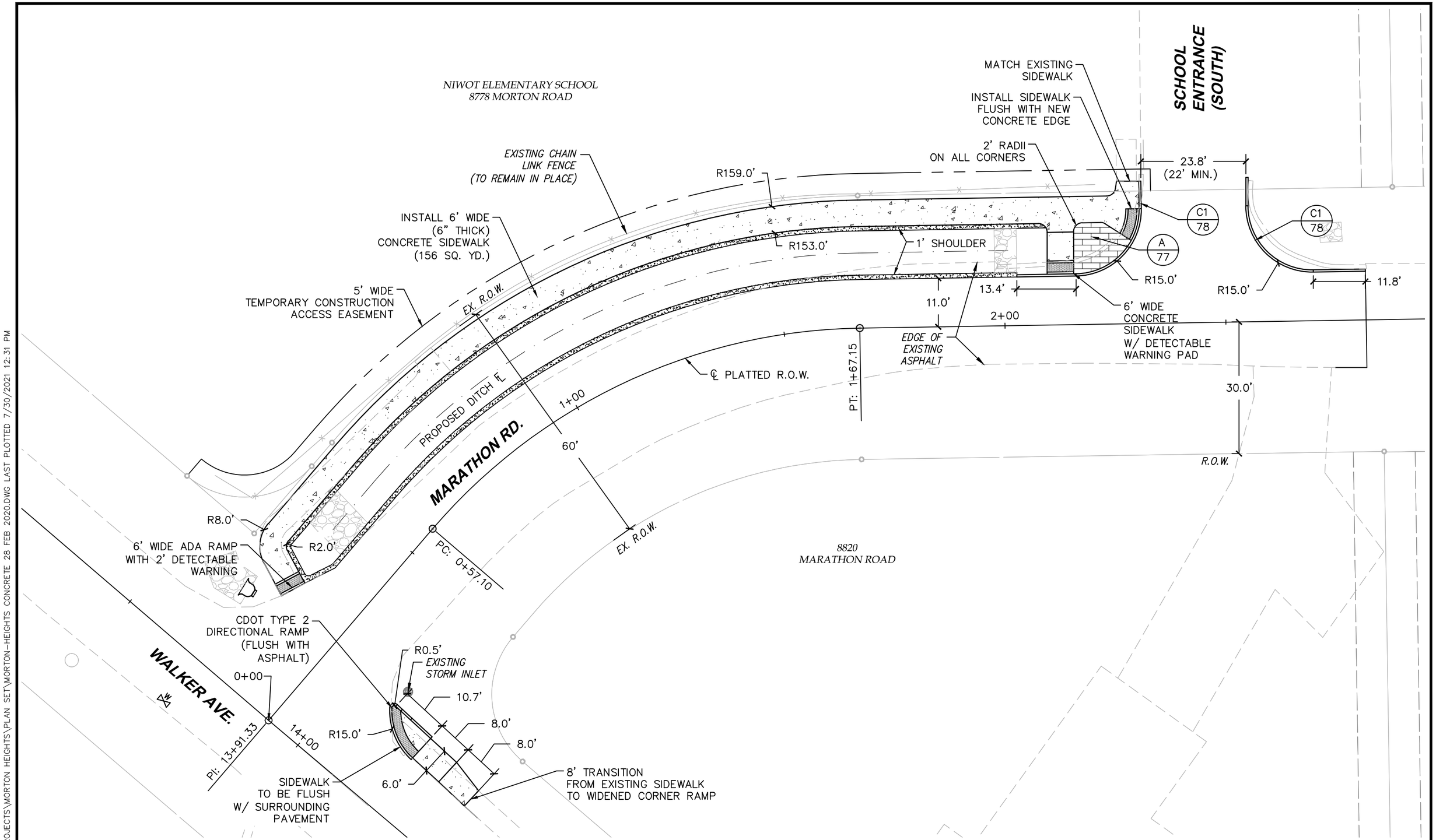

0 20 40
HORIZONTAL SCALE: 1"=20'

N

FOR CONSTRUCTION

CALL UTILITY NOTIFICATION CENTER OF COLORADO
811
CALL 2-BUSINESS DAYS IN ADVANCE BEFORE YOU DIG, GRADE, OR EXCAVATE FOR THE MARKING OF UNDERGROUND MEMBER UTILITIES

REVISIONS:	NO.	DATE	REVISION DESCRIPTION:

BOULDER COUNTY PUBLIC WORKS
ENGINEERING DIVISION

DESIGNED:	CAD/C3D:	CHECKED:	DATE:
RL	RL	DW	07/30/2021

MORTON HEIGHTS-2021

MARATHON RD-CONCRETE

PROJECT NO: **RS-MOR-001** SHEET NO: **73**

C:\AUTOCAD\PROJECTS\MORTON HEIGHTS\PLAN SET\MORTON-HEIGHTS CONCRETE 28 FEB 2020.DWG LAST PLOTTED 7/30/2021 12:31 PM

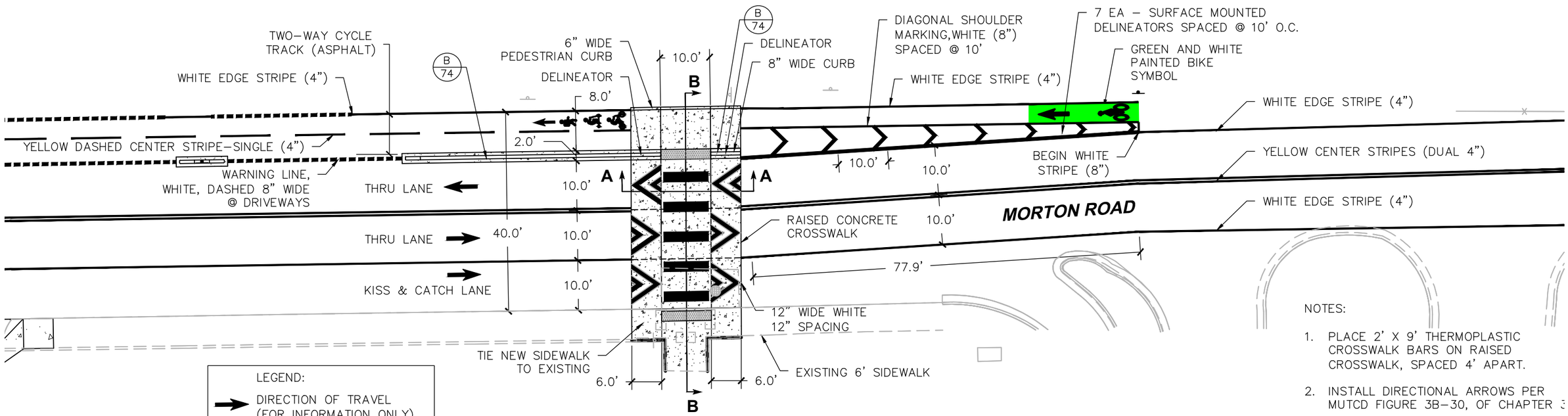

NOTES:

1. PLACE 2' X 9' THERMOPLASTIC CROSSWALK BARS ON RAISED CROSSWALK, SPACED 4' APART.
2. INSTALL DIRECTIONAL ARROWS PER MUTCD FIGURE 3B-30, OF CHAPTER 3
3. ALL STRIPING AND THERMOPLASTIC PAVEMENT MARKING SHALL BE PER MUTCD OR BOULDER COUNTY MULTIMODAL STANDARDS.

(A) RAISED CROSSWALK (PLAN VIEW)

SCALE: 1"=20'

℄ STATION–MORTON RD: 4+76.42

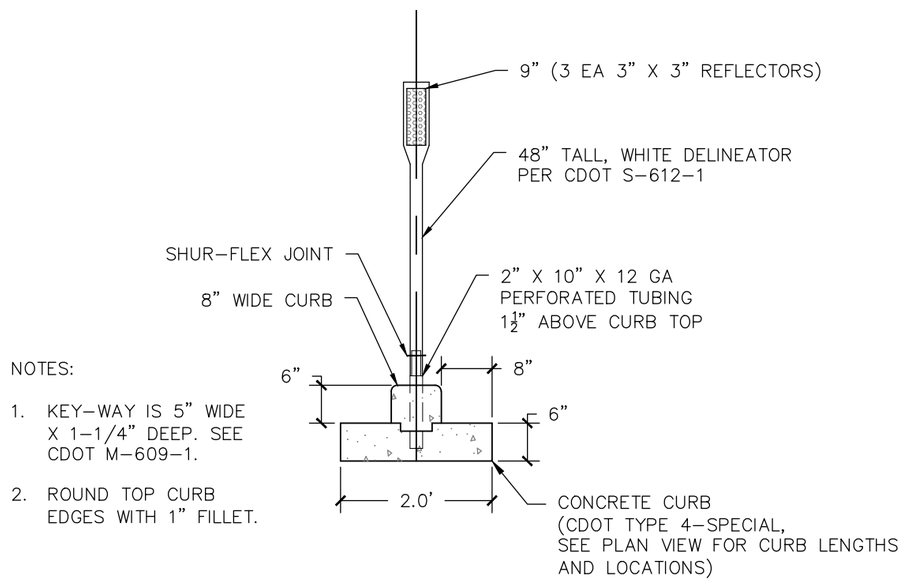

NOTES:

1. KEY-WAY IS 5" WIDE X 1-1/4" DEEP. SEE CDOT M-609-1.
2. ROUND TOP CURB EDGES WITH 1" FILLET.

(B) CURB MOUNTED DELINEATOR

SCALE: 1"=2'

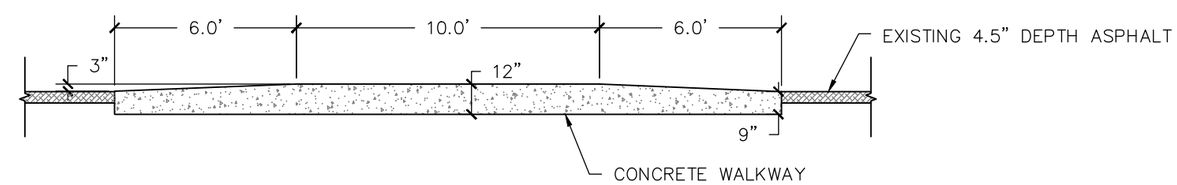

RAISED CROSSWALK (SECTION A-A)

SCALE: 1"=5'

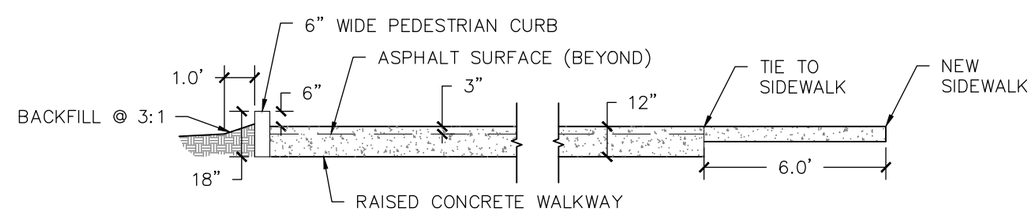

RAISED CROSSWALK (SECTION B-B)

SCALE: 1"=5'

0 20 40

HORIZONTAL SCALE: 1"=20'

N

FOR CONSTRUCTION

CALL UTILITY NOTIFICATION CENTER OF COLORADO

811

CALL 2-BUSINESS DAYS IN ADVANCE BEFORE YOU DIG, GRADE, OR EXCAVATE FOR THE MARKING OF UNDERGROUND MEMBER UTILITIES

REVISIONS: NO.	DATE	REVISION DESCRIPTION:

BOULDER COUNTY PUBLIC WORKS
ENGINEERING DIVISION

DESIGNED:	CAD/C3D:	CHECKED:	DATE:
RL	RL	DW	07/30/2021

MORTON HEIGHTS–2021

MORTON RD RAISED X-WALK

PROJECT NO: **RS-MOR-001** SHEET NO: **74**

C:\AUTOCAD\PROJECTS\MORTON HEIGHTS\PLAN SET\MORTON-HEIGHTS-X-WALK 07 FEB 2019.DWG LAST PLOTTED 7/30/2021 12:31 PM

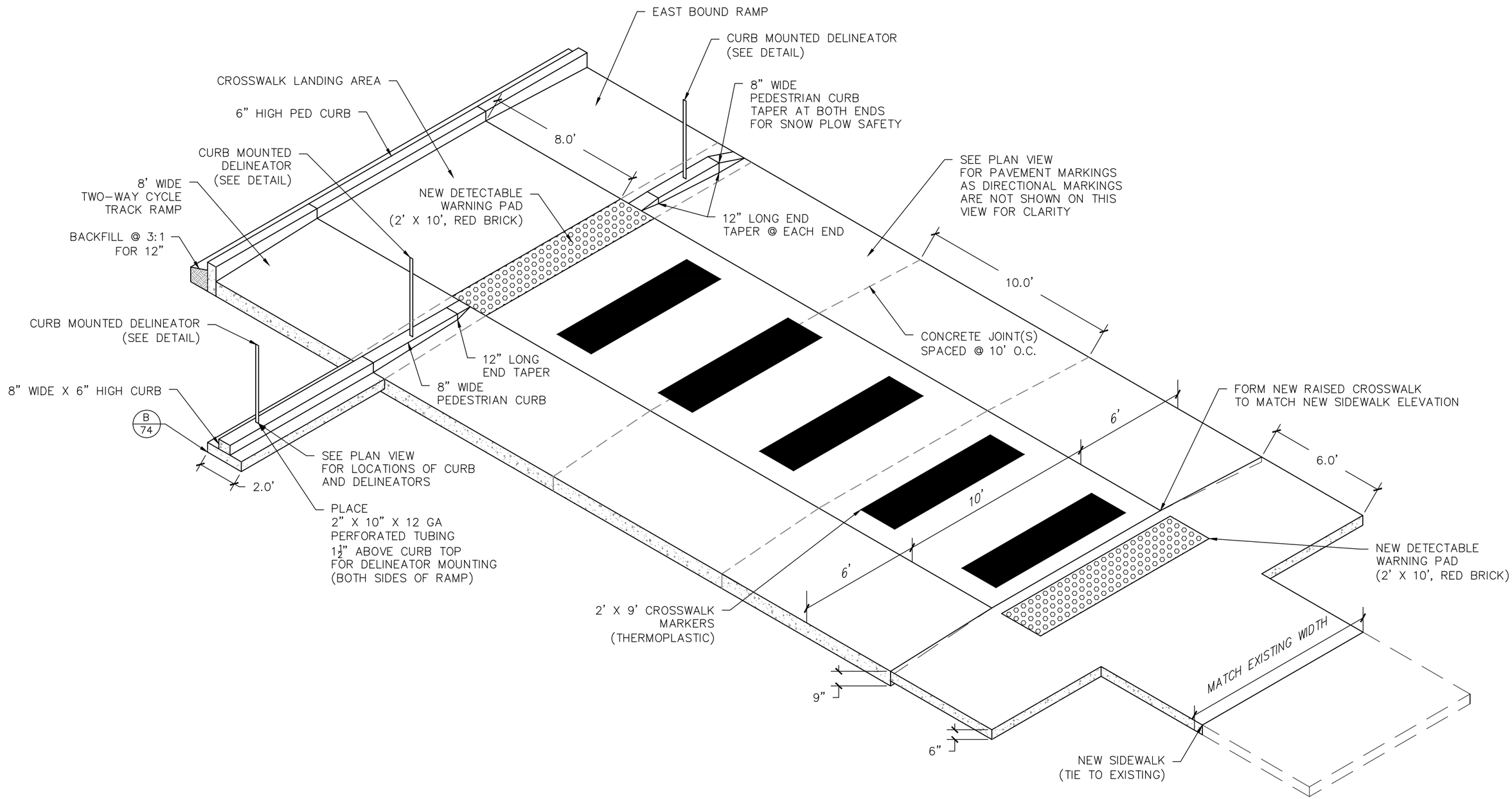

RAISED CROSSWALK (ISOMETRIC VIEW)

SCALE: 1"=5'

C:\AUTOCAD\PROJECTS\MORTON HEIGHTS\PLAN SET\MORTON-HEIGHTS-X-WALK 07 FEB 2019.DWG LAST PLOTTED 7/30/2021 12:32 PM

FOR CONSTRUCTION

CALL UTILITY NOTIFICATION CENTER OF COLORADO

811

CALL 2-BUSINESS DAYS IN ADVANCE BEFORE YOU DIG, GRADE, OR EXCAVATE FOR THE MARKING OF UNDERGROUND MEMBER UTILITIES

REVISIONS: NO.	DATE	REVISION DESCRIPTION:

Boulder County

BOULDER COUNTY PUBLIC WORKS
ENGINEERING DIVISION

DESIGNED:	CAD/C3D:	CHECKED:	DATE:
RL	RL	DW	07/30/2021

MORTON HEIGHTS-2021

RAISED CROSSWALK-ISO VIEW

PROJECT NO: **RS-MOR-001** SHEET NO: **75**

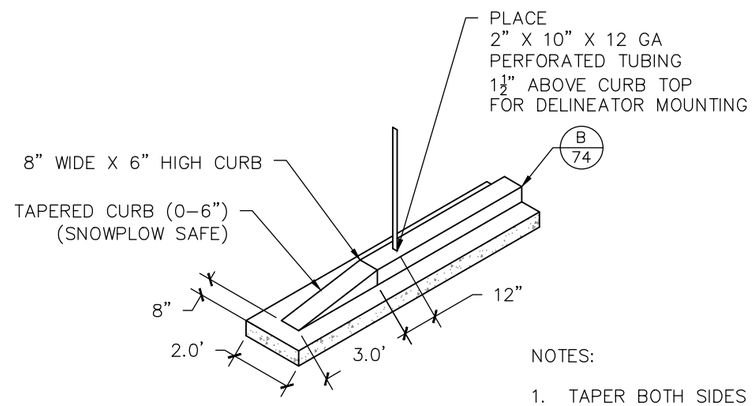

NOTES:

1. TAPER BOTH SIDES OF EACH DRIVEWAY ENTRANCE.

CYCLE TRACK CURB (ISOMETRIC VIEW)

SCALE: 1"=5'

C:\AUTOCAD\PROJECTS\MORTON HEIGHTS\PLAN SET\MORTON-HEIGHTS-X-WALK 07 FEB 2019.DWG LAST PLOTTED 7/30/2021 12:32 PM

FOR CONSTRUCTION

CALL UTILITY NOTIFICATION CENTER OF COLORADO

811

CALL 2-BUSINESS DAYS IN ADVANCE BEFORE YOU DIG, GRADE, OR EXCAVATE FOR THE MARKING OF UNDERGROUND MEMBER UTILITIES

REVISIONS:	NO.	DATE	REVISION DESCRIPTION:

BOULDER COUNTY PUBLIC WORKS
ENGINEERING DIVISION

DESIGNED:	CAD/C3D:	CHECKED:	DATE:
RL	RL	DW	07/30/2021

MORTON HEIGHTS–2021

CYCLE TRACK CURB

PROJECT NO: **RS-MOR-001** SHEET NO: **76**

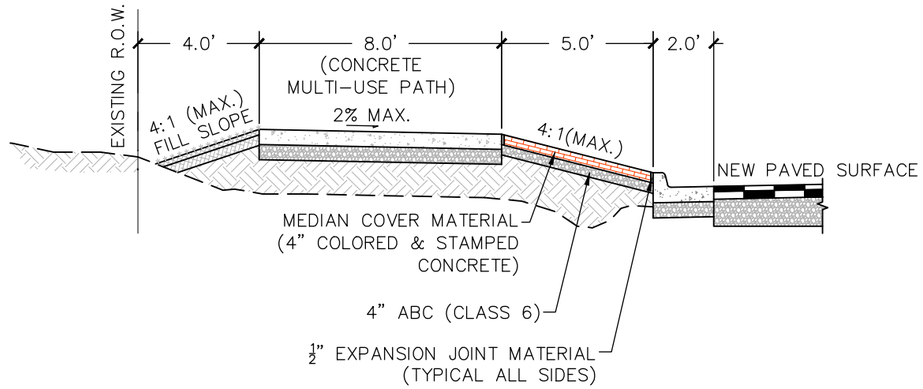

NOTES:

1. COLORED & STAMPED MEDIAN COVER:

- COLOR–DAVIS – BRICK RED, #160
- STAMP PATTERN: BASKET WEAVE

A MEDIAN COVER (BRICK CONCRETE STAMP PATTERN)

1"=5'

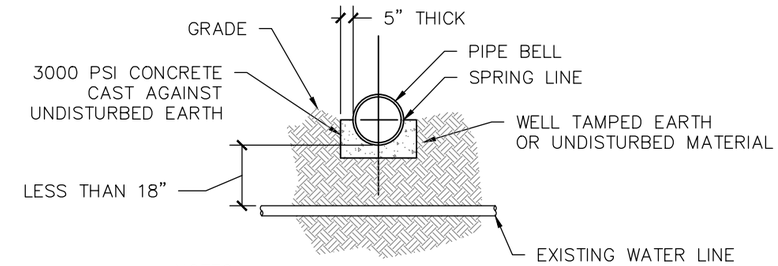

NOTES:

1. WHEN WATER MAIN CROSSES UNDER THE STORM SEWER, THE SEWER SHALL BE ENCASED WITH 5 INCHES OF CONCRETE THAT EXTENDS 10 FEET ON EACH SIDE OF THE CROSSING.
2. CLEARANCE BETWEEN PIPES SHALL BE 18" OR GREATER. WHEN CLEARANCE CAN NOT BE OBTAINED, CONCRETE ENCASEMENT SHALL BE PLACED UNDER/OVER STORM PIPE AS SHOWN.
3. SEE LEFTHAND WATER DISTRICT STANDARDS AND SPECIFICATIONS DATED SEPTEMBER 2012, PAGE 26.

B STORM PIPE CONCRETE ENCASEMENT

SCALE: 1"=5'

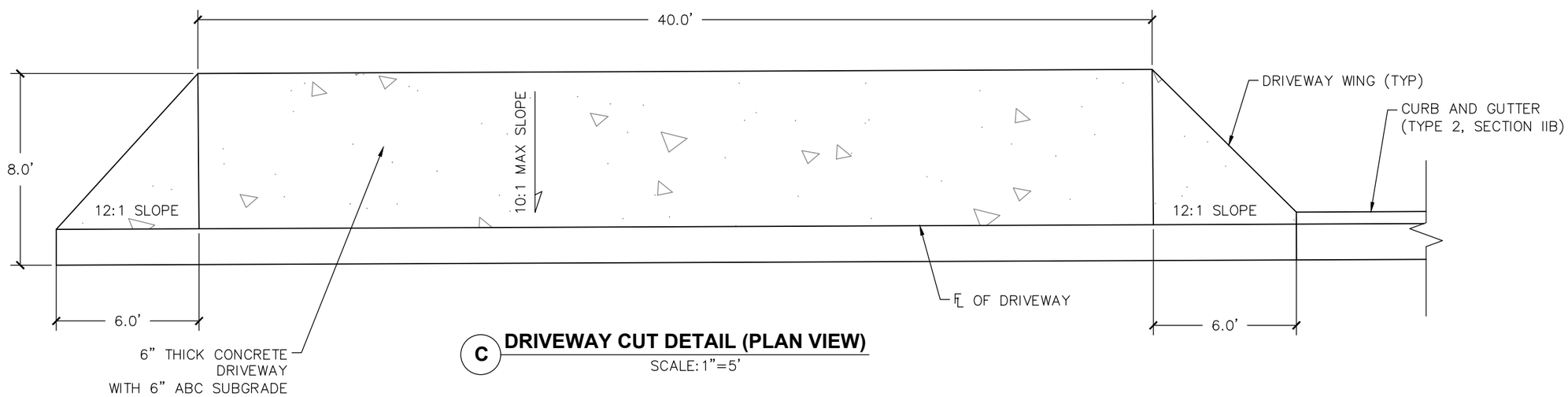

C DRIVEWAY CUT DETAIL (PLAN VIEW)

SCALE: 1"=5'

C:\AUTOCAD\PROJECTS\MORTON HEIGHTS\PLAN SET\MORTON-HEIGHTS-CONCRETE-DETAILS 14 JAN 2020.DWG LAST PLOTTED 7/30/2021 12:32 PM

FOR CONSTRUCTION

CALL UTILITY NOTIFICATION CENTER OF COLORADO
811
CALL 2-BUSINESS DAYS IN ADVANCE BEFORE YOU DIG, GRADE, OR EXCAVATE FOR THE MARKING OF UNDERGROUND MEMBER UTILITIES

REVISIONS: NO.	DATE	REVISION DESCRIPTION:

BOULDER COUNTY PUBLIC WORKS
ENGINEERING DIVISION

DESIGNED:	CAD/C3D:	CHECKED:	DATE:
RL	RL	DW	07/30/2021

MORTON HEIGHTS–2021

CONCRETE DETAILS (1)

PROJECT NO: **RS-MOR-001** SHEET NO: **77**

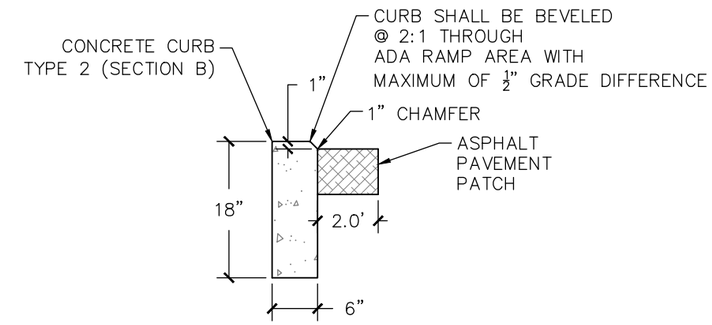

NOTES:

1. CURB DEPTH CAN BE REDUCED TO A MINIMUM OF 6" FOR SHORT DISTANCES, TO AVOID CONFLICT WITH SHALLOW STORM PIPE.

C1 CONCRETE CURB DETAIL

N.T.S.

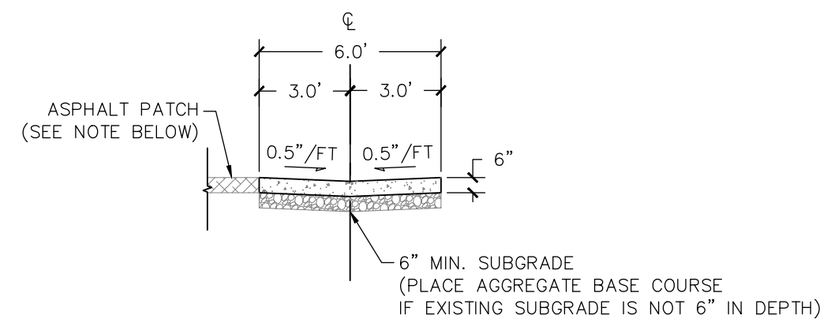

NOTES:

1. THICKNESS OF ASPHALT PATCH SHALL MATCH EXISTING OR 6" MINIMUM WHICHEVER IS THICKER.
2. DRAIN PAN REQUIRES FIBERMESH REINFORCEMENT AT MINIMUM 1.5 LBS PER CUBIC YARD.

C2 CONCRETE DRAIN PAN DETAIL

N.T.S.

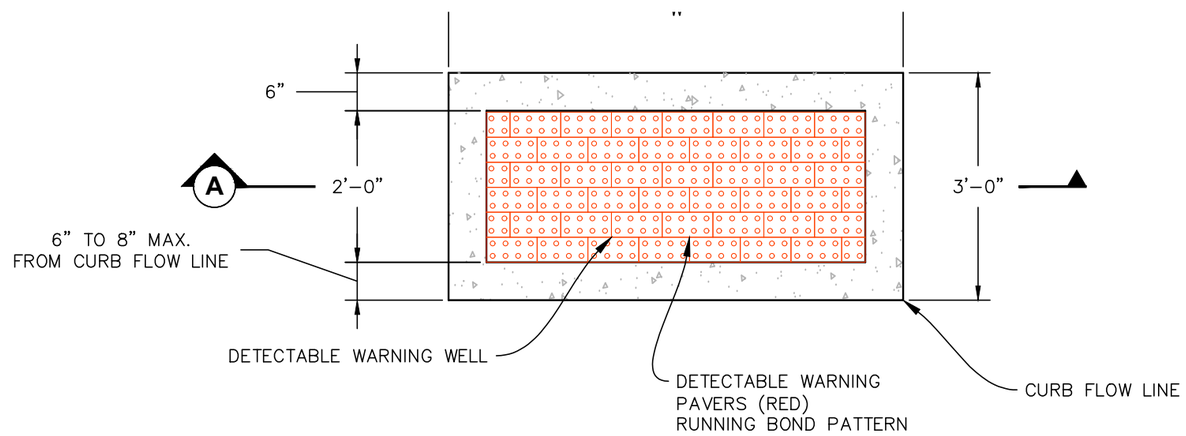

PLAN VIEW

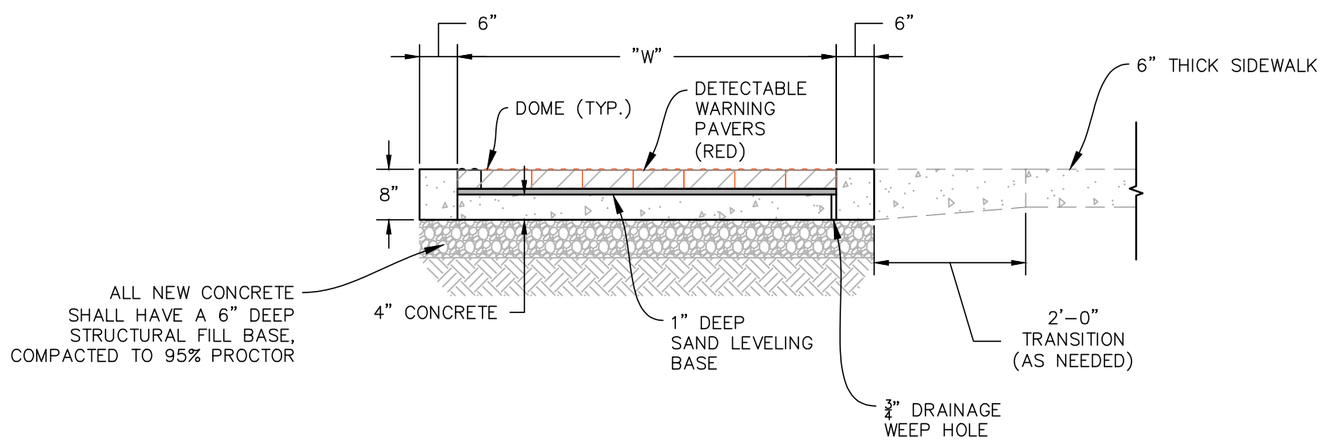

SECTION VIEW

NOTES:

"W" = 6'-0" (TYPICAL SIDEWALK WIDTH IN BOULDER COUNTY)
"W" = 8'-0" OR 10'-0" (TYPICAL MULTI-USE PATH WIDTH IN BOULDER COUNTY)

A CURB RAMP WITH DOME PAVER OPTION (ADA)

SCALE: 1"=2'

C:\AUTOCAD\PROJECTS\MORTON HEIGHTS\PLAN SET\MORTON-HEIGHTS-CONCRETE-DETAILS 14 JAN 2020.DWG LAST PLOTTED 7/30/2021 12:32 PM

FOR CONSTRUCTION

CALL UTILITY NOTIFICATION CENTER OF COLORADO
811
CALL 2-BUSINESS DAYS IN ADVANCE BEFORE YOU DIG, GRADE, OR EXCAVATE FOR THE MARKING OF UNDERGROUND MEMBER UTILITIES

REVISIONS:	NO.	DATE	REVISION DESCRIPTION:

BOULDER COUNTY PUBLIC WORKS
ENGINEERING DIVISION

DESIGNED:	CAD/C3D:	CHECKED:	DATE:
RL	RL	DW	07/30/2021

MORTON HEIGHTS-2021

ADA RAMP DETAIL

PROJECT NO: **RS-MOR-001** SHEET NO: **79**

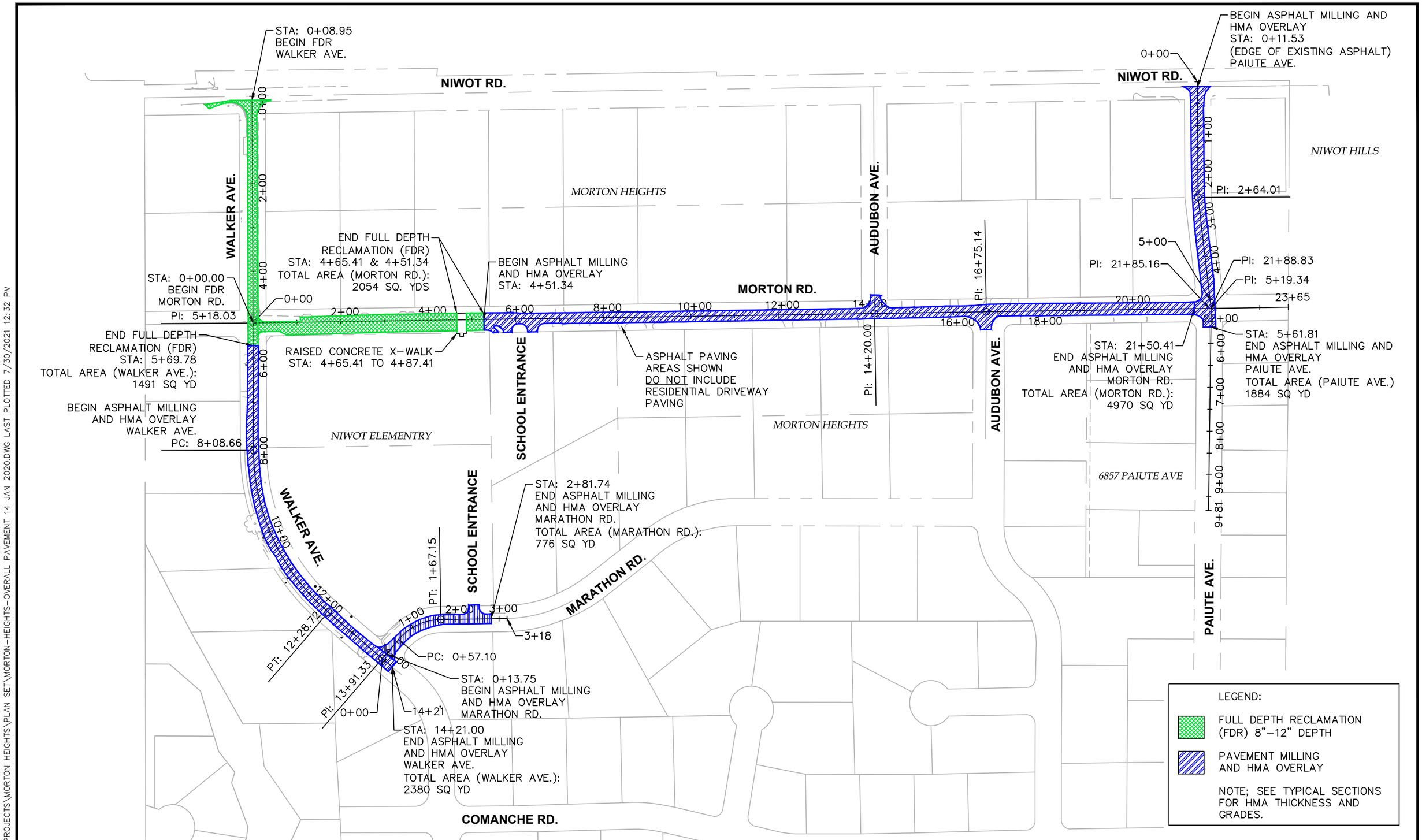

0 200 400
HORIZONTAL SCALE: 1"=200'

N

FOR CONSTRUCTION

CALL UTILITY NOTIFICATION CENTER OF COLORADO
811
CALL 2–BUSINESS DAYS IN ADVANCE BEFORE YOU DIG, GRADE, OR EXCAVATE FOR THE MARKING OF UNDERGROUND MEMBER UTILITIES

REVISIONS: NO.	DATE	REVISION DESCRIPTION:

BOULDER COUNTY PUBLIC WORKS
ENGINEERING DIVISION

DESIGNED:	CAD/C3D:	CHECKED:	DATE:
RL	RL	DW	07/30/2021

MORTON HEIGHTS–2021
OVERALL PAVING
PROJECT NO: **RS-MOR-001** SHEET NO: **80**

C:\AUTOCAD\PROJECTS\MORTON HEIGHTS\PLAN SET\MORTON-HEIGHTS-OVERALL PAVEMENT 14 JAN 2020.DWG LAST PLOTTED 7/30/2021 12:32 PM

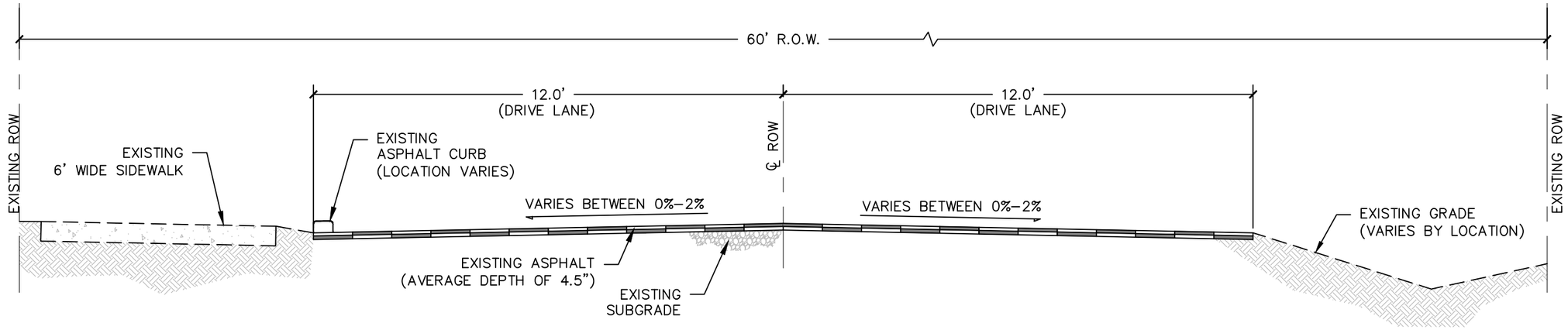

(A) EXISTING WALKER AVE.

(LOOKING SOUTH, NIWOT RD TO MORTON RD.)
SCALE: 1"=3'

0 3 6
HORIZONTAL SCALE: 1"=3'

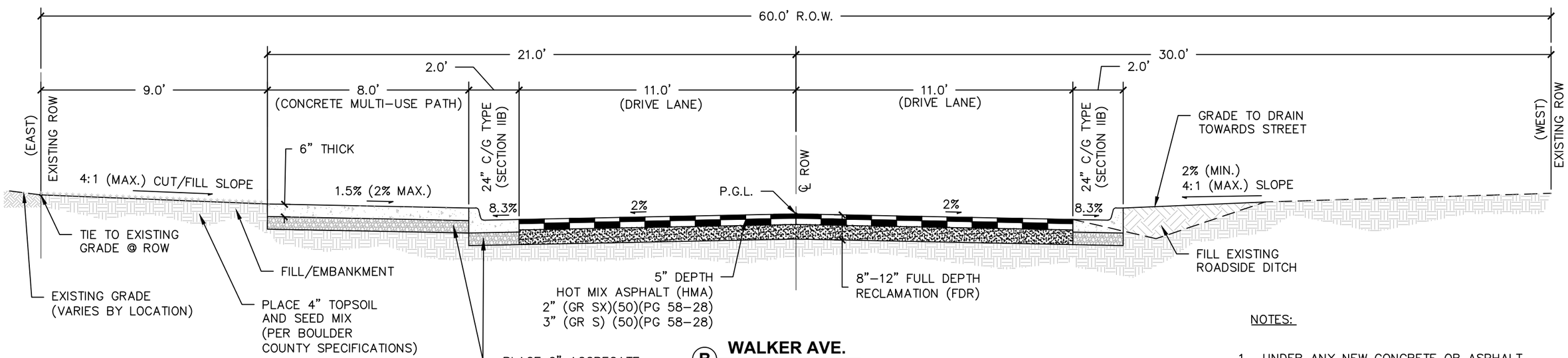

(B) WALKER AVE.

(LOOKING SOUTH)
SCALE: 1"=4'

STATIONS: 0+49.93 TO 0+76.59 NEW CURB/GUTTER BOTH SIDES OF ROAD

STATIONS: 0+76.59 TO 1+28.44
NEW CURB/GUTTER LEFT SIDE
CONCRETE DRIVEWAY CUT RIGHT SIDE

STATIONS: 1+28.44 TO 1+39.35
NEW CURB/GUTTER LEFT SIDE
CONCRETE DRIVEWAY CUT RIGHT SIDE

NOTES:

1. UNDER ANY NEW CONCRETE OR ASPHALT PATCHING, SUBGRADE SHOULD BE UNIFORM MATERIAL COMPACTED TO A MINIMUM 95% STANDARD PROCTOR DENSITY.

0 4 8
HORIZONTAL SCALE: 1"=4'

FOR CONSTRUCTION

CALL UTILITY NOTIFICATION CENTER OF COLORADO
811
CALL 2–BUSINESS DAYS IN ADVANCE BEFORE YOU DIG, GRADE, OR EXCAVATE FOR THE MARKING OF UNDERGROUND MEMBER UTILITIES

REVISIONS: NO.	DATE	REVISION DESCRIPTION:

BOULDER COUNTY PUBLIC WORKS
ENGINEERING DIVISION

DESIGNED:	CAD/C3D:	CHECKED:	DATE:
RL	RL	DW	07/30/2021

MORTON HEIGHTS–2021
TYPICAL SECTION-WALKER AVE (1)
PROJECT NO: **RS-MOR-001** SHEET NO: **81**

C:\AUTOCAD\PROJECTS\MORTON HEIGHTS\PLAN SET\MORTON-HEIGHTS-TYP-SECTIONS 29 DEC 2017.DWG LAST PLOTTED 7/30/2021 12:32 PM

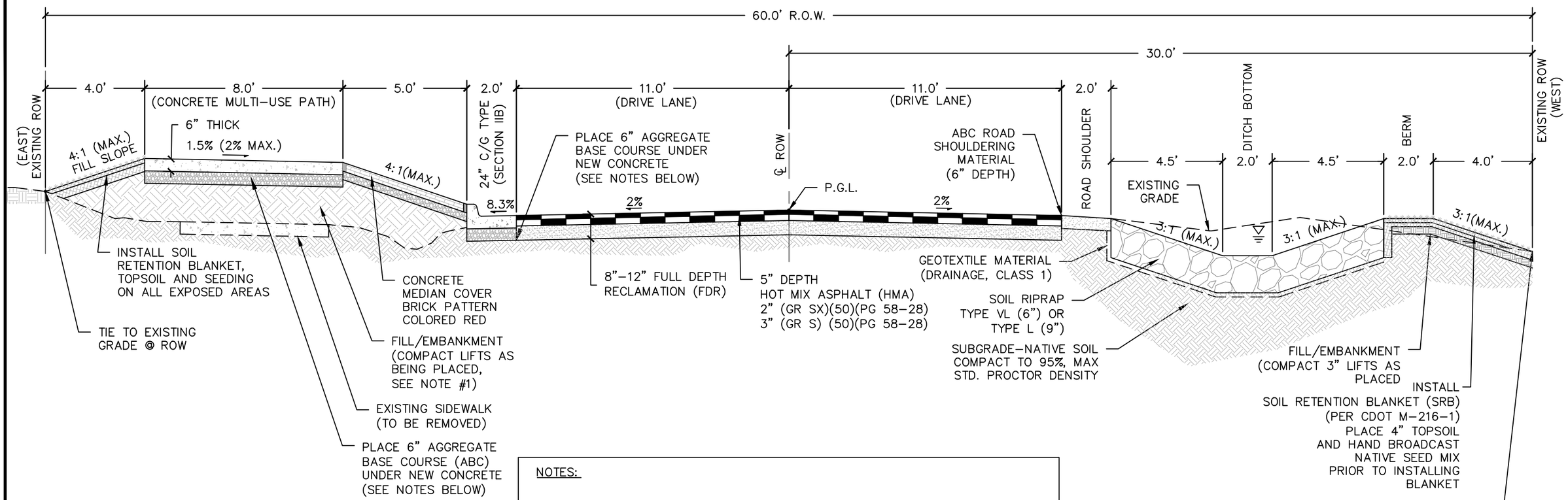

NOTES:

1. UNDER ANY NEW CONCRETE OR ASPHALT PATCHING, SUBGRADE SHOULD BE UNIFORM MATERIAL COMPACTED TO A MINIMUM 95% STANDARD PROCTOR DENSITY.
2. PER GEOTECH REPORT, 2017 OVERLAY PROGRAM, JOB NO 16-0032, BY GROUND ENGINEERING:

   EXISTING ASPHALT DEPTH OF WALKER AVE IS 7.5" FROM STATION 0+00 (SHOWN ON THESE PLANS) TO APPROXIMATELY STATION 1+50.

   EXISTING ASPHALT DEPTH OF WALKER AVE FROM STATION 1+50 TO 5+50 (+/-) IS 4.5".
3. SOIL RIPRAP DITCH LINING VARIES IN SIZE. SEE PROFILE VIEW FOR INFORMATION.
4. REFER TO THE STORMWATER MANAGEMENT PLAN FOR EROSION CONTROL BEST MANAGEMENT PRACTICES.

▽ = MAXIMUM WATER SURFACE ELEVATION FOR 5 YEAR STORM IS 10" IN DEPTH

(C) WALKER AVE.

(LOOKING SOUTH)
SCALE: 1"=4'
STATIONS: 1+39.35 TO 4+60.00

0 4 8
HORIZONTAL SCALE: 1"=4'

FOR CONSTRUCTION

CALL UTILITY NOTIFICATION CENTER OF COLORADO
811
CALL 2-BUSINESS DAYS IN ADVANCE BEFORE YOU DIG, GRADE, OR EXCAVATE FOR THE MARKING OF UNDERGROUND MEMBER UTILITIES

REVISIONS: NO.	DATE	REVISION DESCRIPTION:

BOULDER COUNTY PUBLIC WORKS
ENGINEERING DIVISION

DESIGNED:	CAD/C3D:	CHECKED:	DATE:
RL	RL	DW	07/30/2021

MORTON HEIGHTS-2021
TYPICAL SECTION-WALKER AVE (2)
PROJECT NO: RS-MOR-001 SHEET NO: 82

C:\AUTOCAD\PROJECTS\MORTON HEIGHTS\PLAN SET\MORTON-HEIGHTS-TYP-SECTIONS 29 DEC 2017.DWG LAST PLOTTED 7/30/2021 12:32 PM

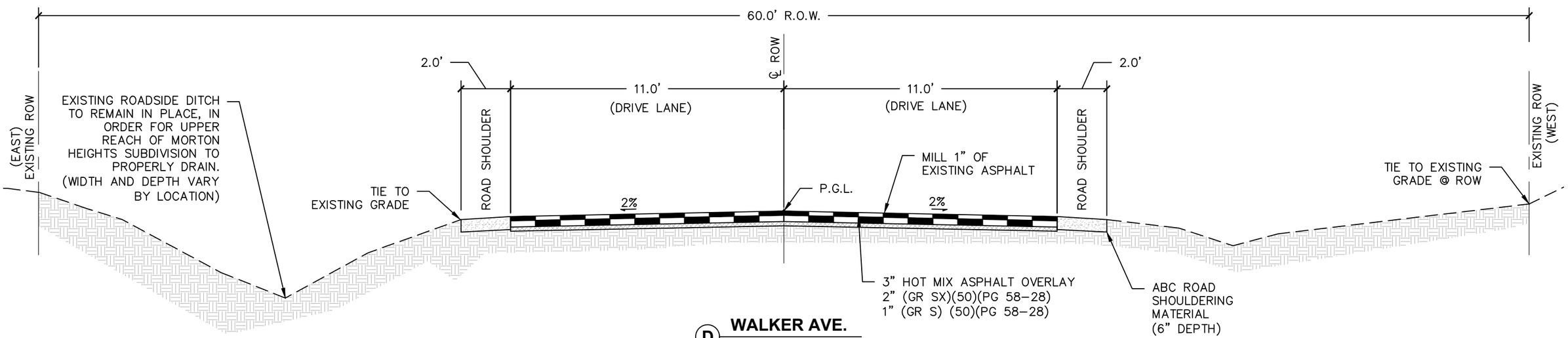

D **WALKER AVE.**

(LOOKING SOUTH)
SCALE: 1"=4'
STATIONS: 5+69.78 TO 14+21.00

0 4 8
HORIZONTAL SCALE: 1"=4'

FOR CONSTRUCTION

CALL UTILITY NOTIFICATION CENTER OF COLORADO
811
CALL 2-BUSINESS DAYS IN ADVANCE BEFORE YOU DIG, GRADE, OR EXCAVATE FOR THE MARKING OF UNDERGROUND MEMBER UTILITIES

REVISIONS: NO.	DATE	REVISION DESCRIPTION:

BOULDER COUNTY PUBLIC WORKS
ENGINEERING DIVISION

DESIGNED:	CAD/C3D:	CHECKED:	DATE:
RL	RL	DW	07/30/2021

MORTON HEIGHTS-2021
TYPICAL SECTION-WALKER AVE (3)
PROJECT NO: **RS-MOR-001** SHEET NO: **83**

C:\AUTOCAD\PROJECTS\MORTON HEIGHTS\PLAN SET\MORTON-HEIGHTS-TYP-SECTIONS 29 DEC 2017.DWG LAST PLOTTED 7/30/2021 12:33 PM

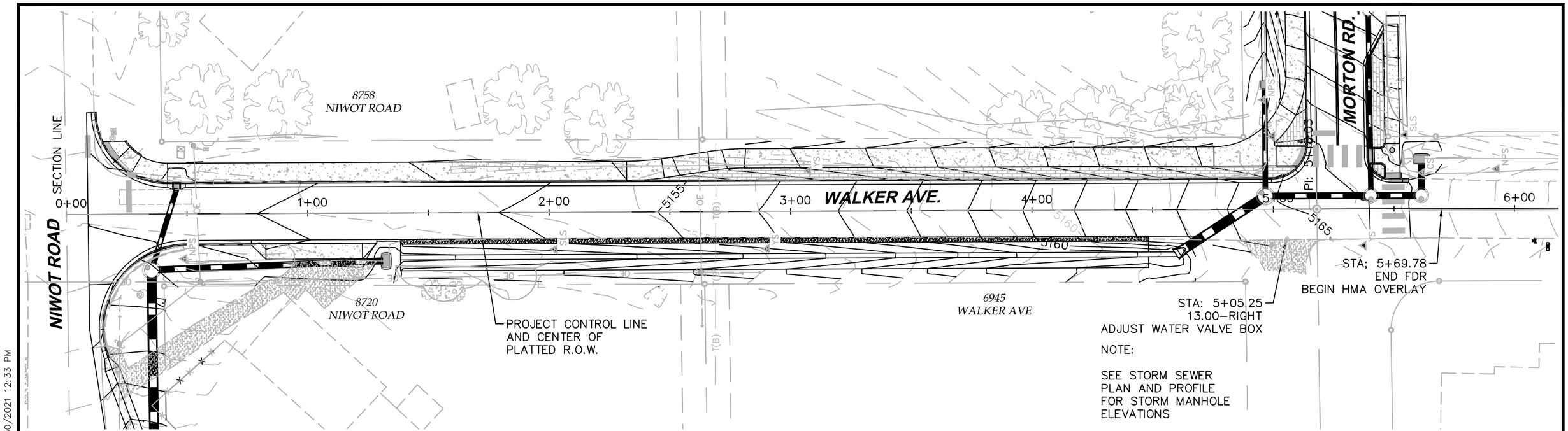

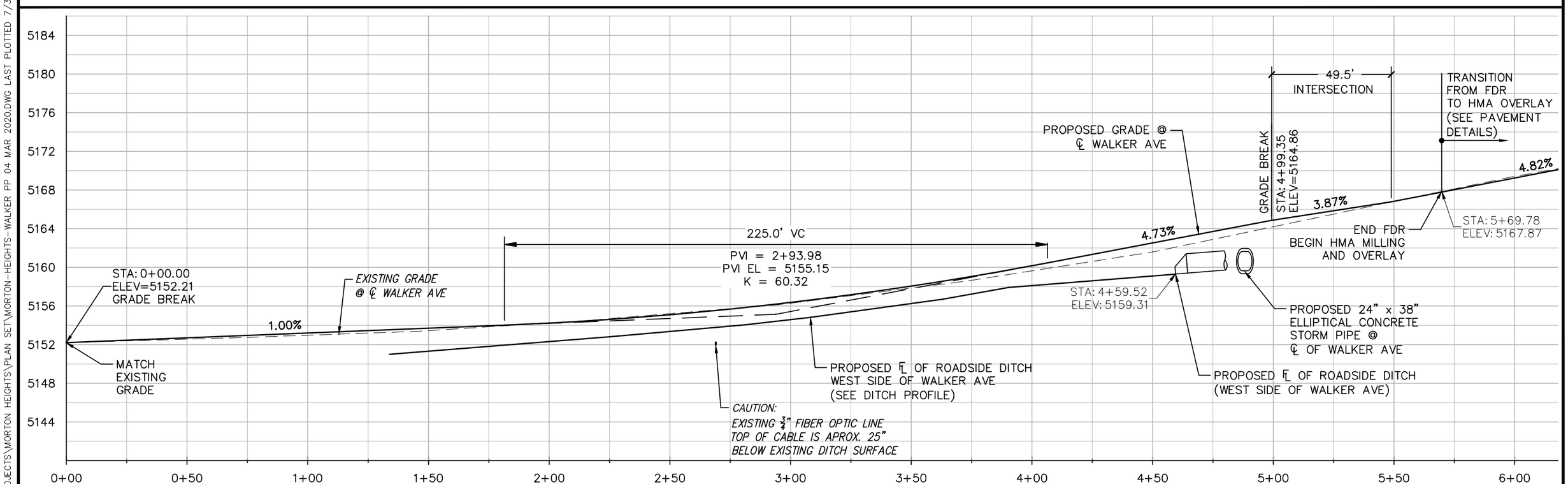

0 40 80

HORIZONTAL SCALE: 1"=40'
VERTICAL SCALE: 1"=10'

FOR CONSTRUCTION

CALL UTILITY NOTIFICATION CENTER OF COLORADO
811
CALL 2-BUSINESS DAYS IN ADVANCE BEFORE YOU DIG, GRADE, OR EXCAVATE FOR THE MARKING OF UNDERGROUND MEMBER UTILITIES

REVISIONS: NO.	DATE	REVISION DESCRIPTION:

BOULDER COUNTY PUBLIC WORKS
ENGINEERING DIVISION

DESIGNED:	CAD/C3D:	CHECKED:	DATE:
RL	RL	DW	07/30/2021

MORTON HEIGHTS-2021

WALKER AVE-PLAN AND PROFILE

PROJECT NO: **RS-MOR-001** SHEET NO: **84**

C:\AUTOCAD\PROJECTS\MORTON HEIGHTS\PLAN SET\MORTON-HEIGHTS-WALKER PP 04 MAR 2020.DWG LAST PLOTTED 7/30/2021 12:33 PM

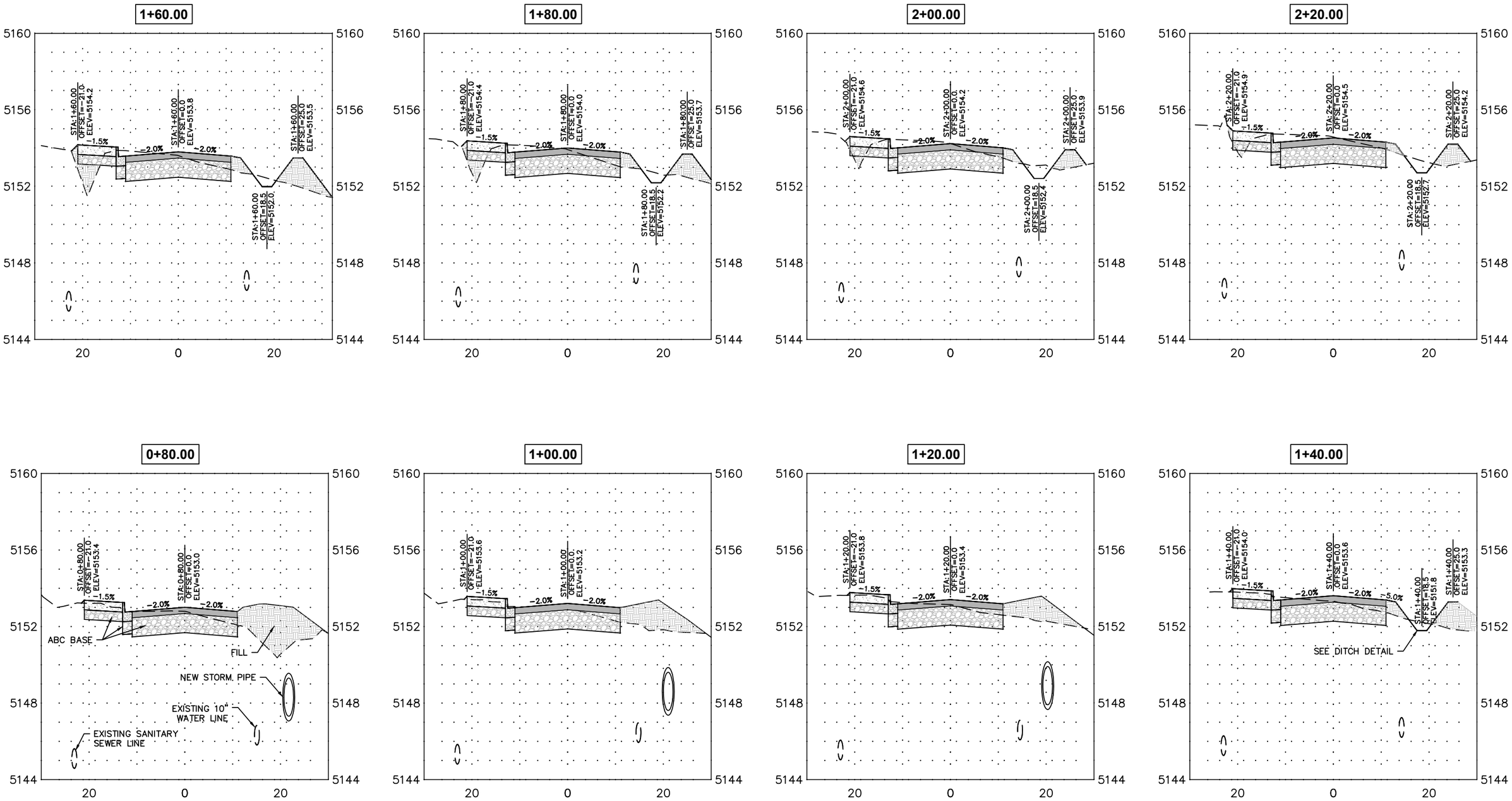

0 20 40

HORIZONTAL SCALE: 1"=20'
VERTICAL SCALE:1"=5'

FOR CONSTRUCTION

CALL UTILITY NOTIFICATION CENTER OF COLORADO

811

CALL 2-BUSINESS DAYS IN ADVANCE BEFORE YOU DIG, GRADE, OR EXCAVATE FOR THE MARKING OF UNDERGROUND MEMBER UTILITIES

REVISIONS: NO.	DATE	REVISION DESCRIPTION:

BOULDER COUNTY PUBLIC WORKS
ENGINEERING DIVISION

DESIGNED:	CAD/C3D:	CHECKED:	DATE:
RL	RL	DW	07/30/2021

MORTON HEIGHTS-2021

CROSS SECTIONS-WALKER AVE (1)

PROJECT NO: **RS-MOR-001** SHEET NO: **85**

C:\AUTOCAD\PROJECTS\MORTON HEIGHTS\PLAN SET\MORTON-HEIGHTS-WALKER SECTIONS 22 FEB 2019.DWG LAST PLOTTED 7/30/2021 12:35 PM

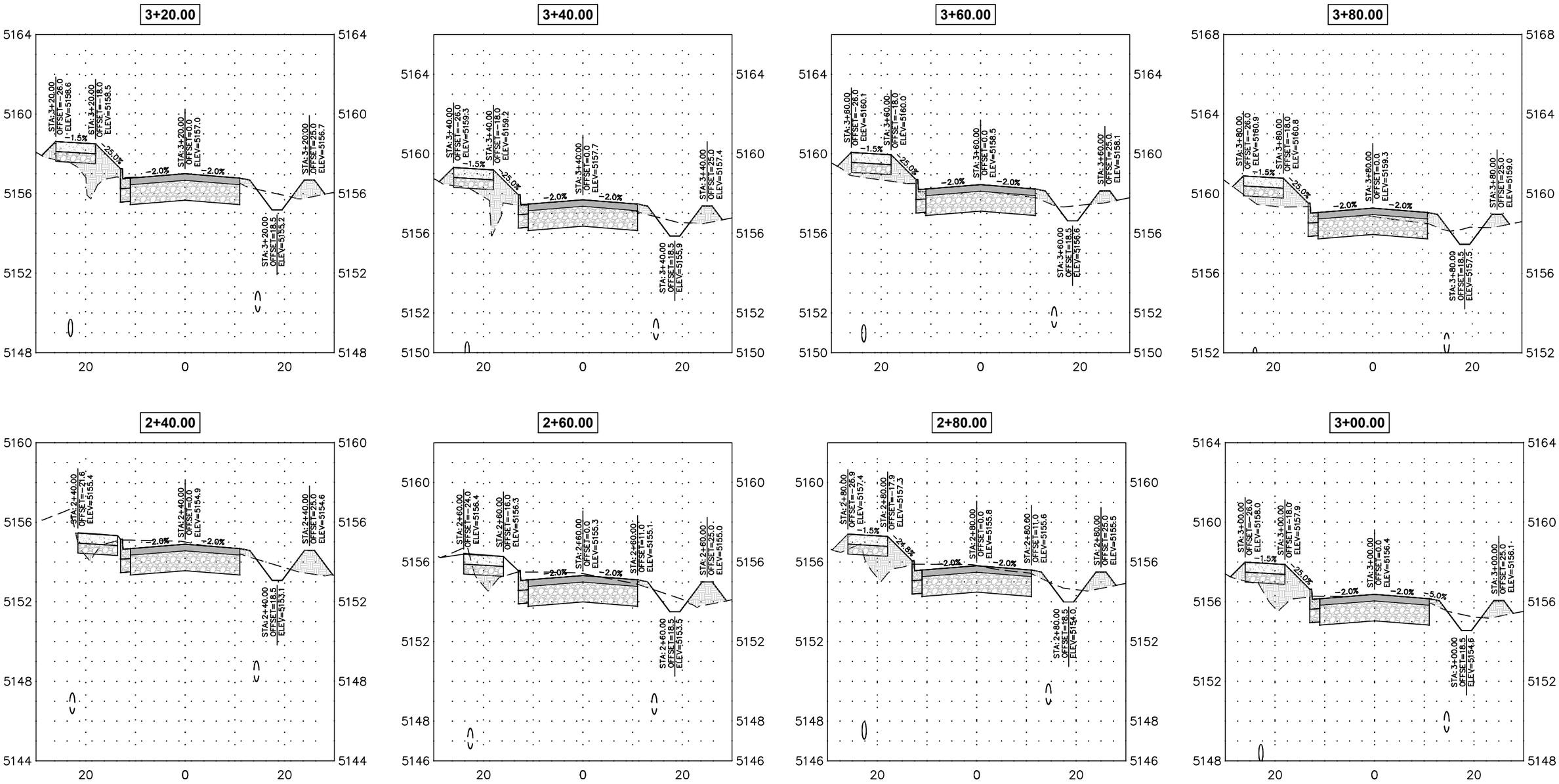

0 20 40

HORIZONTAL SCALE: 1"=20'
VERTICAL SCALE:1"=5'

FOR CONSTRUCTION

CALL UTILITY NOTIFICATION CENTER OF COLORADO
811
CALL 2-BUSINESS DAYS IN ADVANCE BEFORE YOU DIG, GRADE, OR EXCAVATE FOR THE MARKING OF UNDERGROUND MEMBER UTILITIES

REVISIONS:	NO.	DATE	REVISION DESCRIPTION:

BOULDER COUNTY PUBLIC WORKS
ENGINEERING DIVISION

DESIGNED:	CAD/C3D:	CHECKED:	DATE:
RL	RL	DW	07/30/2021

MORTON HEIGHTS-2021

CROSS SECTIONS-WALKER AVE (2)

PROJECT NO: **RS-MOR-001** SHEET NO: **86**

C:\AUTOCAD\PROJECTS\MORTON HEIGHTS\PLAN SET\MORTON-HEIGHTS-WALKER SECTIONS 22 FEB 2019.DWG LAST PLOTTED 7/30/2021 12:36 PM

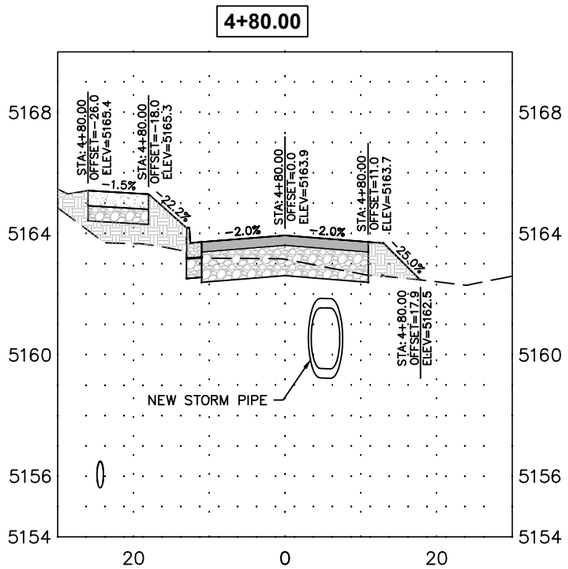

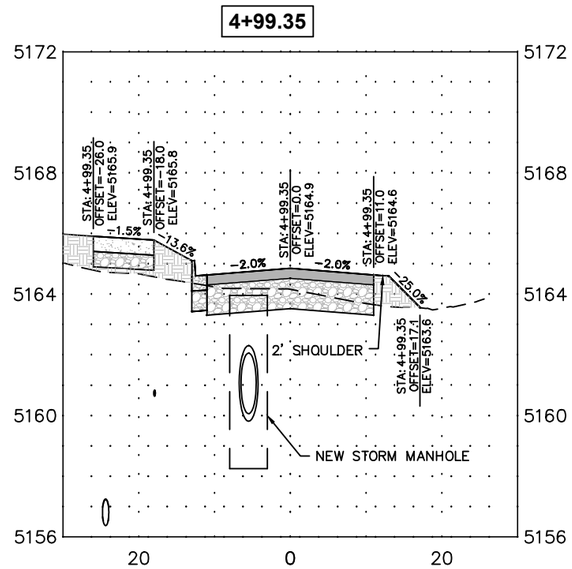

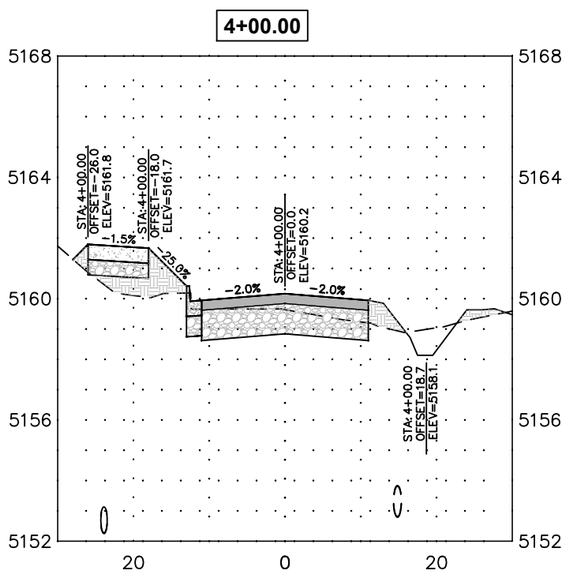

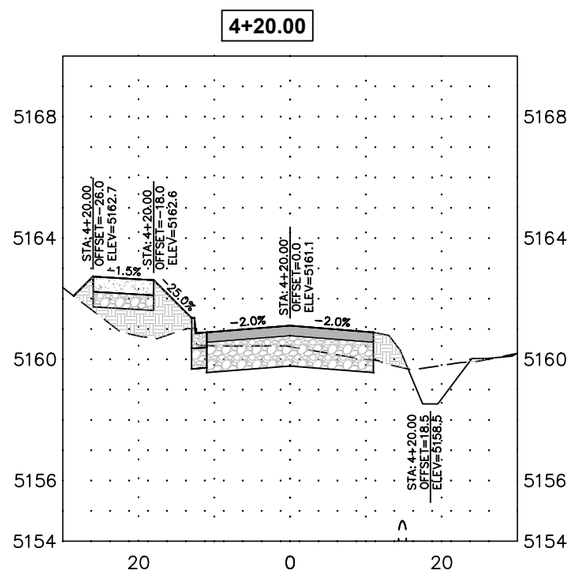

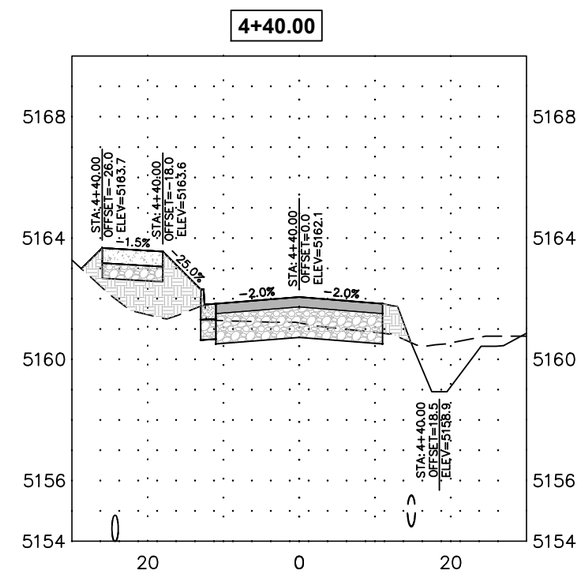

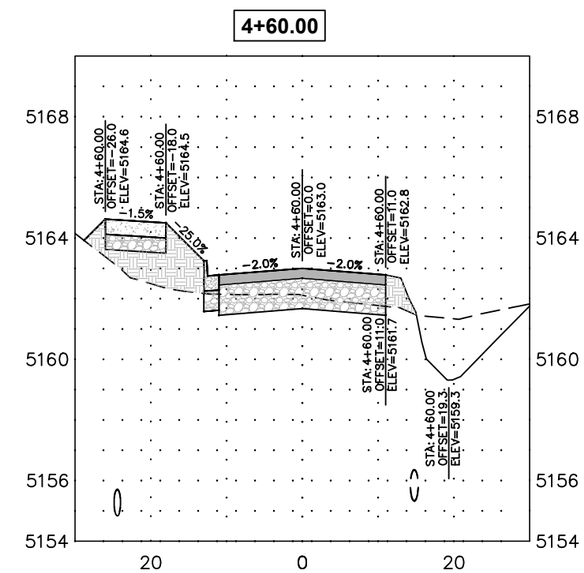

0 20 40

HORIZONTAL SCALE: 1"=20'
VERTICAL SCALE:1"=5'

FOR CONSTRUCTION

CALL UTILITY NOTIFICATION CENTER OF COLORADO

811

CALL 2-BUSINESS DAYS IN ADVANCE BEFORE YOU DIG, GRADE, OR EXCAVATE FOR THE MARKING OF UNDERGROUND MEMBER UTILITIES

REVISIONS:	NO.	DATE	REVISION DESCRIPTION:

BOULDER COUNTY PUBLIC WORKS
ENGINEERING DIVISION

DESIGNED:	CAD/C3D:	CHECKED:	DATE:
RL	RL	DW	07/30/2021

MORTON HEIGHTS-2021

CROSS SECTIONS-WALKER AVE (3)

PROJECT NO: **RS-MOR-001** SHEET NO: **87**

C:\AUTOCAD\PROJECTS\MORTON HEIGHTS\PLAN SET\MORTON-HEIGHTS-WALKER SECTIONS 22 FEB 2019.DWG LAST PLOTTED 7/30/2021 12:36 PM

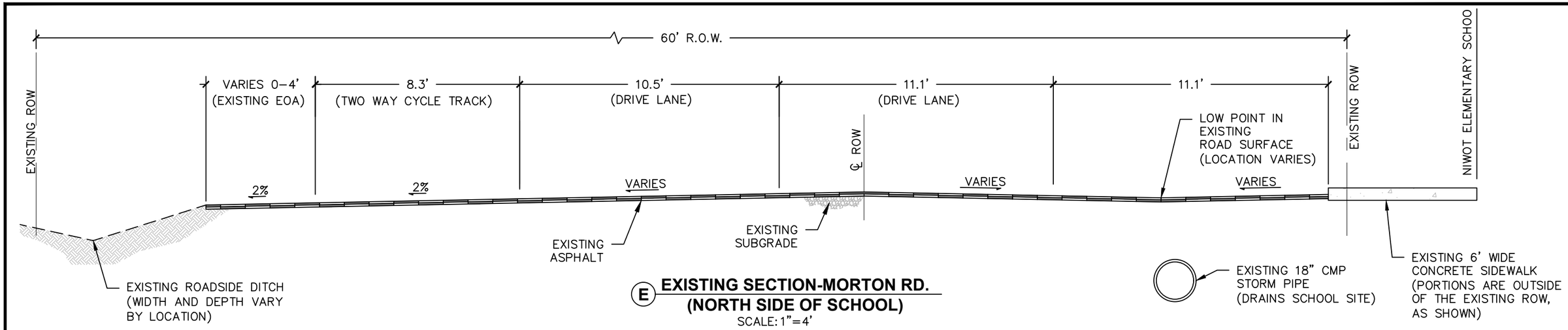

(E) EXISTING SECTION-MORTON RD.
(NORTH SIDE OF SCHOOL)
SCALE: 1"=4'

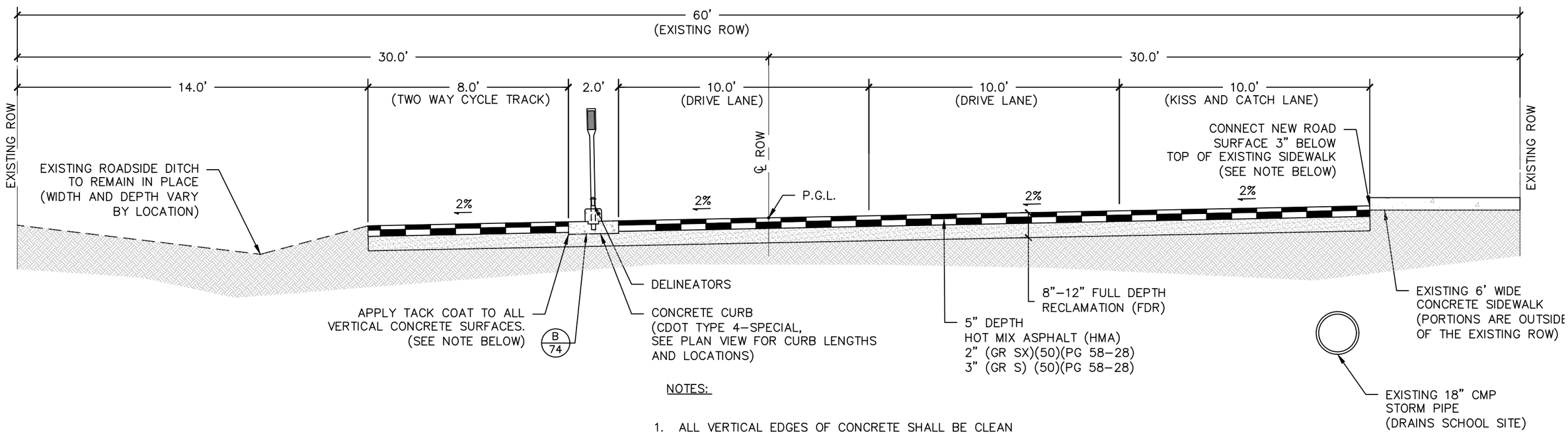

NOTES:

1. ALL VERTICAL EDGES OF CONCRETE SHALL BE CLEAN AND DRY PRIOR TO PLACEMENT OF ASPHALT TACK COAT.
2. 10' WIDE LANES ON MORTON ROAD ARE PER BOULDER COUNTY DESIGN EXCEPTION.

(F) MORTON RD.
SCALE: 1"=4'
STATIONS: 0+00.00 TO 4+65.41

0 4 8
HORIZONTAL SCALE: 1"=4'

0 4 8
HORIZONTAL SCALE: 1"=4'

FOR CONSTRUCTION

CALL UTILITY NOTIFICATION CENTER OF COLORADO
811
CALL 2–BUSINESS DAYS IN ADVANCE BEFORE YOU DIG, GRADE, OR EXCAVATE FOR THE MARKING OF UNDERGROUND MEMBER UTILITIES

REVISIONS:	NO.	DATE	REVISION DESCRIPTION:

BOULDER COUNTY PUBLIC WORKS
ENGINEERING DIVISION

DESIGNED:	CAD/C3D:	CHECKED:	DATE:
RL	RL	DW	07/30/2021

MORTON HEIGHTS–2021
TYPICAL SECTION-MORTON RD (1)
PROJECT NO: **RS-MOR-001** SHEET NO: **88**

C:\AUTOCAD\PROJECTS\MORTON HEIGHTS\PLAN SET\MORTON-HEIGHTS-TYP-SECTIONS 29 DEC 2017.DWG LAST PLOTTED 7/30/2021 12:36 PM

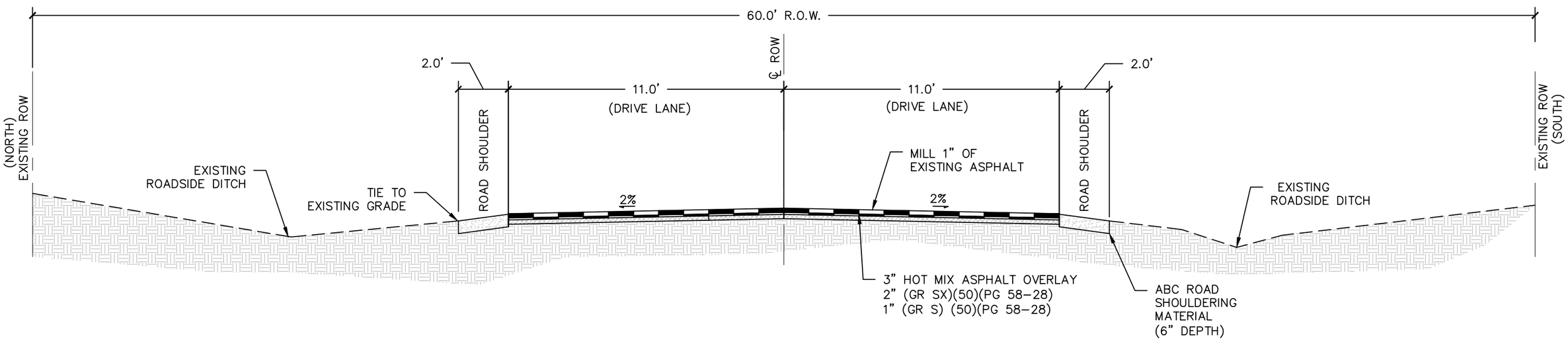

G MORTON RD.

(LOOKING EAST)
SCALE: 1"=4'
STATIONS: 4+87.41 TO 21+50.41

0 4 8
HORIZONTAL SCALE: 1"=4'

FOR CONSTRUCTION

CALL UTILITY NOTIFICATION CENTER OF COLORADO
811
CALL 2-BUSINESS DAYS IN ADVANCE BEFORE YOU DIG, GRADE, OR EXCAVATE FOR THE MARKING OF UNDERGROUND MEMBER UTILITIES

REVISIONS:	NO.	DATE	REVISION DESCRIPTION:

BOULDER COUNTY PUBLIC WORKS
ENGINEERING DIVISION

DESIGNED:	CAD/C3D:	CHECKED:	DATE:
RL	RL	DW	07/30/2021

MORTON HEIGHTS-2021
TYPICAL SECTION-MORTON RD (2)
PROJECT NO: **RS-MOR-001** SHEET NO: **89**

C:\AUTOCAD\PROJECTS\MORTON HEIGHTS\PLAN SET\MORTON-HEIGHTS-TYP-SECTIONS 29 DEC 2017.DWG LAST PLOTTED 7/30/2021 12:36 PM

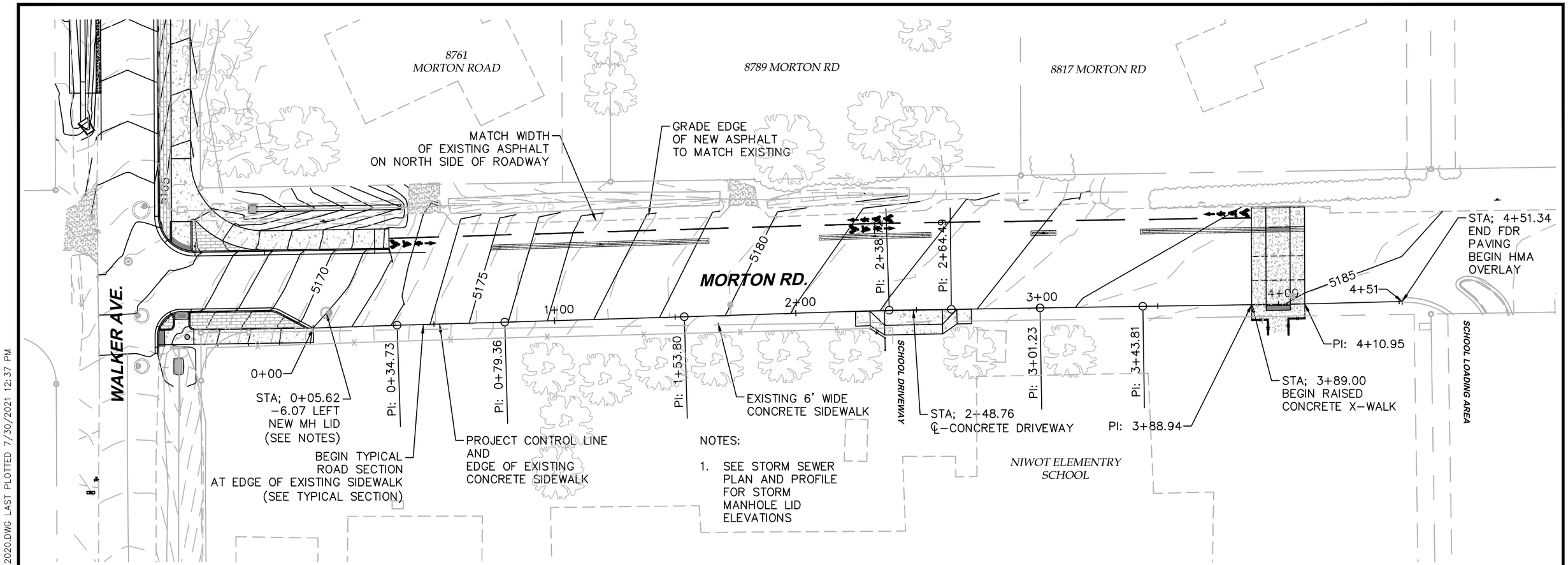

NOTES:

1. SEE STORM SEWER PLAN AND PROFILE FOR STORM MANHOLE LID ELEVATIONS

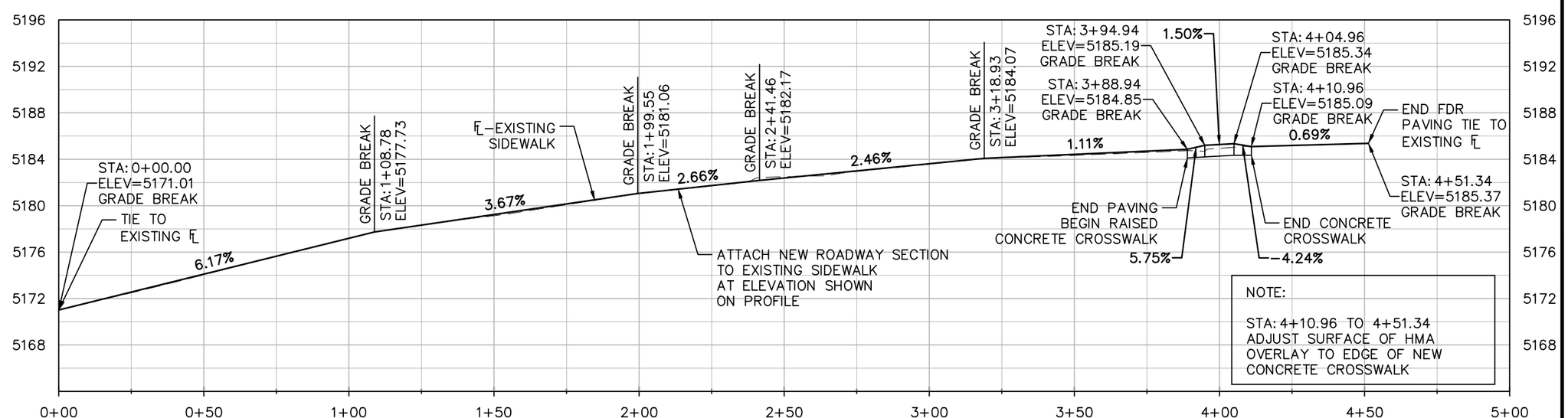

NOTE:

STA: 4+10.96 TO 4+51.34
ADJUST SURFACE OF HMA
OVERLAY TO EDGE OF NEW
CONCRETE CROSSWALK

0 40 80

HORIZONTAL SCALE: 1"=40'
VERTICAL SCALE: 1"=10'

N

FOR CONSTRUCTION

CALL UTILITY NOTIFICATION CENTER OF COLORADO
811
CALL 2-BUSINESS DAYS IN ADVANCE BEFORE YOU DIG, GRADE, OR EXCAVATE FOR THE MARKING OF UNDERGROUND MEMBER UTILITIES

REVISIONS:	NO.	DATE	REVISION DESCRIPTION:

BOULDER COUNTY PUBLIC WORKS
ENGINEERING DIVISION

DESIGNED:	CAD/C3D:	CHECKED:	DATE:
RL	RL	DW	07/30/2021

MORTON HEIGHTS-2021

MORTON RD-PLAN AND PROFILE

PROJECT NO: **RS-MOR-001** SHEET NO: **90**

C:\AUTOCAD\PROJECTS\MORTON HEIGHTS\PLAN SET\MORTON-HEIGHTS-MORTON PP 04 MAR 2020.DWG LAST PLOTTED 7/30/2021 12:37 PM

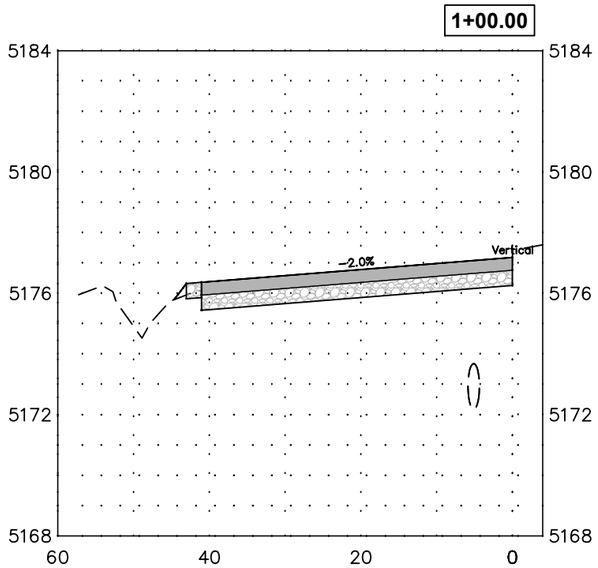

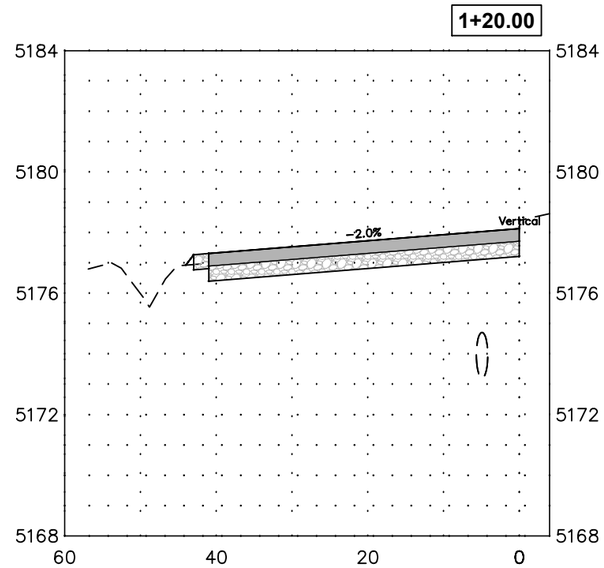

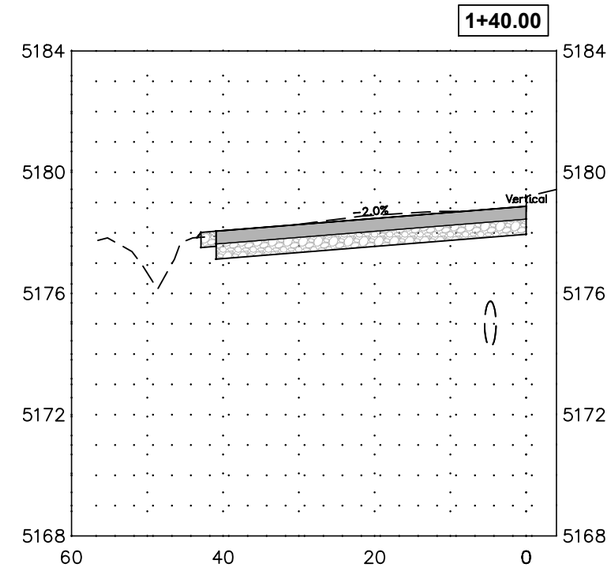

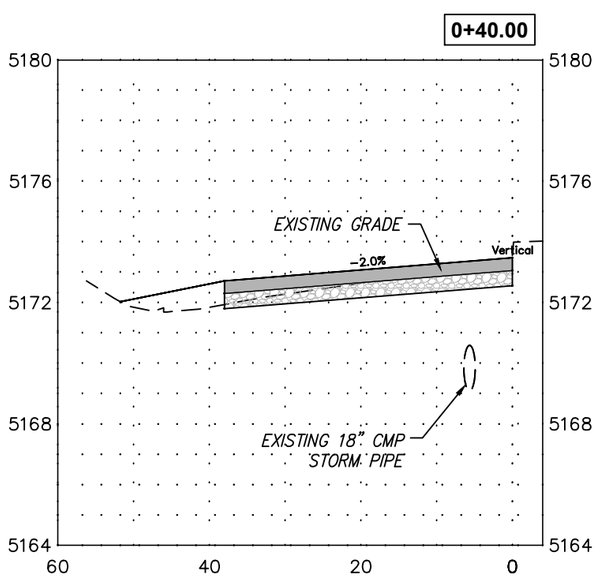

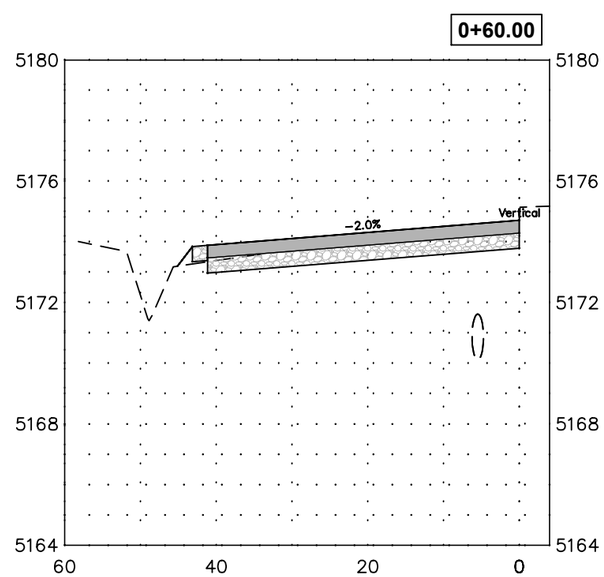

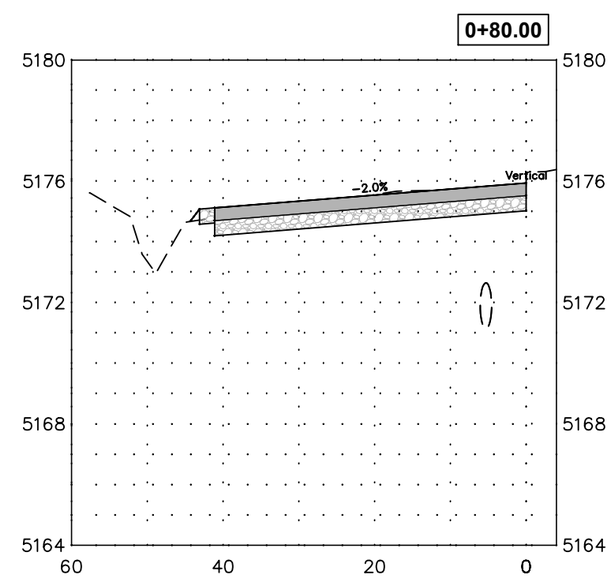

0 20 40

HORIZONTAL SCALE: 1"=20'
VERTICAL SCALE:1"=5'

FOR CONSTRUCTION

CALL UTILITY NOTIFICATION CENTER OF COLORADO
811
CALL 2-BUSINESS DAYS IN ADVANCE BEFORE YOU DIG, GRADE, OR EXCAVATE FOR THE MARKING OF UNDERGROUND MEMBER UTILITIES

REVISIONS:	NO.	DATE	REVISION DESCRIPTION:

BOULDER COUNTY PUBLIC WORKS
ENGINEERING DIVISION

DESIGNED:	CAD/C3D:	CHECKED:	DATE:
RL	RL	DW	07/30/2021

MORTON HEIGHTS-2021

CROSS SECTIONS-MORTON RD (1)

PROJECT NO: **RS-MOR-001** SHEET NO: **91**

C:\AUTOCAD\PROJECTS\MORTON HEIGHTS\PLAN SET\MORTON-HEIGHTS-MORTON SECTIONS 04 MAR 2020.DWG LAST PLOTTED 7/30/2021 12:38 PM

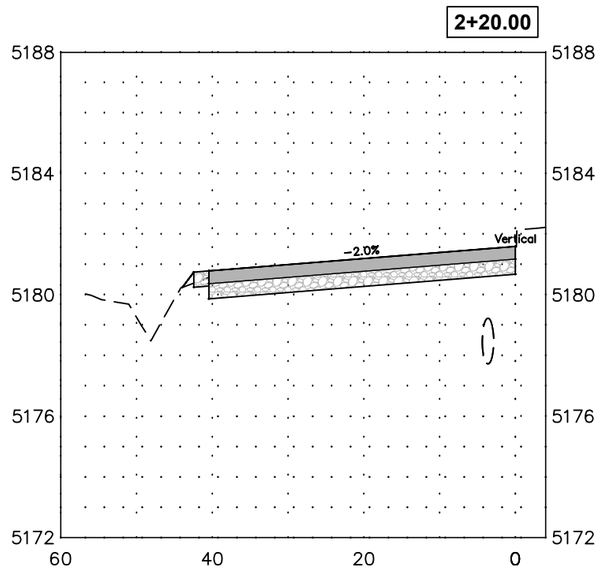

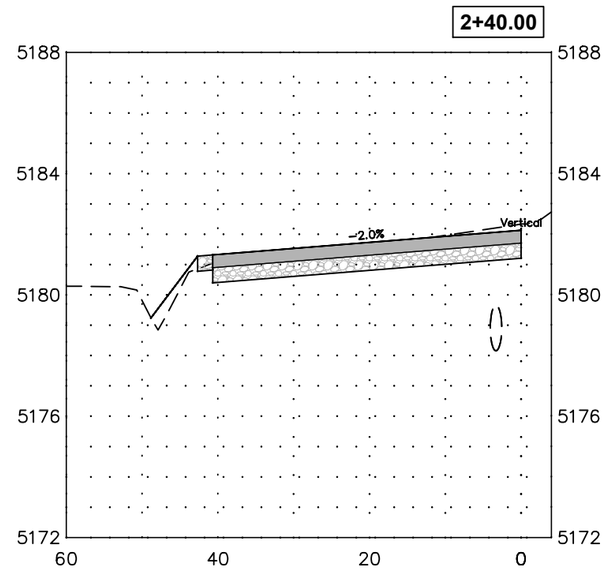

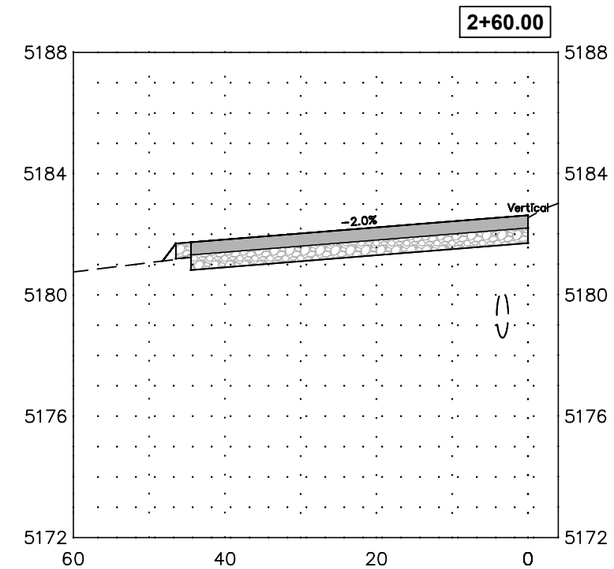

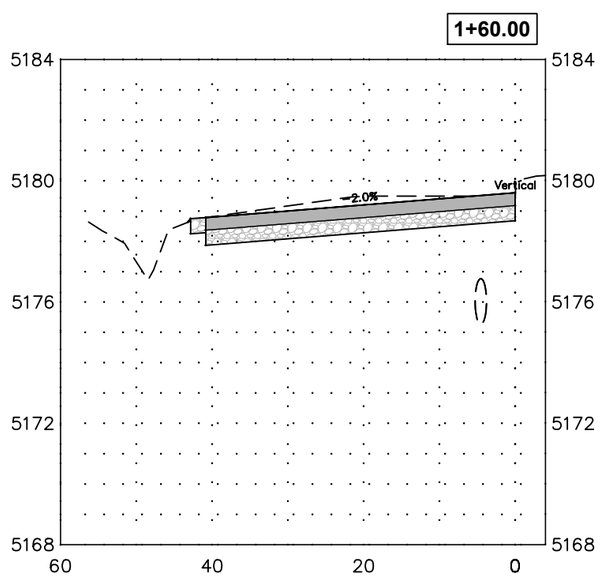

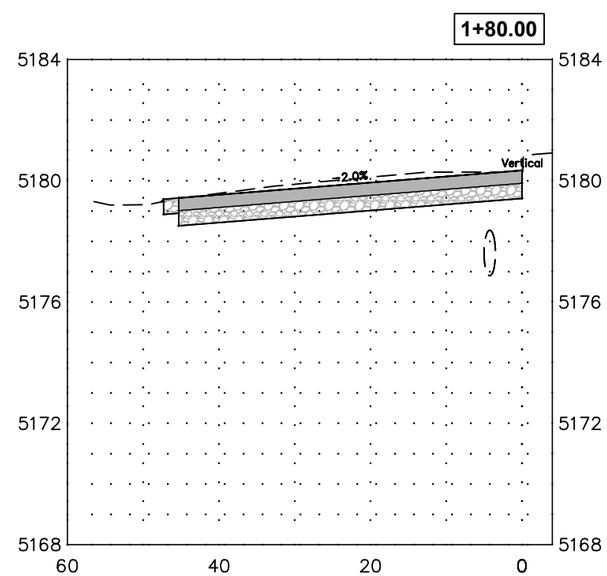

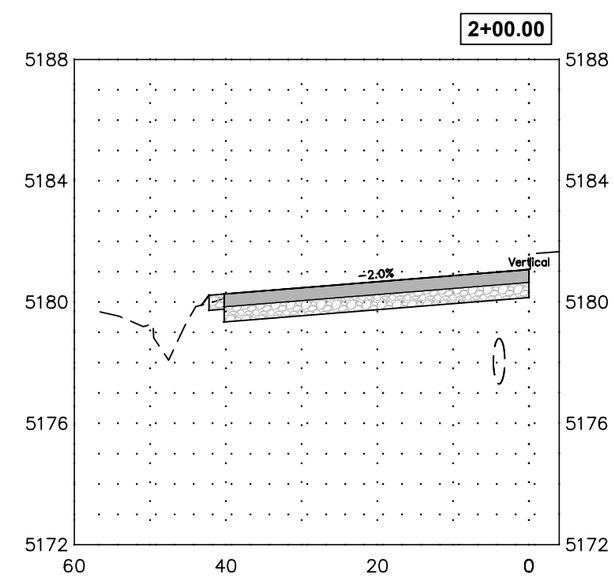

0 20 40

HORIZONTAL SCALE: 1"=20'
VERTICAL SCALE:1"=5'

FOR CONSTRUCTION

CALL UTILITY NOTIFICATION CENTER OF COLORADO
811
CALL 2-BUSINESS DAYS IN ADVANCE BEFORE YOU DIG, GRADE, OR EXCAVATE FOR THE MARKING OF UNDERGROUND MEMBER UTILITIES

REVISIONS: NO.	DATE	REVISION DESCRIPTION:

BOULDER COUNTY PUBLIC WORKS
ENGINEERING DIVISION

DESIGNED:	CAD/C3D:	CHECKED:	DATE:
RL	RL	DW	07/30/2021

MORTON HEIGHTS-2021

CROSS SECTIONS-MORTON RD (2)

PROJECT NO: **RS-MOR-001** SHEET NO: **92**

C:\AUTOCAD\PROJECTS\MORTON HEIGHTS\PLAN SET\MORTON-HEIGHTS-MORTON SECTIONS 04 MAR 2020.DWG LAST PLOTTED 7/30/2021 12:39 PM

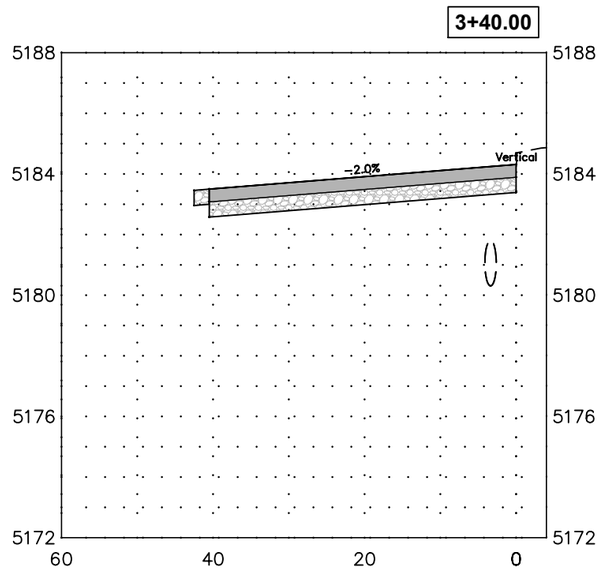

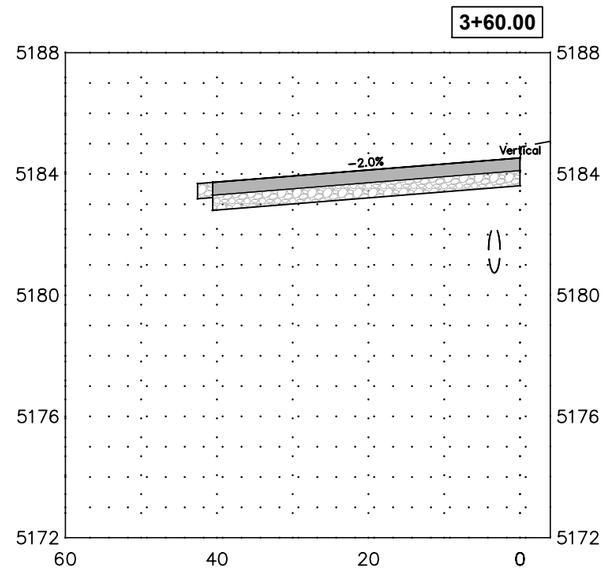

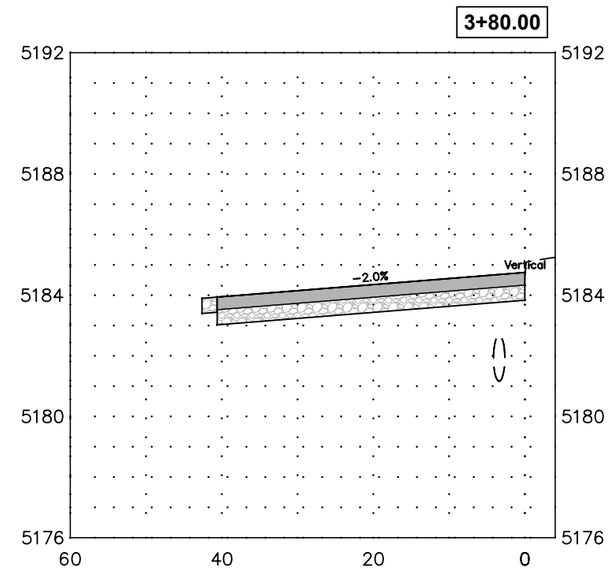

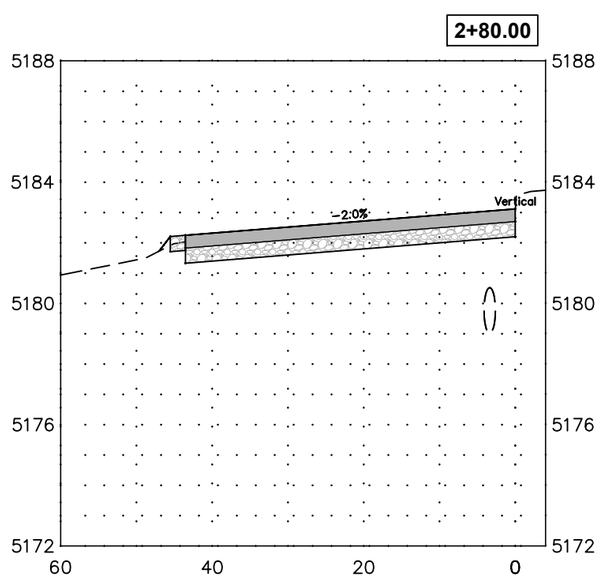

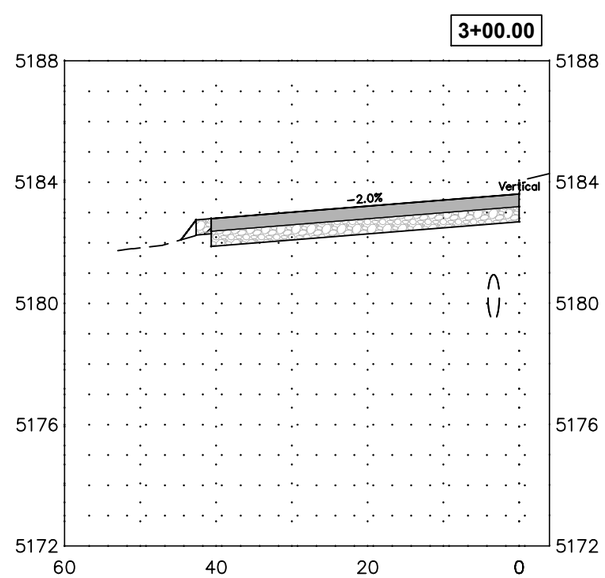

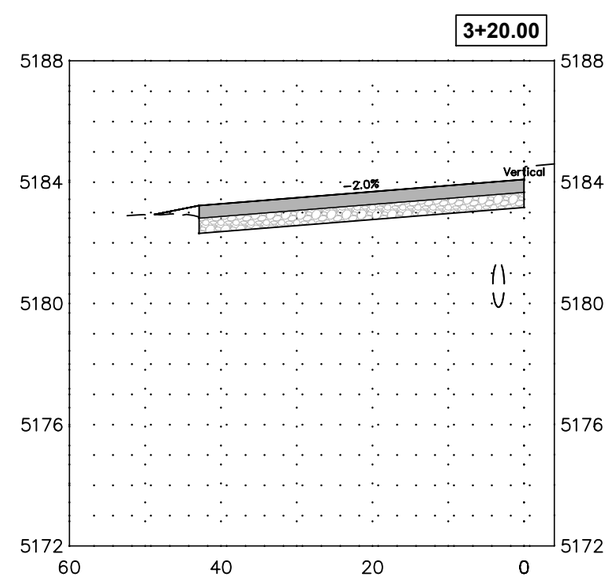

0 20 40

HORIZONTAL SCALE: 1"=20'
VERTICAL SCALE:1"=5'

FOR CONSTRUCTION

CALL UTILITY NOTIFICATION CENTER OF COLORADO
811
CALL 2-BUSINESS DAYS IN ADVANCE BEFORE YOU DIG, GRADE, OR EXCAVATE FOR THE MARKING OF UNDERGROUND MEMBER UTILITIES

REVISIONS:	NO.	DATE	REVISION DESCRIPTION:

BOULDER COUNTY PUBLIC WORKS
ENGINEERING DIVISION

DESIGNED:	CAD/C3D:	CHECKED:	DATE:
RL	RL	DW	07/30/2021

MORTON HEIGHTS-2021

CROSS SECTIONS-MORTON RD (3)

PROJECT NO: **RS-MOR-001** SHEET NO: **93**

C:\AUTOCAD\PROJECTS\MORTON HEIGHTS\PLAN SET\MORTON-HEIGHTS-MORTON SECTIONS 04 MAR 2020.DWG LAST PLOTTED 7/30/2021 12:40 PM

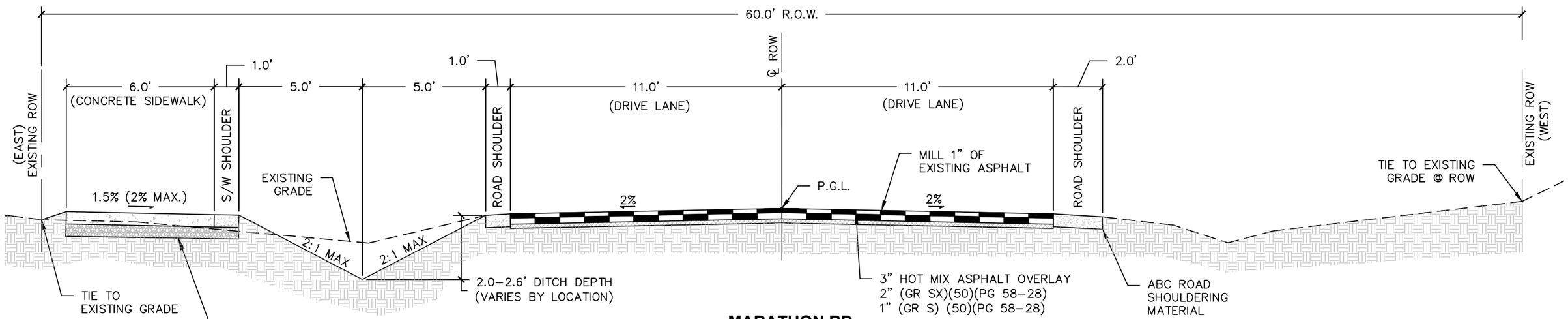

MARATHON RD.

(LOOKING EAST)
SCALE: 1"=4'
STATIONS: 0+57.10 TO 2+07.90

0 4 8
HORIZONTAL SCALE: 1"=4'

FOR CONSTRUCTION

CALL UTILITY NOTIFICATION CENTER OF COLORADO
811
CALL 2–BUSINESS DAYS IN ADVANCE BEFORE YOU DIG, GRADE, OR EXCAVATE FOR THE MARKING OF UNDERGROUND MEMBER UTILITIES

REVISIONS:	NO.	DATE	REVISION DESCRIPTION:

BOULDER COUNTY PUBLIC WORKS
ENGINEERING DIVISION

DESIGNED:	CAD/C3D:	CHECKED:	DATE:
RL	RL	DW	07/30/2021

MORTON HEIGHTS–2021

TYPICAL SECTION-MARATHON RD

PROJECT NO: **RS-MOR-001** SHEET NO: **94**

C:\AUTOCAD\PROJECTS\MORTON HEIGHTS\PLAN SET\MORTON-HEIGHTS-TYP-SECTIONS 29 DEC 2017.DWG LAST PLOTTED 7/30/2021 12:40 PM

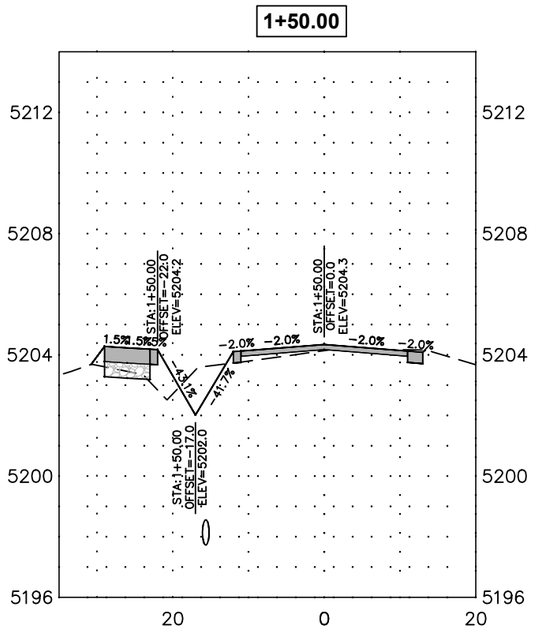

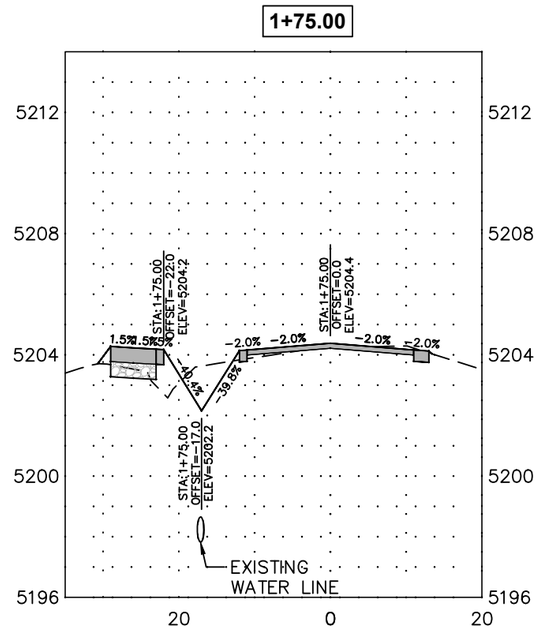

STATIONS SHOWN ARE ℄ OF MARATHON RD.

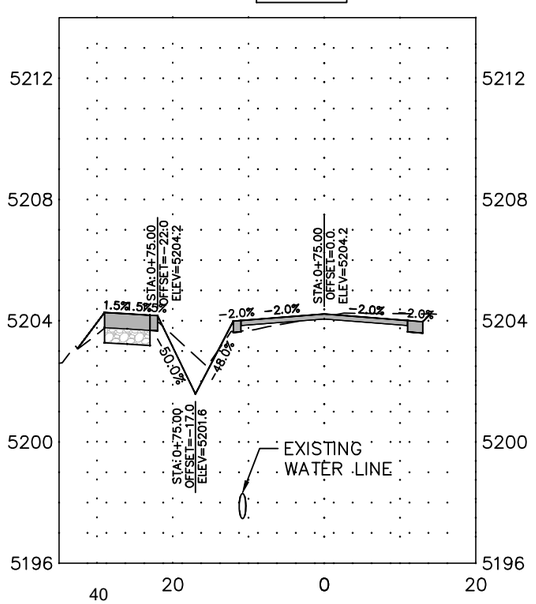

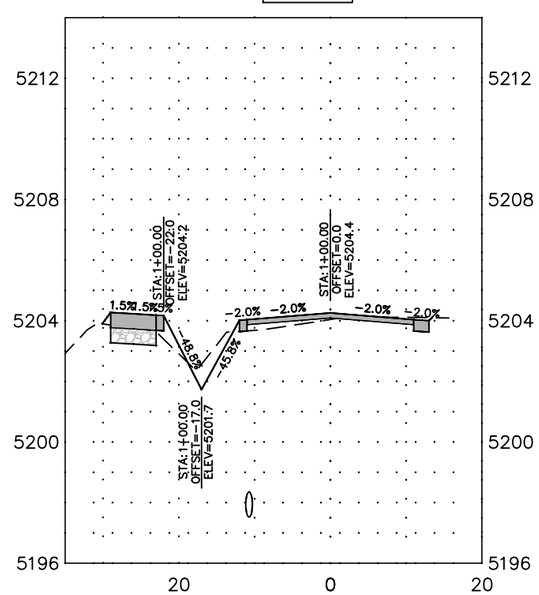

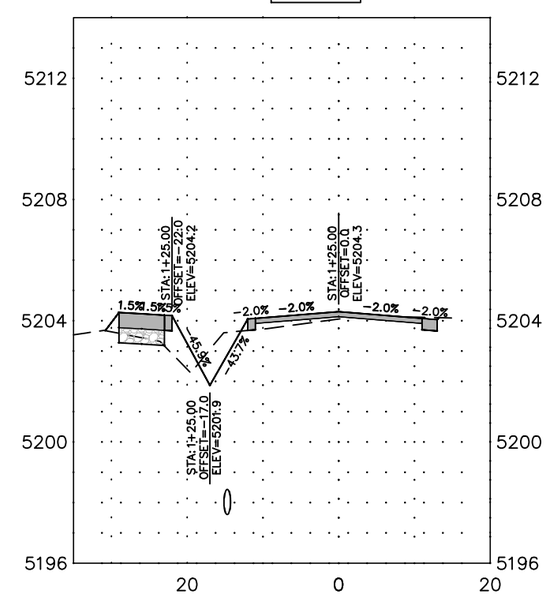

0 20 40

HORIZONTAL SCALE: 1"=20'
VERTICAL SCALE:1"=5'

FOR CONSTRUCTION

CALL UTILITY NOTIFICATION CENTER OF COLORADO

811

CALL 2-BUSINESS DAYS IN ADVANCE BEFORE YOU DIG, GRADE, OR EXCAVATE FOR THE MARKING OF UNDERGROUND MEMBER UTILITIES

REVISIONS:	NO.	DATE	REVISION DESCRIPTION:

BOULDER COUNTY PUBLIC WORKS
ENGINEERING DIVISION

DESIGNED:	CAD/C3D:	CHECKED:	DATE:
RL	RL	DW	07/30/2021

MORTON HEIGHTS-2021

CROSS SECTIONS-MARATHON RD

PROJECT NO: **RS-MOR-001** SHEET NO: **95**

C:\AUTOCAD\PROJECTS\MORTON HEIGHTS\PLAN SET\MORTON-HEIGHTS-MARATHON SECTIONS 12 MAY 2021.DWG LAST PLOTTED 7/30/2021 12:40 PM

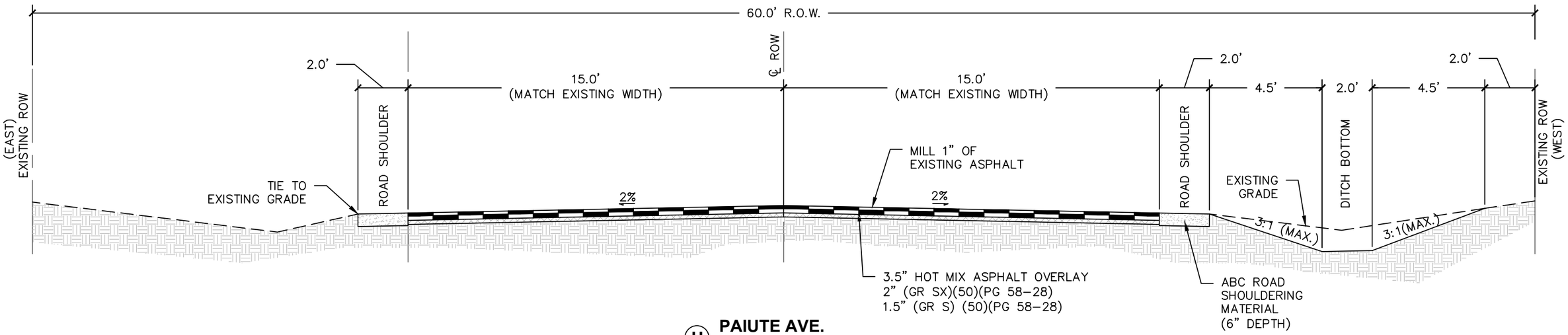

(H) PAIUTE AVE.

(LOOKING SOUTH)
SCALE: 1"=4'
STATIONS: 0+11.53 TO 5+00.00

0 4 8
HORIZONTAL SCALE: 1"=4'

FOR CONSTRUCTION

CALL UTILITY NOTIFICATION CENTER OF COLORADO
811
CALL 2-BUSINESS DAYS IN ADVANCE BEFORE YOU DIG, GRADE, OR EXCAVATE FOR THE MARKING OF UNDERGROUND MEMBER UTILITIES

REVISIONS: NO.	DATE	REVISION DESCRIPTION:

BOULDER COUNTY PUBLIC WORKS
ENGINEERING DIVISION

DESIGNED:	CAD/C3D:	CHECKED:	DATE:
RL	RL	DW	07/30/2021

MORTON HEIGHTS-2021
TYPICAL SECTION-PAUITE AVE
PROJECT NO: **RS-MOR-001** SHEET NO: **96**

C:\AUTOCAD\PROJECTS\MORTON HEIGHTS\PLAN SET\MORTON-HEIGHTS-TYP-SECTIONS 29 DEC 2017.DWG LAST PLOTTED 7/30/2021 12:40 PM

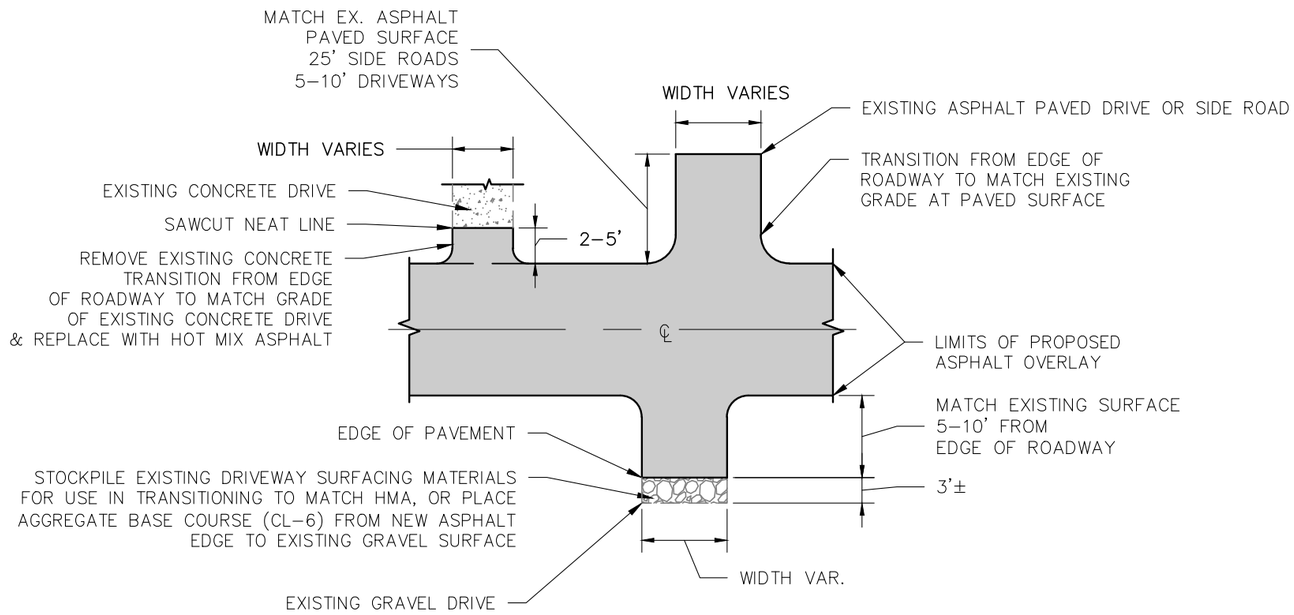

P1 APPROACH DETAIL
N.T.S.

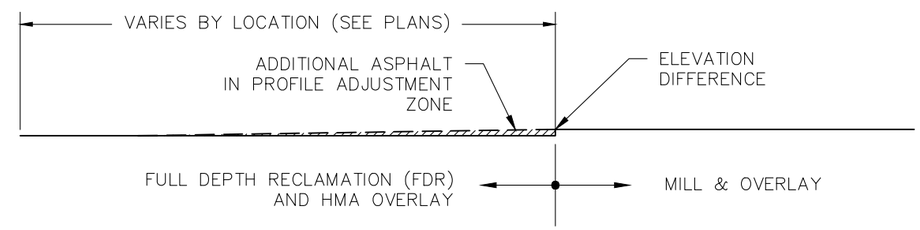

P2 PROFILE ADJUSTMENT DETAIL
N.T.S.

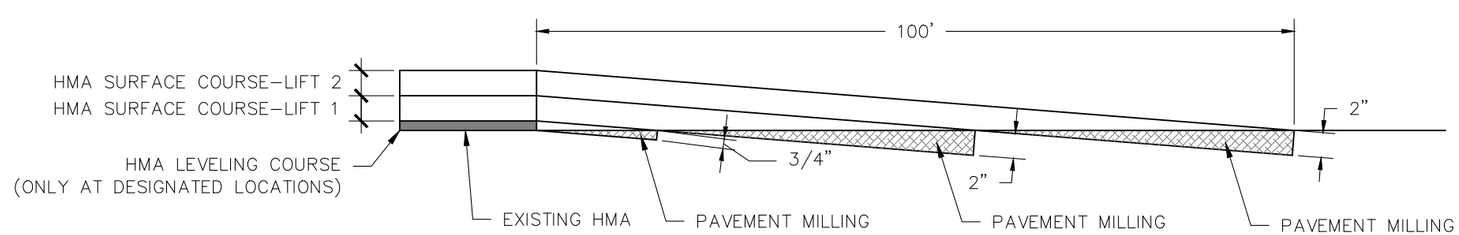

P3 HMA TRANSITION MILLING DETAIL
N.T.S.

FOR CONSTRUCTION

CALL UTILITY NOTIFICATION CENTER OF COLORADO
811
CALL 2–BUSINESS DAYS IN ADVANCE BEFORE YOU DIG, GRADE, OR EXCAVATE FOR THE MARKING OF UNDERGROUND MEMBER UTILITIES

REVISIONS: NO.	DATE	REVISION DESCRIPTION:

BOULDER COUNTY PUBLIC WORKS
ENGINEERING DIVISION

DESIGNED:	CAD/C3D:	CHECKED:	DATE:
RL	RL	DW	07/30/2021

MORTON HEIGHTS–2021
PAVING DETAILS
PROJECT NO: **RS-MOR-001** SHEET NO: **97**

C:\AUTOCAD\PROJECTS\MORTON HEIGHTS\PLAN SET\MORTON-HEIGHTS PAVING DETAILS 04 MAR 2020.DWG LAST PLOTTED 7/30/2021 12:40 PM

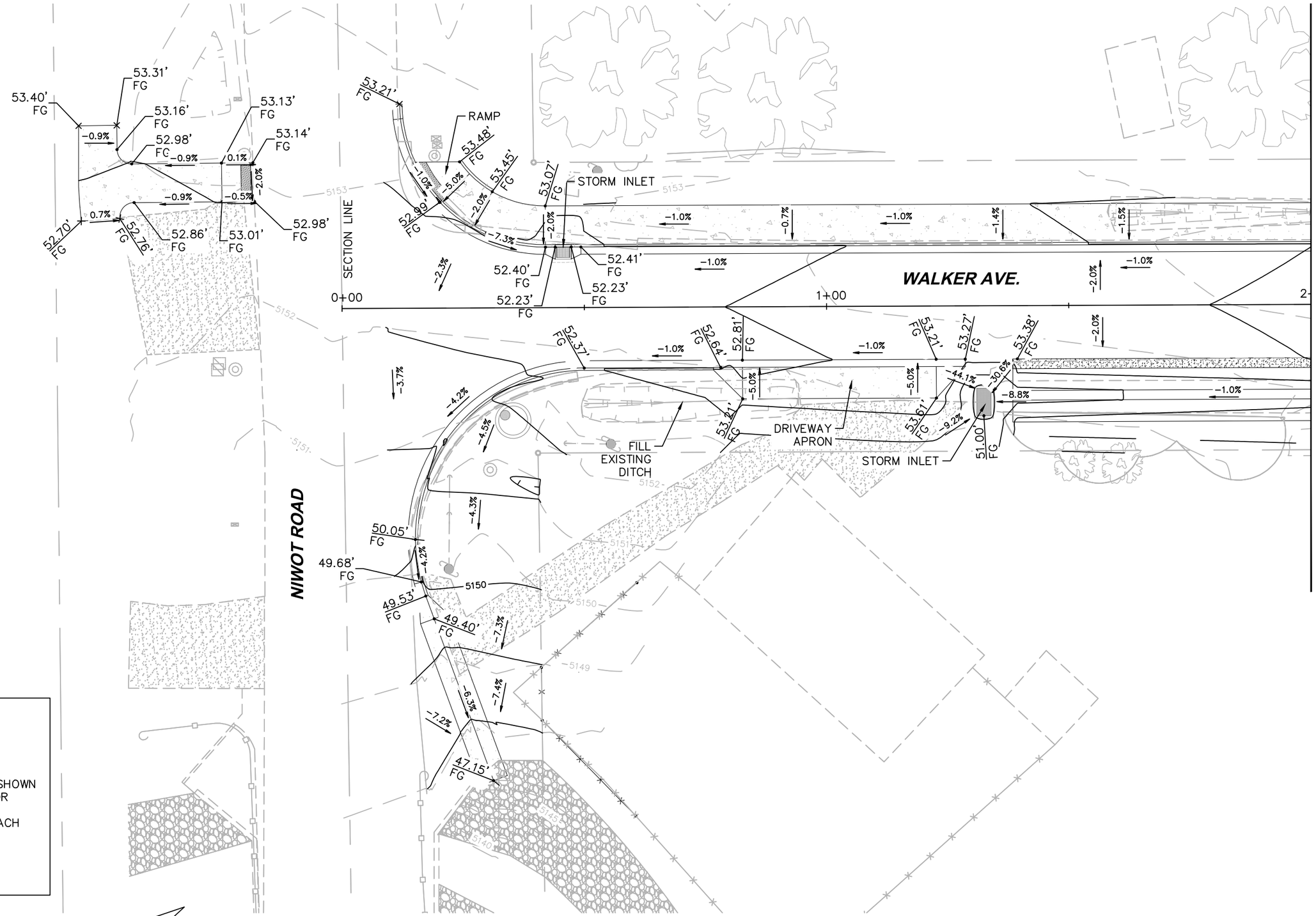

LEGEND:

52.37 FG — SPOT ELEVATION (5152.37)

SPOT ELEVATIONS SHOWN ARE TWO DIGITS FOR CLARITY.
ADD 5100.00 TO EACH ELEVATION SHOWN

-1.0% — SLOPE ARROW (PERCENTAGE)

0 20 40
HORIZONTAL SCALE: 1"=20'

N

FOR CONSTRUCTION

CALL UTILITY NOTIFICATION CENTER OF COLORADO
811
CALL 2-BUSINESS DAYS IN ADVANCE BEFORE YOU DIG, GRADE, OR EXCAVATE FOR THE MARKING OF UNDERGROUND MEMBER UTILITIES

REVISIONS: NO.	DATE	REVISION DESCRIPTION:

BOULDER COUNTY PUBLIC WORKS
ENGINEERING DIVISION

DESIGNED:	CAD/C3D:	CHECKED:	DATE:
RL	RL	DW	07/30/2021

MORTON HEIGHTS-2021

GRADING-NIWOT AND WALKER

PROJECT NO: **RS-MOR-001** SHEET NO: **98**

C:\AUTOCAD\PROJECTS\MORTON HEIGHTS\PLAN SET\MORTON-HEIGHTS-GRADING 20 FEB 2019.DWG LAST PLOTTED 7/30/2021 12:41 PM

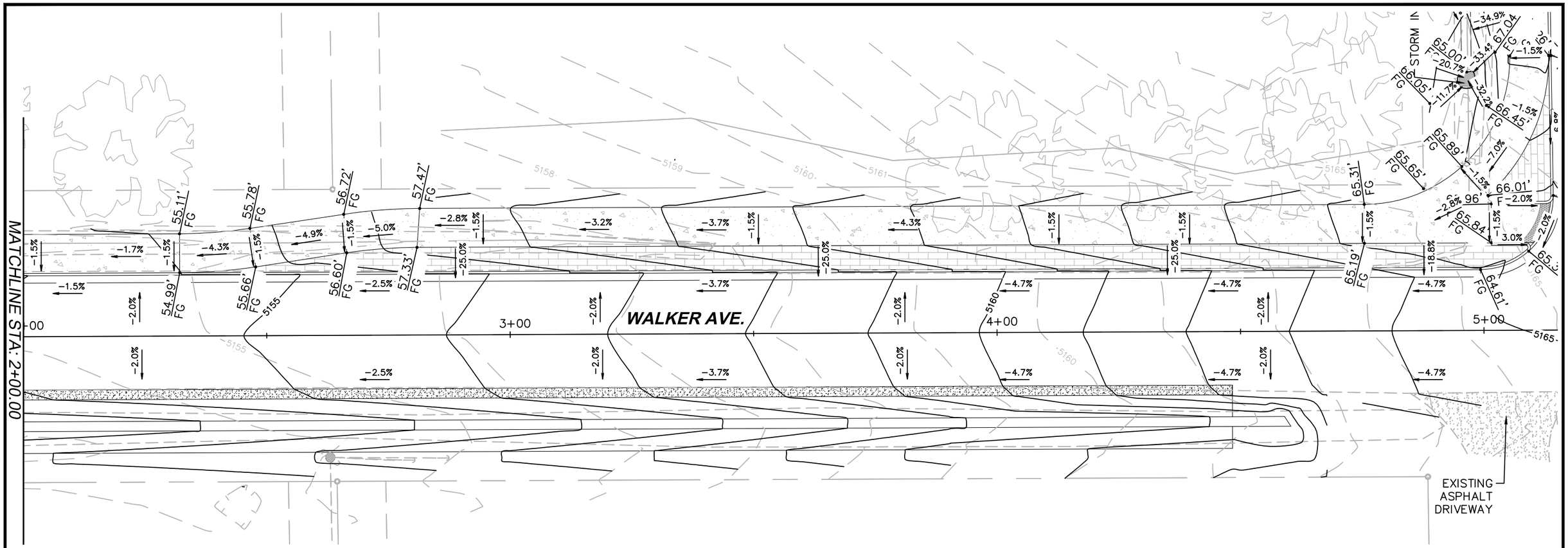

N

0 20 40

HORIZONTAL SCALE: 1"=20'

FOR CONSTRUCTION

CALL UTILITY NOTIFICATION CENTER OF COLORADO

811

CALL 2-BUSINESS DAYS IN ADVANCE BEFORE YOU DIG, GRADE, OR EXCAVATE FOR THE MARKING OF UNDERGROUND MEMBER UTILITIES

REVISIONS: NO.	DATE	REVISION DESCRIPTION:

BOULDER COUNTY PUBLIC WORKS
ENGINEERING DIVISION

DESIGNED:	CAD/C3D:	CHECKED:	DATE:
RL	RL	DW	07/30/2021

MORTON HEIGHTS-2021

GRADING-WALKER AVE

PROJECT NO: **RS-MOR-001** SHEET NO: **99**

C:\AUTOCAD\PROJECTS\MORTON HEIGHTS\PLAN SET\MORTON-HEIGHTS-GRADING 20 FEB 2019.DWG LAST PLOTTED 7/30/2021 12:41 PM

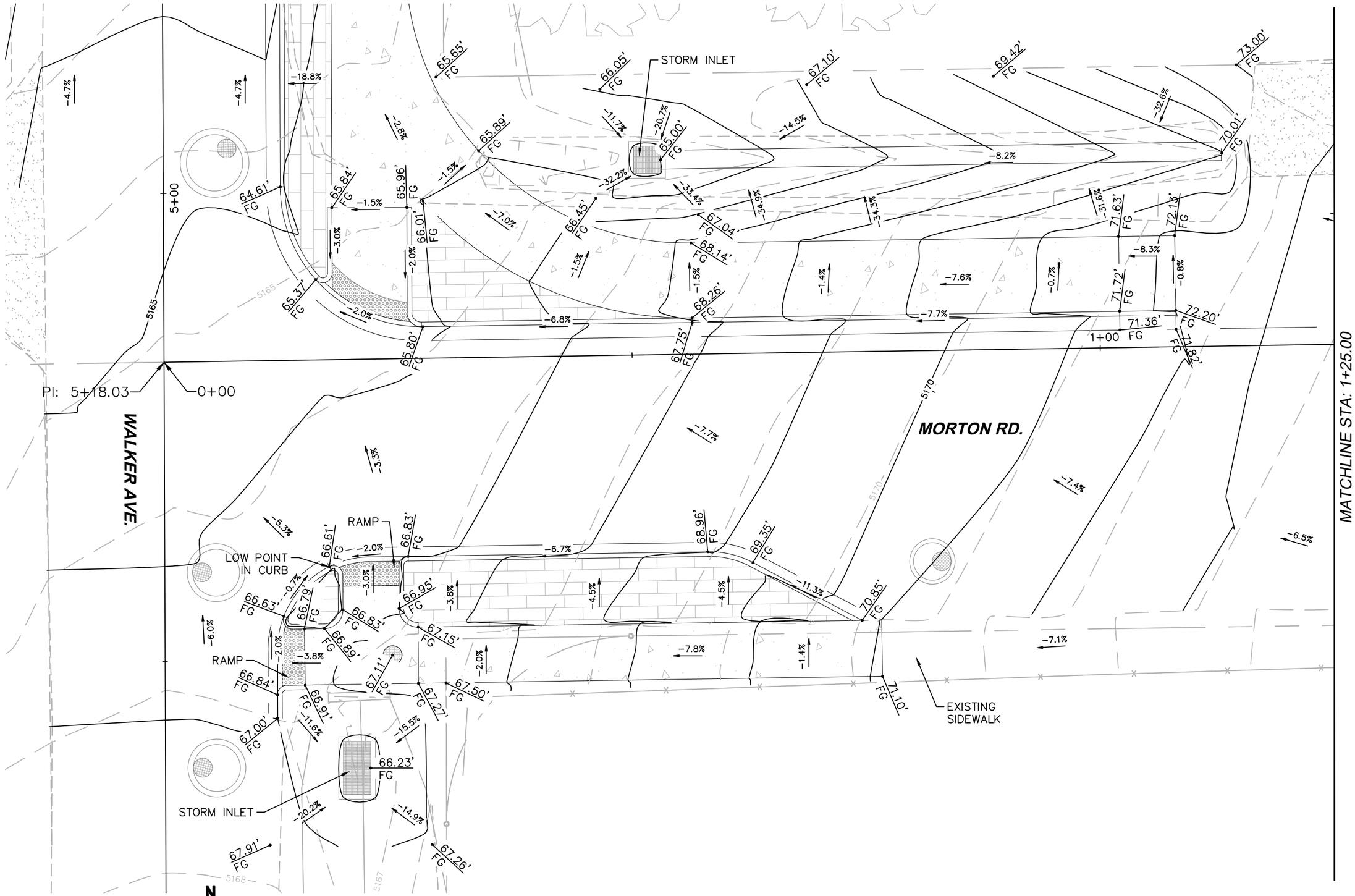

0 10 20

HORIZONTAL SCALE: 1"=10'

N

FOR CONSTRUCTION

CALL UTILITY NOTIFICATION CENTER OF COLORADO

811

CALL 2-BUSINESS DAYS IN ADVANCE BEFORE YOU DIG, GRADE, OR EXCAVATE FOR THE MARKING OF UNDERGROUND MEMBER UTILITIES

REVISIONS:	NO.	DATE	REVISION DESCRIPTION:

BOULDER COUNTY PUBLIC WORKS
ENGINEERING DIVISION

DESIGNED:	CAD/C3D:	CHECKED:	DATE:
RL	RL	DW	07/30/2021

MORTON HEIGHTS-2021

GRADING - WALKER AND MORTON

PROJECT NO: **RS-MOR-001** SHEET NO: **100**

C:\AUTOCAD\PROJECTS\MORTON HEIGHTS\PLAN SET\MORTON-HEIGHTS-GRADING 20 FEB 2019.DWG LAST PLOTTED 7/30/2021 12:41 PM

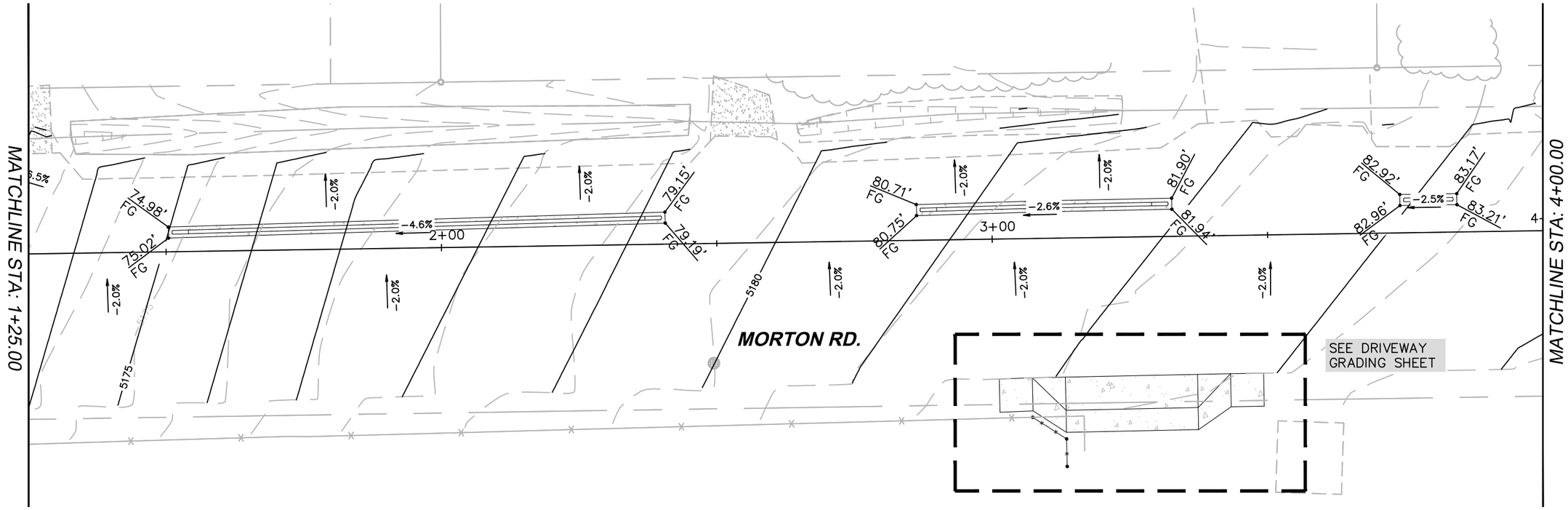

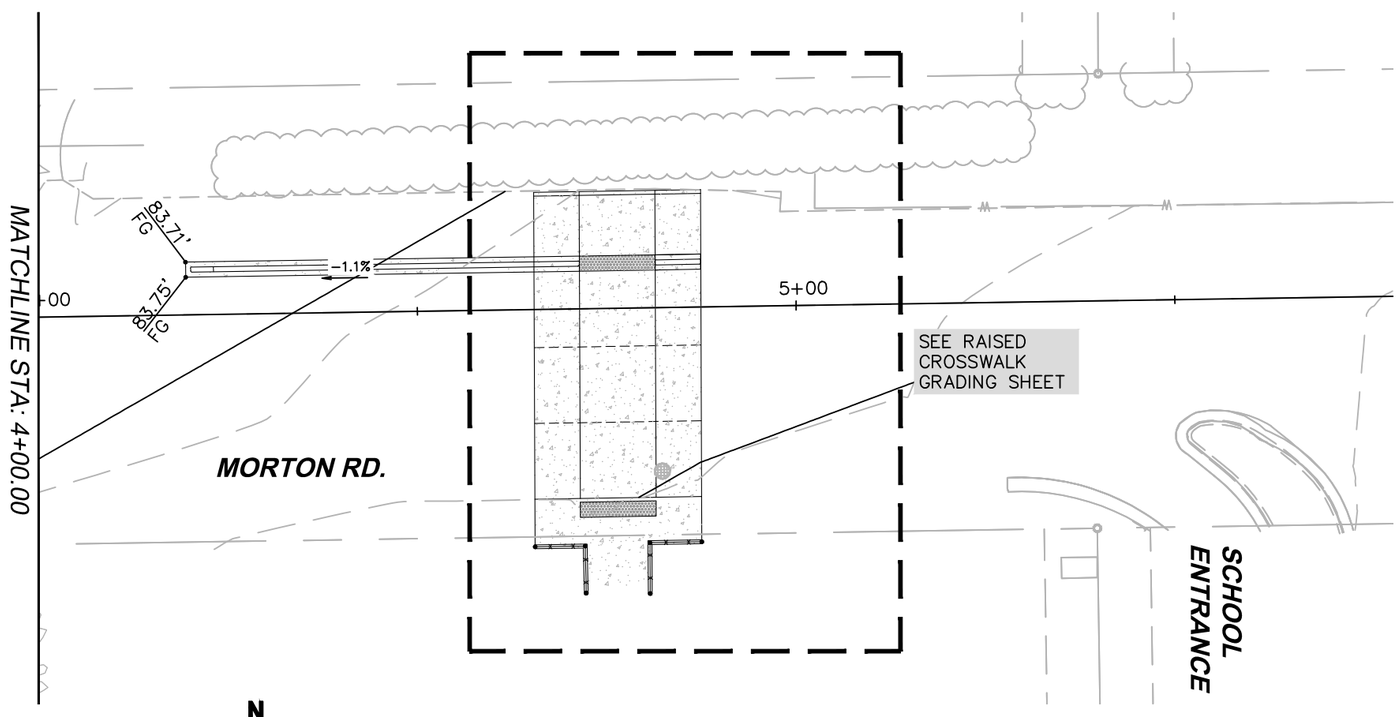

0 20 40

HORIZONTAL SCALE: 1"=20'

N

FOR CONSTRUCTION

CALL UTILITY NOTIFICATION CENTER OF COLORADO

811

CALL 2-BUSINESS DAYS IN ADVANCE BEFORE YOU DIG, GRADE, OR EXCAVATE FOR THE MARKING OF UNDERGROUND MEMBER UTILITIES

REVISIONS: NO.	DATE	REVISION DESCRIPTION:

BOULDER COUNTY PUBLIC WORKS
ENGINEERING DIVISION

DESIGNED:	CAD/C3D:	CHECKED:	DATE:
RL	RL	DW	07/30/2021

MORTON HEIGHTS-2021

GRADING - MORTON RD

PROJECT NO: **RS-MOR-001** SHEET NO: **101**

C:\AUTOCAD\PROJECTS\MORTON HEIGHTS\PLAN SET\MORTON-HEIGHTS-GRADING 20 FEB 2019.DWG LAST PLOTTED 7/30/2021 12:41 PM

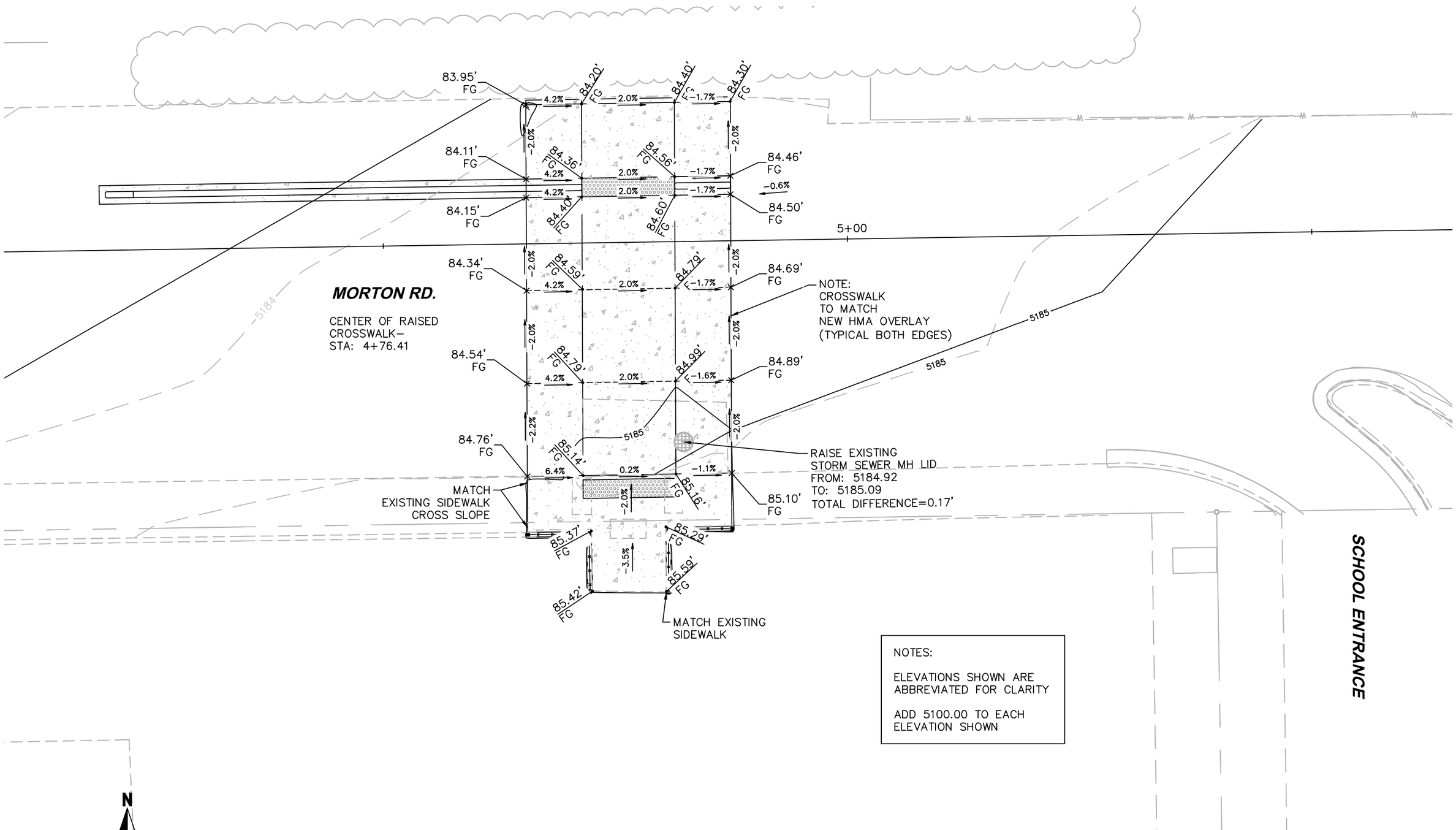

NOTES:

ELEVATIONS SHOWN ARE ABBREVIATED FOR CLARITY

ADD 5100.00 TO EACH ELEVATION SHOWN

FOR CONSTRUCTION

CALL UTILITY NOTIFICATION CENTER OF COLORADO

811

CALL 2-BUSINESS DAYS IN ADVANCE BEFORE YOU DIG, GRADE, OR EXCAVATE FOR THE MARKING OF UNDERGROUND MEMBER UTILITIES

REVISIONS:	NO.	DATE	REVISION DESCRIPTION:

BOULDER COUNTY PUBLIC WORKS
ENGINEERING DIVISION

DESIGNED:	CAD/C3D:	CHECKED:	DATE:
RL	RL	DW	07/30/2021

MORTON HEIGHTS–2021

GRADING - RAISED CROSS WALK

PROJECT NO: **RS-MOR-001** SHEET NO: **102**

C:\AUTOCAD\PROJECTS\MORTON HEIGHTS\PLAN SET\MORTON-HEIGHTS-X-WALK GRADING 09 MAR 2020.DWG LAST PLOTTED 7/30/2021 12:42 PM

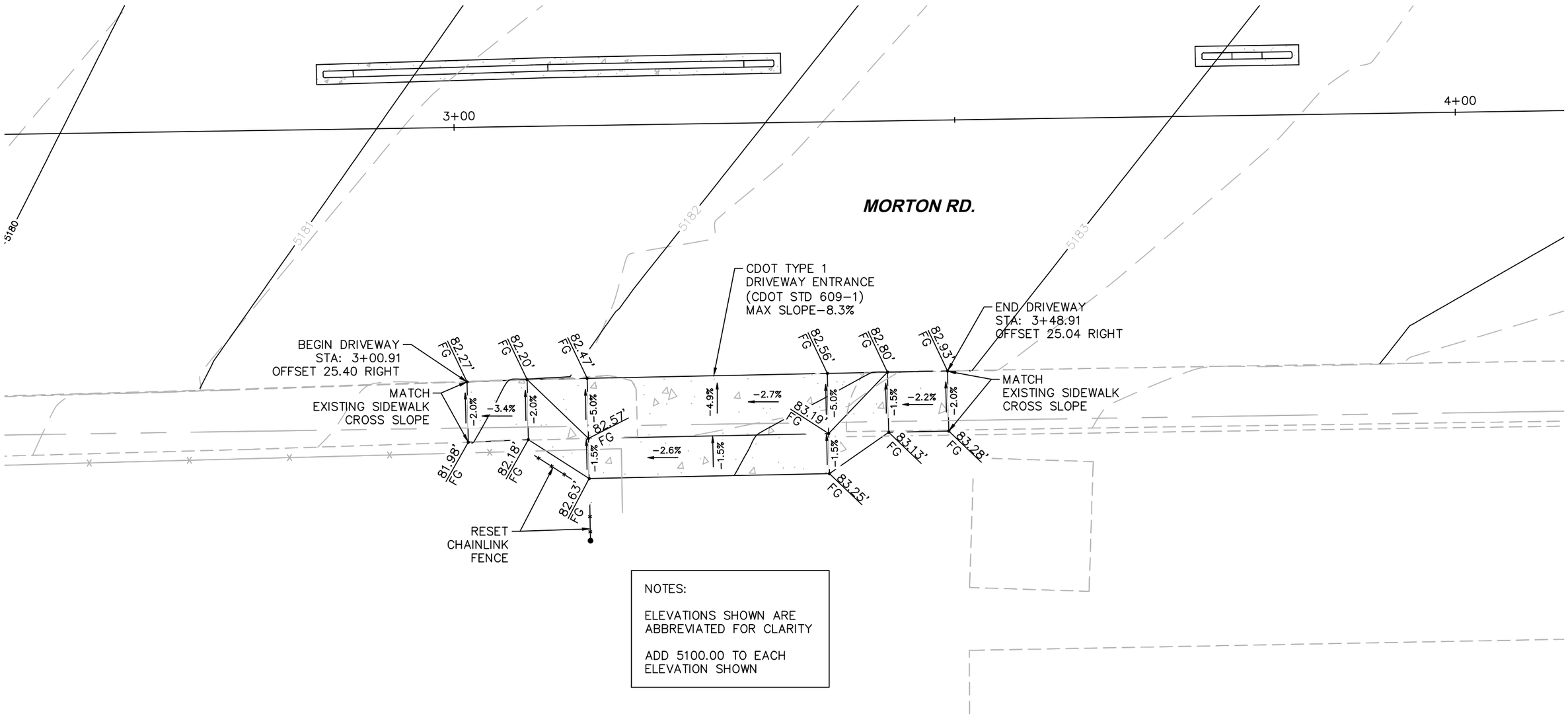

NOTES:

ELEVATIONS SHOWN ARE ABBREVIATED FOR CLARITY

ADD 5100.00 TO EACH ELEVATION SHOWN

N

0 10 20

HORIZONTAL SCALE: 1"=10'

FOR CONSTRUCTION

CALL UTILITY NOTIFICATION CENTER OF COLORADO

811

CALL 2-BUSINESS DAYS IN ADVANCE BEFORE YOU DIG, GRADE, OR EXCAVATE FOR THE MARKING OF UNDERGROUND MEMBER UTILITIES

REVISIONS:	NO.	DATE	REVISION DESCRIPTION:

Boulder County

BOULDER COUNTY PUBLIC WORKS
ENGINEERING DIVISION

DESIGNED:	CAD/C3D:	CHECKED:	DATE:
RL	RL	DW	07/30/2021

MORTON HEIGHTS-2021

GRADING-MORTON RD-DRIVEWAY

PROJECT NO: **RS-MOR-001** SHEET NO: **103**

C:\AUTOCAD\PROJECTS\MORTON HEIGHTS\PLAN SET\MORTON-HEIGHTS-X-WALK GRADING 09 MAR 2020.DWG LAST PLOTTED 7/30/2021 12:42 PM

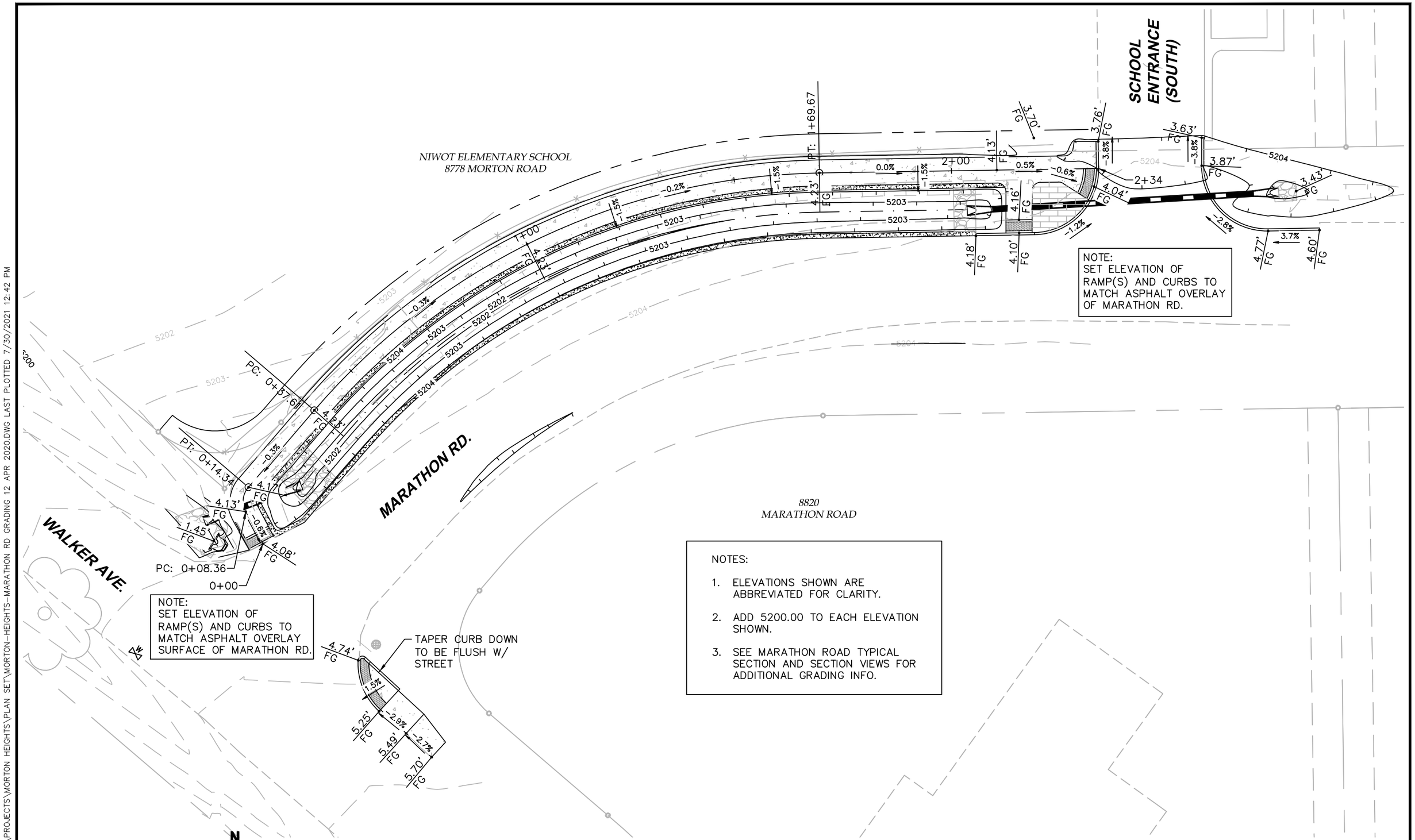

C:\AUTOCAD\PROJECTS\MORTON HEIGHTS\PLAN SET\MORTON-HEIGHTS-MARATHON RD GRADING 12 APR 2020.DWG LAST PLOTTED 7/30/2021 12:42 PM

FOR CONSTRUCTION

CALL UTILITY NOTIFICATION CENTER OF COLORADO

811

CALL 2-BUSINESS DAYS IN ADVANCE BEFORE YOU DIG, GRADE, OR EXCAVATE FOR THE MARKING OF UNDERGROUND MEMBER UTILITIES

REVISIONS: NO.	DATE	REVISION DESCRIPTION:

BOULDER COUNTY PUBLIC WORKS
ENGINEERING DIVISION

DESIGNED:	CAD/C3D:	CHECKED:	DATE:
RL	RL	DW	07/30/2021

MORTON HEIGHTS-2021

GRADING-MARATHON RD

PROJECT NO: **RS-MOR-001** SHEET NO: **104**

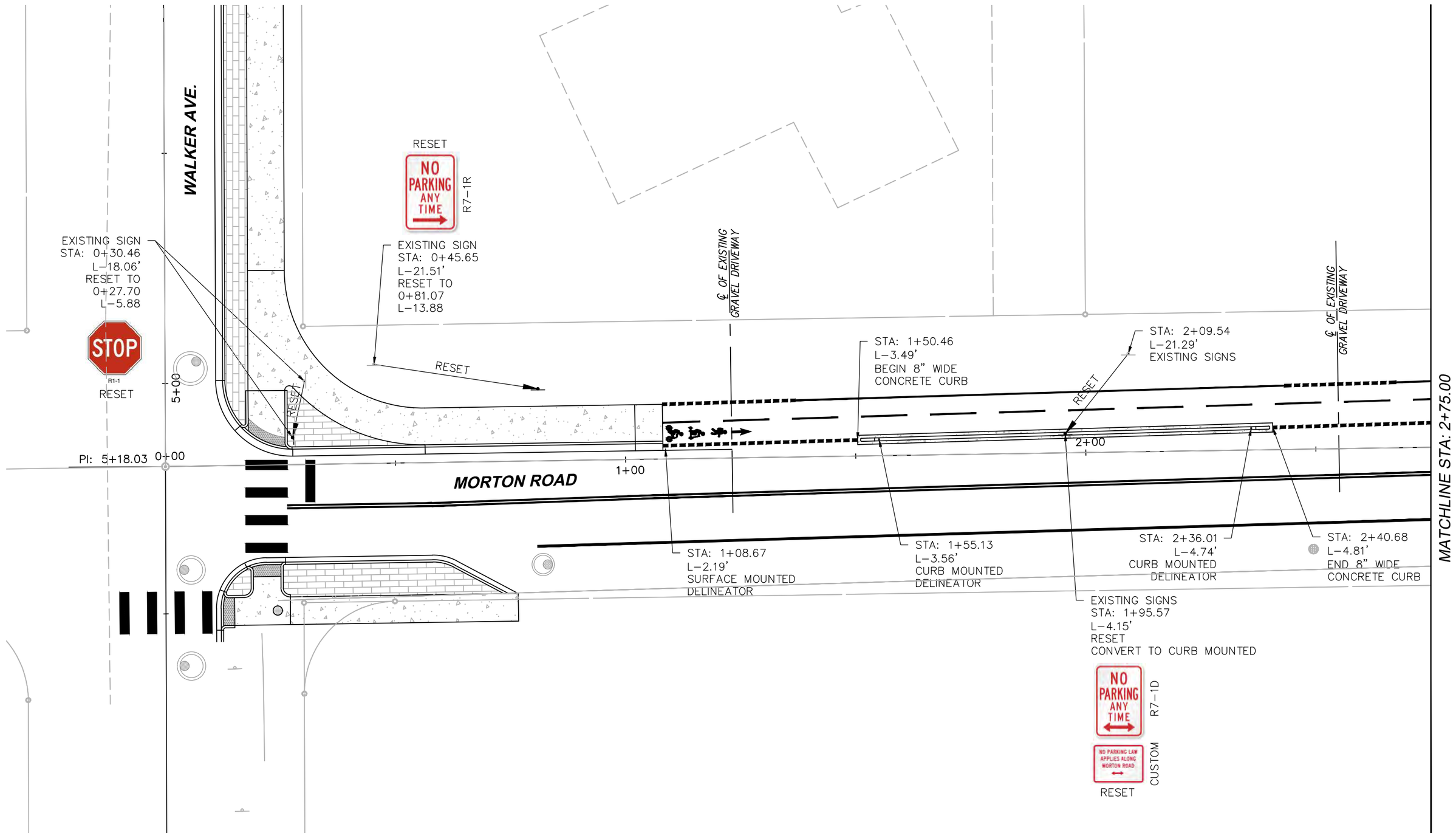

0 20 40
HORIZONTAL SCALE: 1"=20'

N

FOR CONSTRUCTION

CALL UTILITY NOTIFICATION CENTER OF COLORADO
811
CALL 2-BUSINESS DAYS IN ADVANCE BEFORE YOU DIG, GRADE, OR EXCAVATE FOR THE MARKING OF UNDERGROUND MEMBER UTILITIES

REVISIONS:	NO.	DATE	REVISION DESCRIPTION:

BOULDER COUNTY PUBLIC WORKS
ENGINEERING DIVISION

DESIGNED:	CAD/C3D:	CHECKED:	DATE:
RL	RL	DW	07/30/2021

MORTON HEIGHTS-2021
SIGNAGE-MORTON RD (1)
PROJECT NO: **RS-MOR-001** SHEET NO: **105**

C:\AUTOCAD\PROJECTS\MORTON HEIGHTS\PLAN SET\MORTON-HEIGHTS-SIGNS 15 FEB 2019.DWG LAST PLOTTED 7/30/2021 12:42 PM

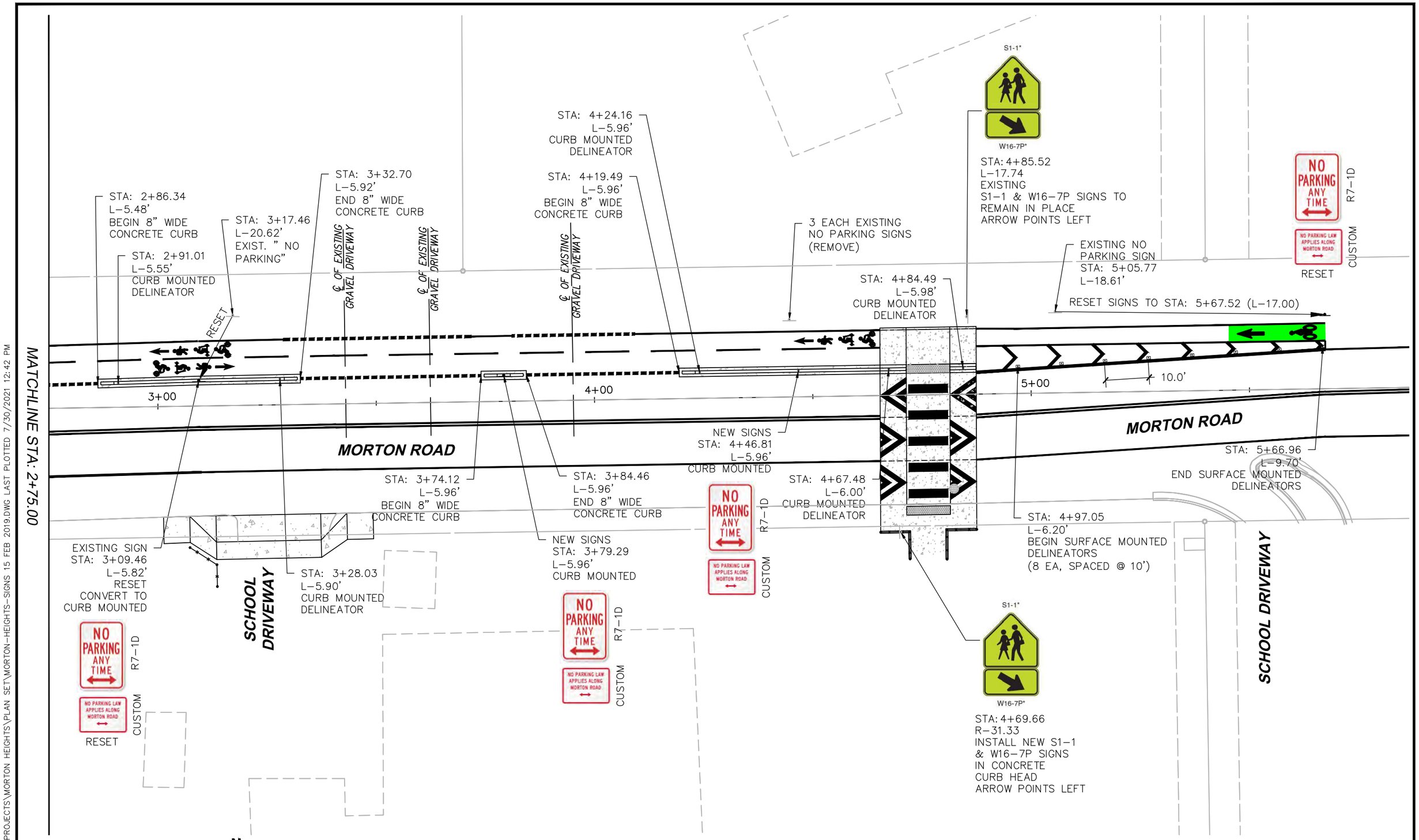

0 20 40
HORIZONTAL SCALE: 1"=20'

N

FOR CONSTRUCTION

CALL UTILITY NOTIFICATION CENTER OF COLORADO
811
CALL 2-BUSINESS DAYS IN ADVANCE BEFORE YOU DIG, GRADE, OR EXCAVATE FOR THE MARKING OF UNDERGROUND MEMBER UTILITIES

REVISIONS: NO.	DATE	REVISION DESCRIPTION:

BOULDER COUNTY PUBLIC WORKS
ENGINEERING DIVISION

DESIGNED:	CAD/C3D:	CHECKED:	DATE:
RL	RL	DW	07/30/2021

MORTON HEIGHTS-2021

SIGNAGE-MORTON RD (2)

PROJECT NO: **RS-MOR-001** SHEET NO: **106**

C:\AUTOCAD\PROJECTS\MORTON HEIGHTS\PLAN SET\MORTON-HEIGHTS-SIGNS 15 FEB 2019.DWG LAST PLOTTED 7/30/2021 12:42 PM

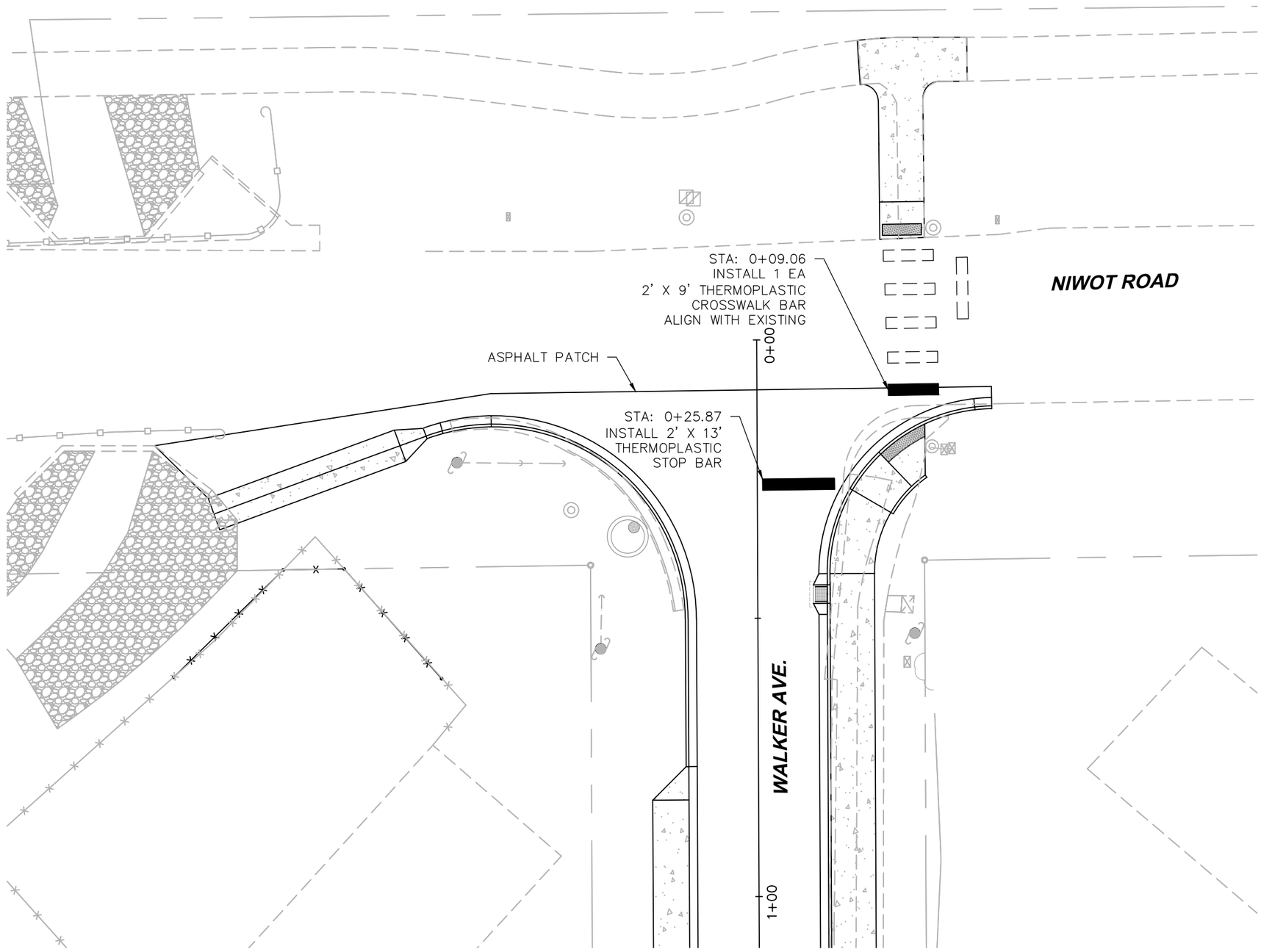

0 20 40

HORIZONTAL SCALE: 1"=20'

N

FOR CONSTRUCTION

CALL UTILITY NOTIFICATION CENTER OF COLORADO

811

CALL 2-BUSINESS DAYS IN ADVANCE BEFORE YOU DIG, GRADE, OR EXCAVATE FOR THE MARKING OF UNDERGROUND MEMBER UTILITIES

REVISIONS:	NO.	DATE	REVISION DESCRIPTION:

BOULDER COUNTY PUBLIC WORKS
ENGINEERING DIVISION

DESIGNED:	CAD/C3D:	CHECKED:	DATE:
RL	RL	DW	07/30/2021

MORTON HEIGHTS-2021

STRIPING-WALKER AVE AND NIWOT RD (1)

PROJECT NO: **RS-MOR-001** SHEET NO: **107**

C:\AUTOCAD\PROJECTS\MORTON HEIGHTS\PLAN SET\MORTON-HEIGHTS-STRIPING 11 FEB 2019.DWG LAST PLOTTED 7/30/2021 12:43 PM

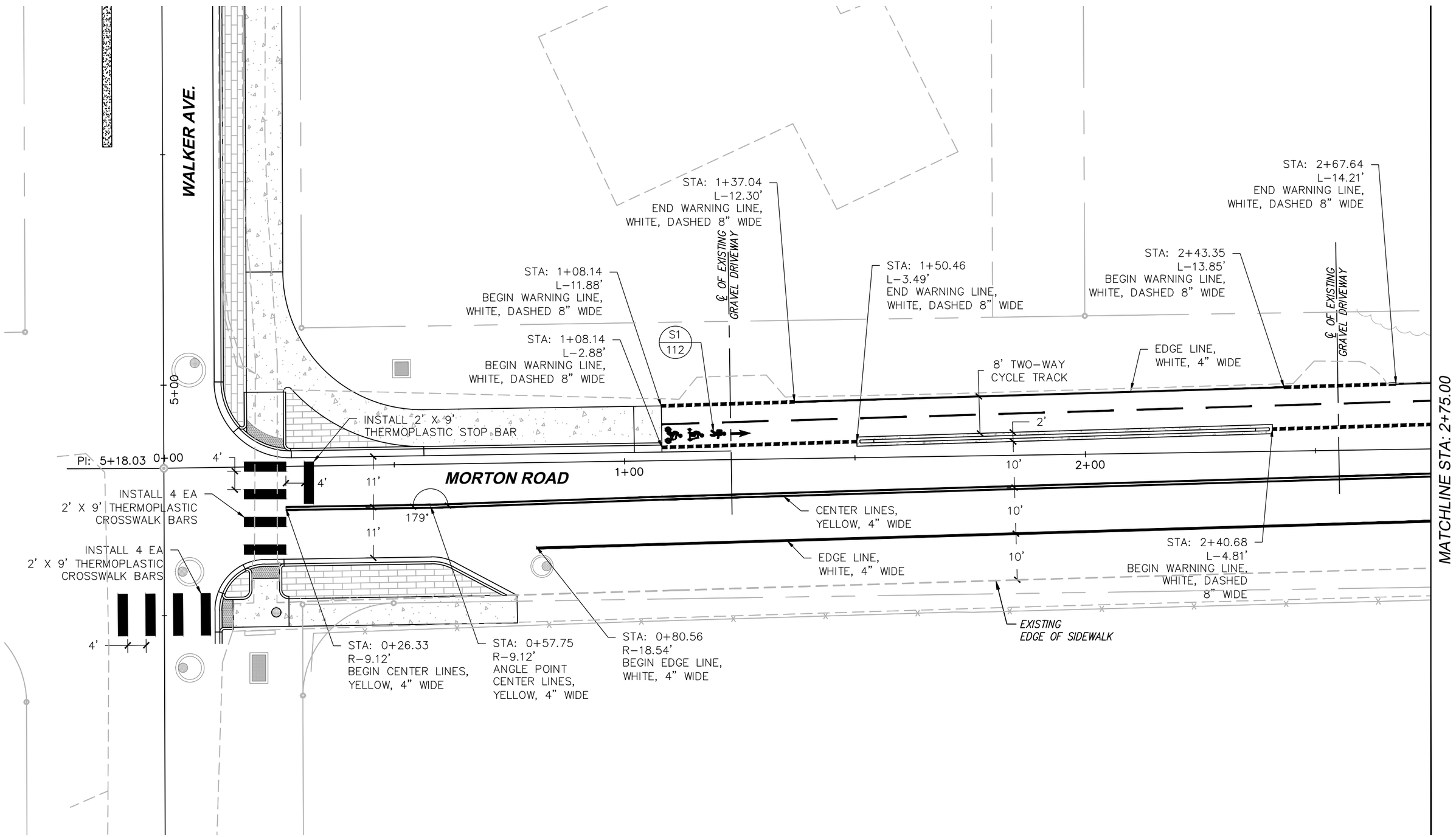

0 20 40
HORIZONTAL SCALE: 1"=20'

N

FOR CONSTRUCTION

CALL UTILITY NOTIFICATION CENTER OF COLORADO
811
CALL 2-BUSINESS DAYS IN ADVANCE BEFORE YOU DIG, GRADE, OR EXCAVATE FOR THE MARKING OF UNDERGROUND MEMBER UTILITIES

REVISIONS: NO.	DATE	REVISION DESCRIPTION:

BOULDER COUNTY PUBLIC WORKS
ENGINEERING DIVISION

DESIGNED:	CAD/C3D:	CHECKED:	DATE:
RL	RL	DW	07/30/2021

MORTON HEIGHTS-2021
STRIPING-MORTON RD (1)
PROJECT NO: **RS-MOR-001** SHEET NO: **108**

C:\AUTOCAD\PROJECTS\MORTON HEIGHTS\PLAN SET\MORTON-HEIGHTS-STRIPING 11 FEB 2019.DWG LAST PLOTTED 7/30/2021 12:43 PM

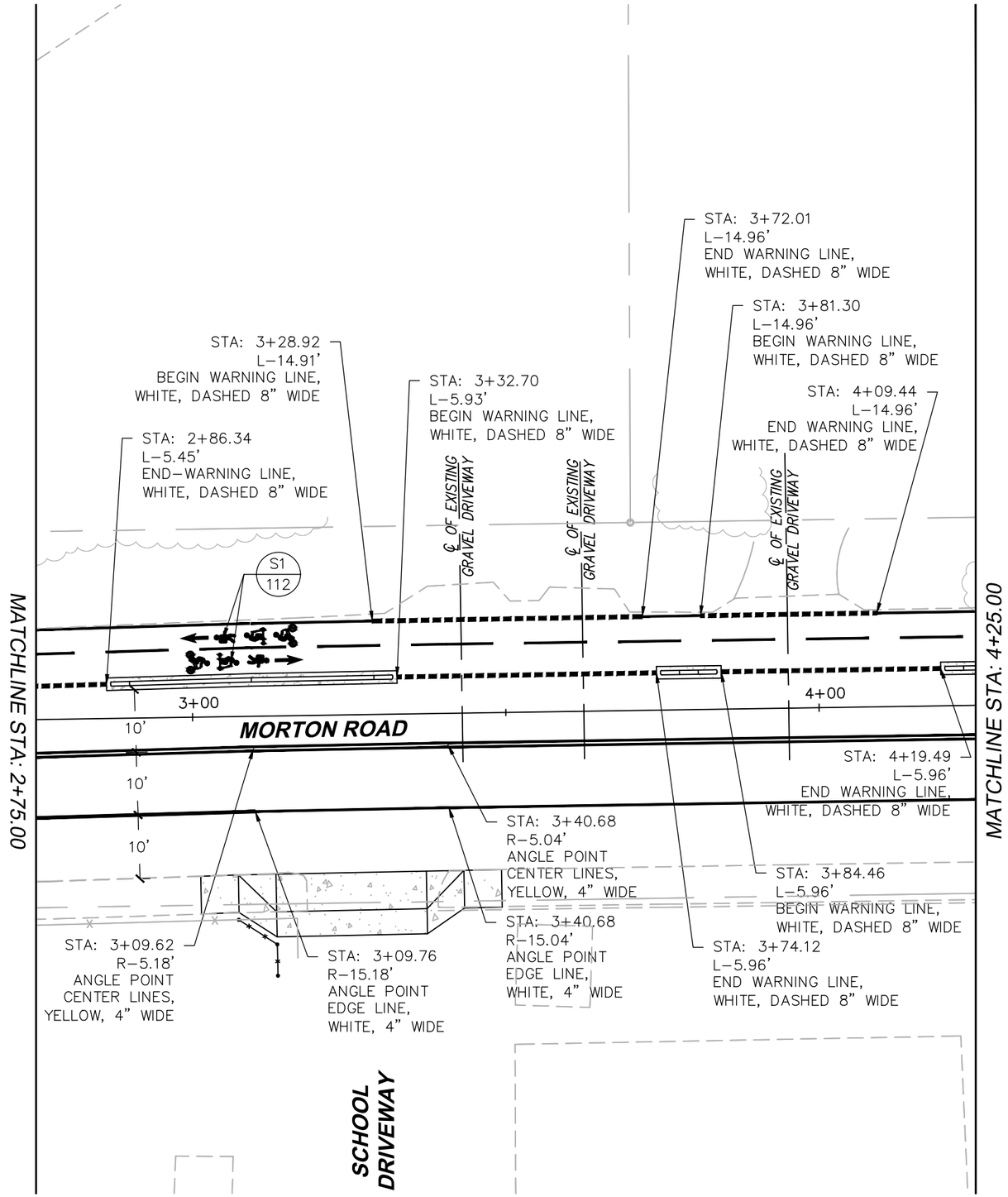

0 20 40
HORIZONTAL SCALE: 1"=20'

N

FOR CONSTRUCTION

CALL UTILITY NOTIFICATION CENTER OF COLORADO
811
CALL 2–BUSINESS DAYS IN ADVANCE BEFORE YOU DIG, GRADE, OR EXCAVATE FOR THE MARKING OF UNDERGROUND MEMBER UTILITIES

REVISIONS:	NO.	DATE	REVISION DESCRIPTION:

BOULDER COUNTY PUBLIC WORKS
ENGINEERING DIVISION

DESIGNED:	CAD/C3D:	CHECKED:	DATE:
RL	RL	DW	07/30/2021

MORTON HEIGHTS–2021
STRIPING-MORTON RD (2)
PROJECT NO: **RS-MOR-001** SHEET NO: **109**

C:\AUTOCAD\PROJECTS\MORTON HEIGHTS\PLAN SET\MORTON-HEIGHTS-STRIPING 11 FEB 2019.DWG LAST PLOTTED 7/30/2021 12:43 PM

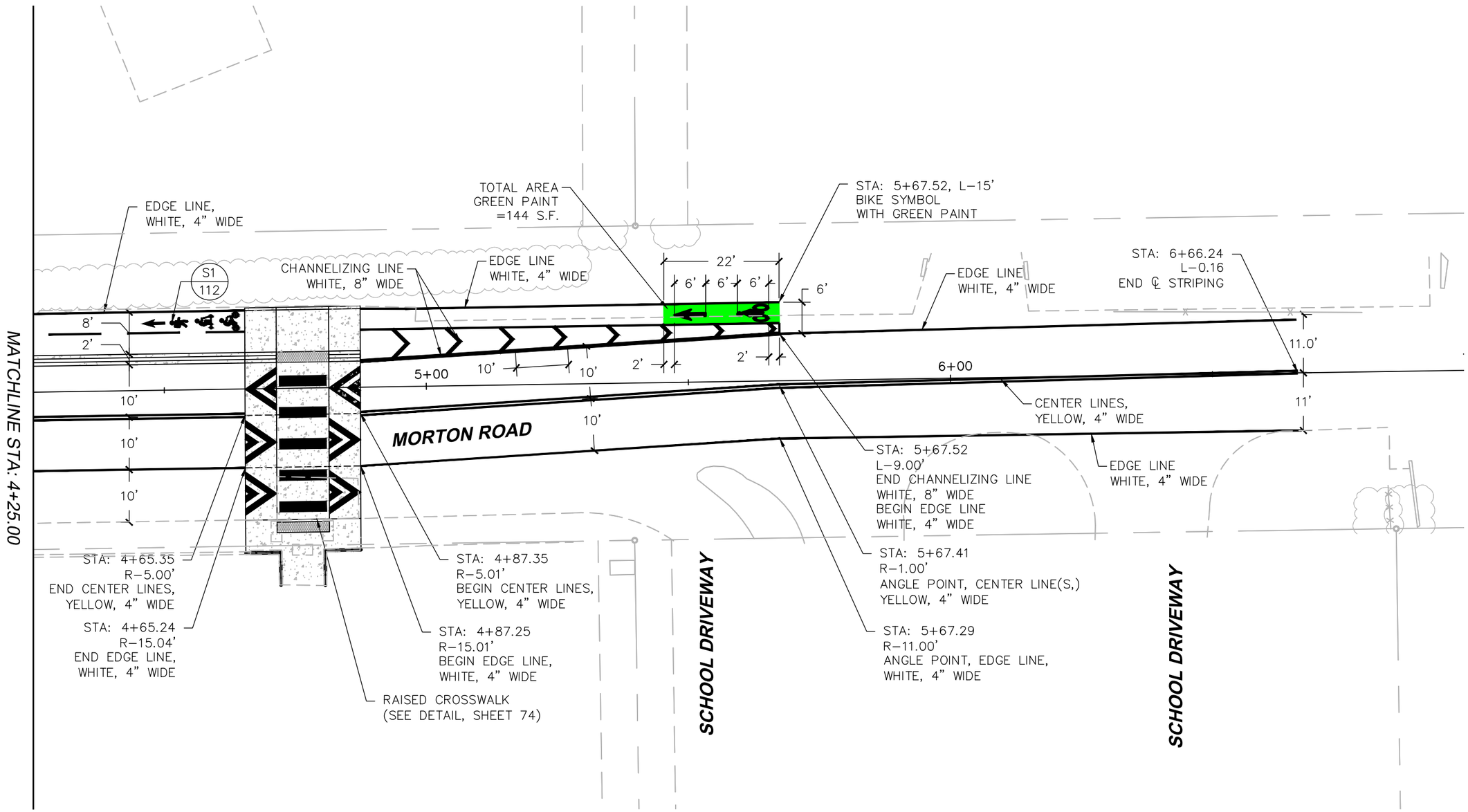

0 20 40

HORIZONTAL SCALE: 1"=20'

N

FOR CONSTRUCTION

CALL UTILITY NOTIFICATION CENTER OF COLORADO

811

CALL 2-BUSINESS DAYS IN ADVANCE BEFORE YOU DIG, GRADE, OR EXCAVATE FOR THE MARKING OF UNDERGROUND MEMBER UTILITIES

REVISIONS:	NO.	DATE	REVISION DESCRIPTION:

BOULDER COUNTY PUBLIC WORKS
ENGINEERING DIVISION

DESIGNED:	CAD/C3D:	CHECKED:	DATE:
RL	RL	DW	07/30/2021

MORTON HEIGHTS-2021

STRIPING-MORTON RD (3)

PROJECT NO: **RS-MOR-001** SHEET NO: **110**

C:\AUTOCAD\PROJECTS\MORTON HEIGHTS\PLAN SET\MORTON-HEIGHTS-STRIPING 11 FEB 2019.DWG LAST PLOTTED 7/30/2021 12:43 PM

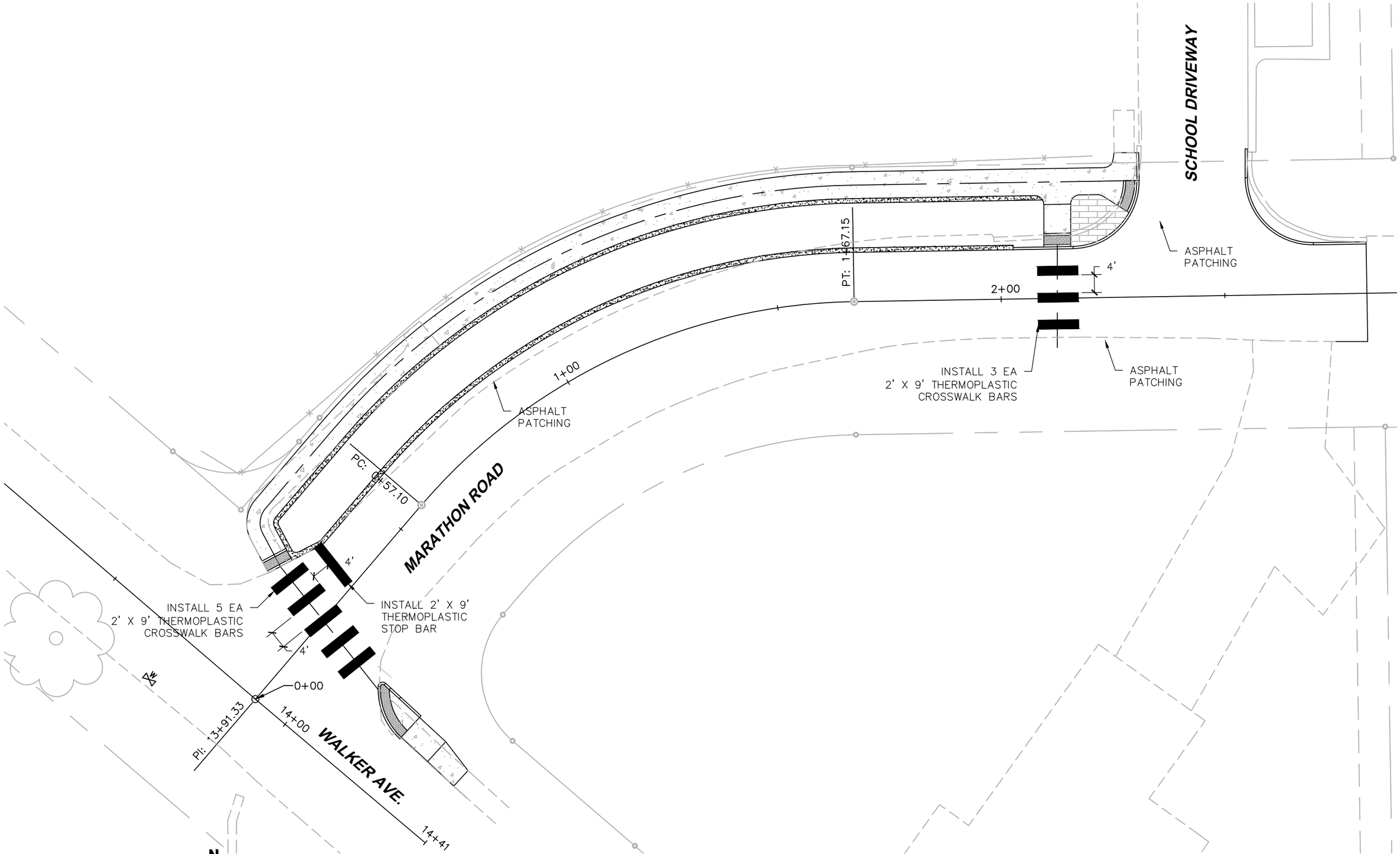

FOR CONSTRUCTION

CALL UTILITY NOTIFICATION CENTER OF COLORADO

811

CALL 2-BUSINESS DAYS IN ADVANCE BEFORE YOU DIG, GRADE, OR EXCAVATE FOR THE MARKING OF UNDERGROUND MEMBER UTILITIES

REVISIONS:	NO.	DATE	REVISION DESCRIPTION:

Boulder County

BOULDER COUNTY PUBLIC WORKS
ENGINEERING DIVISION

DESIGNED:	CAD/C3D:	CHECKED:	DATE:
RL	RL	DW	07/30/2021

MORTON HEIGHTS-2021

STRIPING-MARATHON RD

PROJECT NO: **RS-MOR-001** SHEET NO: **111**

C:\AUTOCAD\PROJECTS\MORTON HEIGHTS\PLAN SET\MORTON-HEIGHTS-STRIPING 11 FEB 2019.DWG LAST PLOTTED 7/30/2021 12:43 PM

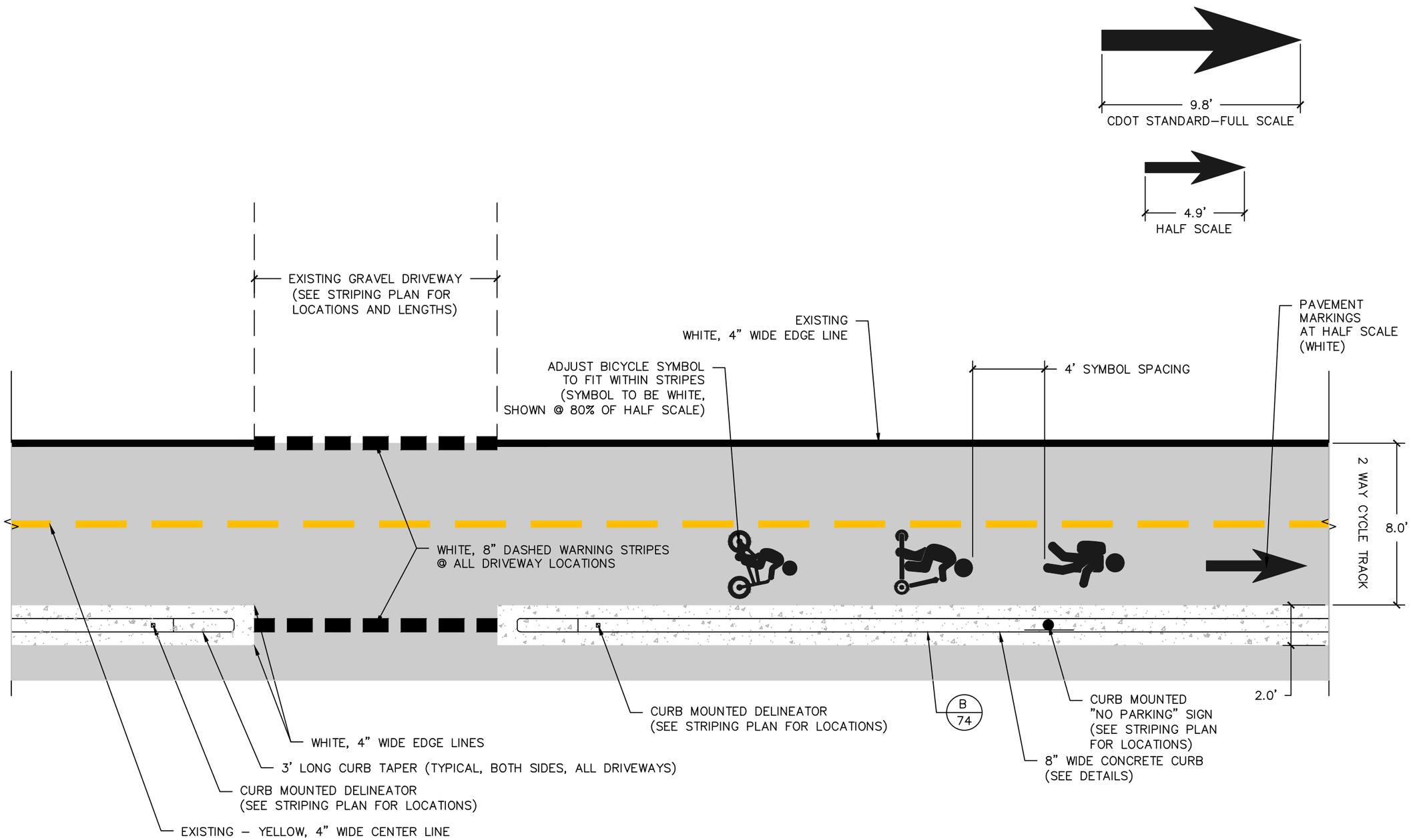

S1 TWO-WAY CYCLE TRACK-PAVEMENT MARKINGS

SCALE: 1"=5'

0 5 10

HORIZONTAL SCALE: 1"=5'

FOR CONSTRUCTION

CALL UTILITY NOTIFICATION CENTER OF COLORADO

811

CALL 2-BUSINESS DAYS IN ADVANCE BEFORE YOU DIG, GRADE, OR EXCAVATE FOR THE MARKING OF UNDERGROUND MEMBER UTILITIES

REVISIONS:	NO.	DATE	REVISION DESCRIPTION:

Boulder County

BOULDER COUNTY PUBLIC WORKS
ENGINEERING DIVISION

DESIGNED:	CAD/C3D:	CHECKED:	DATE:
RL	RL	DW	07/30/2021

MORTON HEIGHTS–2021

CYCLE TRACK MARKINGS-MORTON RD

PROJECT NO: **RS-MOR-001** SHEET NO: **112**

C:\AUTOCAD\PROJECTS\MORTON HEIGHTS\PLAN SET\MORTON-HEIGHTS-CYCLE-TRACK 14 JAN 2020.DWG LAST PLOTTED 7/30/2021 12:43 PM

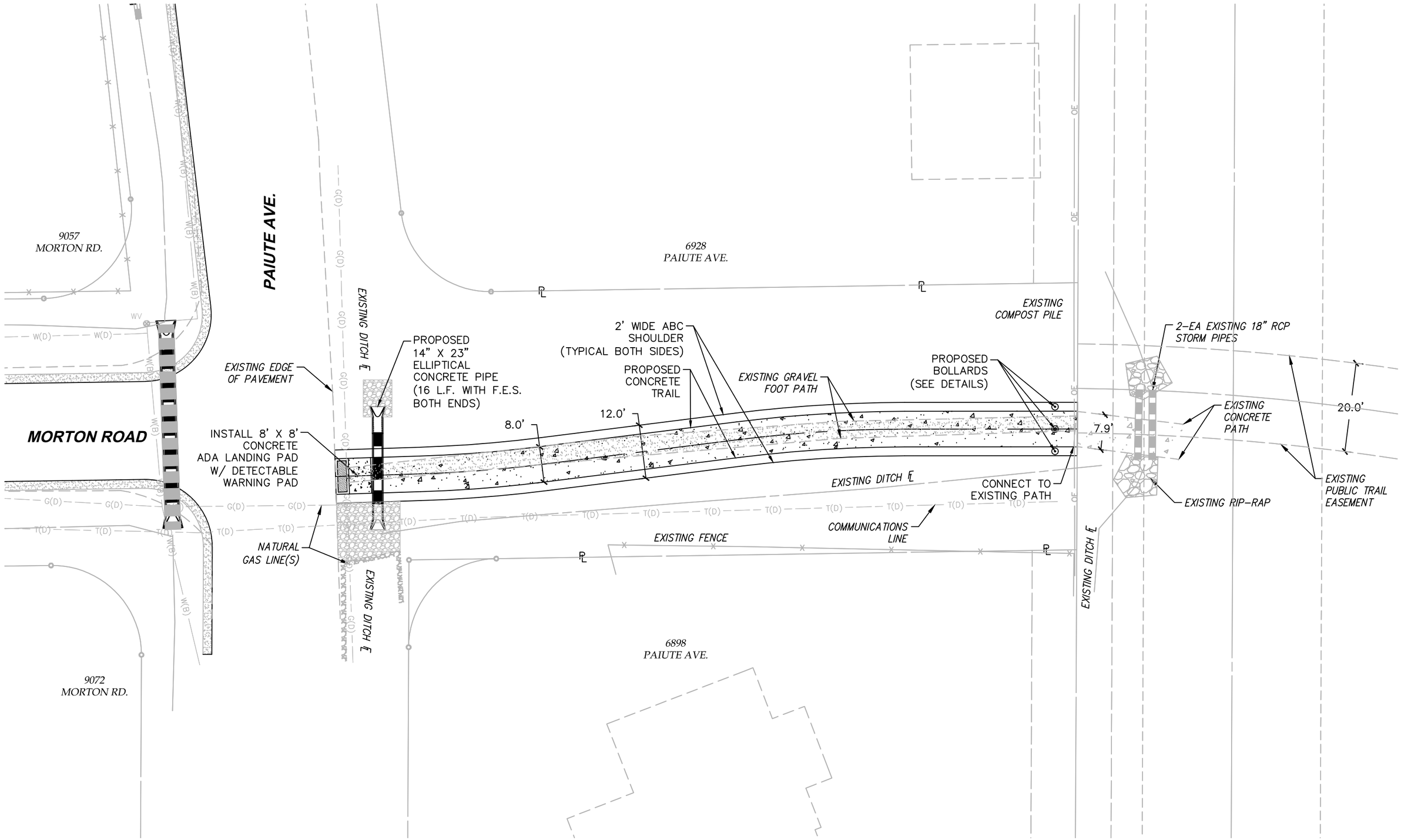

0 20 40

HORIZONTAL SCALE: 1"=20'

N

FOR CONSTRUCTION

CALL UTILITY NOTIFICATION CENTER OF COLORADO

811

CALL 2-BUSINESS DAYS IN ADVANCE BEFORE YOU DIG, GRADE, OR EXCAVATE FOR THE MARKING OF UNDERGROUND MEMBER UTILITIES

REVISIONS:	NO.	DATE	REVISION DESCRIPTION:

BOULDER COUNTY PUBLIC WORKS
ENGINEERING DIVISION

DESIGNED:	CAD/C3D:	CHECKED:	DATE:
RL	RL	DW	07/30/2021

MORTON HEIGHTS-2021

MORTON RD-TRAIL

PROJECT NO: **RS-MOR-001** SHEET NO: **113**

C:\AUTOCAD\PROJECTS\MORTON HEIGHTS\PLAN SET\MORTON-HEIGHTS-MORTON TRAIL 04 DEC 2018.DWG LAST PLOTTED 7/30/2021 12:43 PM

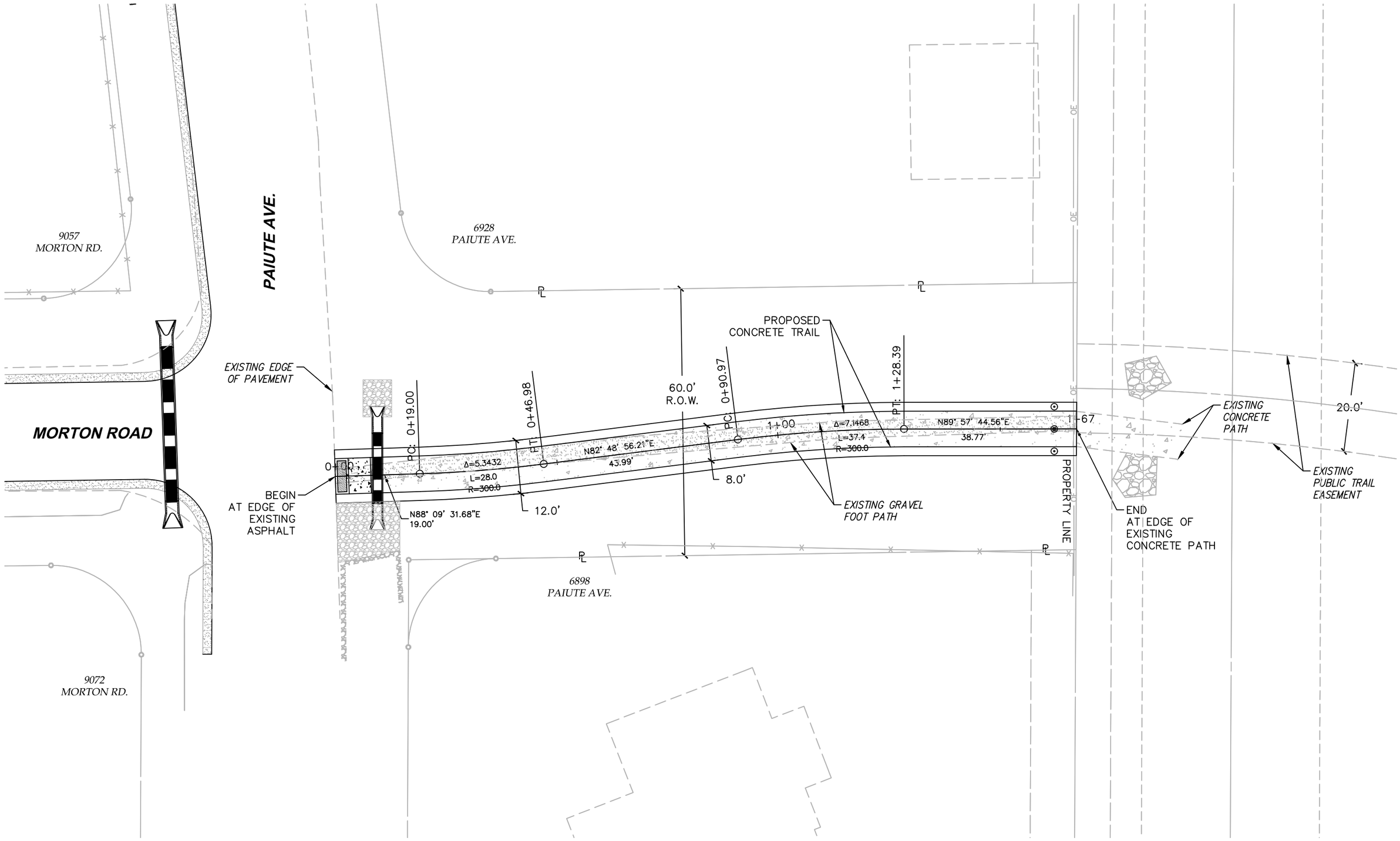

0 20 40

HORIZONTAL SCALE: 1"=20'

N

FOR CONSTRUCTION

CALL UTILITY NOTIFICATION CENTER OF COLORADO

811

CALL 2-BUSINESS DAYS IN ADVANCE BEFORE YOU DIG, GRADE, OR EXCAVATE FOR THE MARKING OF UNDERGROUND MEMBER UTILITIES

REVISIONS:	NO.	DATE	REVISION DESCRIPTION:

BOULDER COUNTY PUBLIC WORKS
ENGINEERING DIVISION

DESIGNED:	CAD/C3D:	CHECKED:	DATE:
RL	RL	DW	07/30/2021

MORTON HEIGHTS-2021

MORTON TRAIL-GEOMETRY

PROJECT NO: **RS-MOR-001** SHEET NO: **114**

C:\AUTOCAD\PROJECTS\MORTON HEIGHTS\PLAN SET\MORTON-HEIGHTS-MORTON GEOMETRY 04 DEC 2018.DWG LAST PLOTTED 7/30/2021 12:43 PM

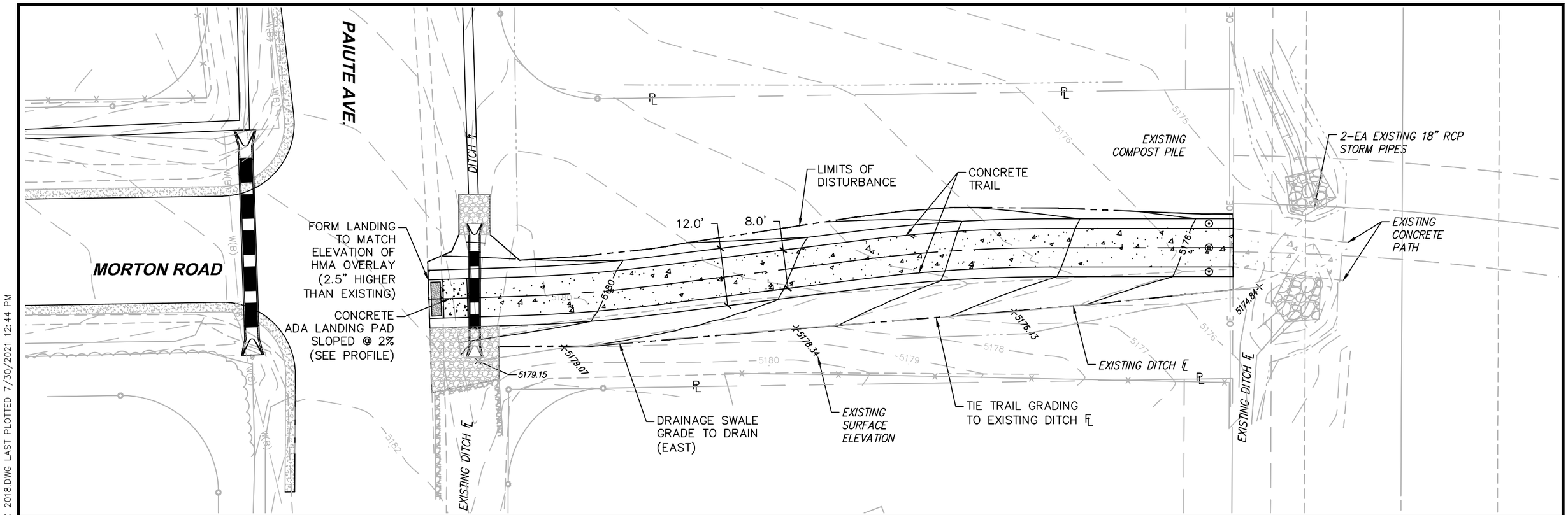

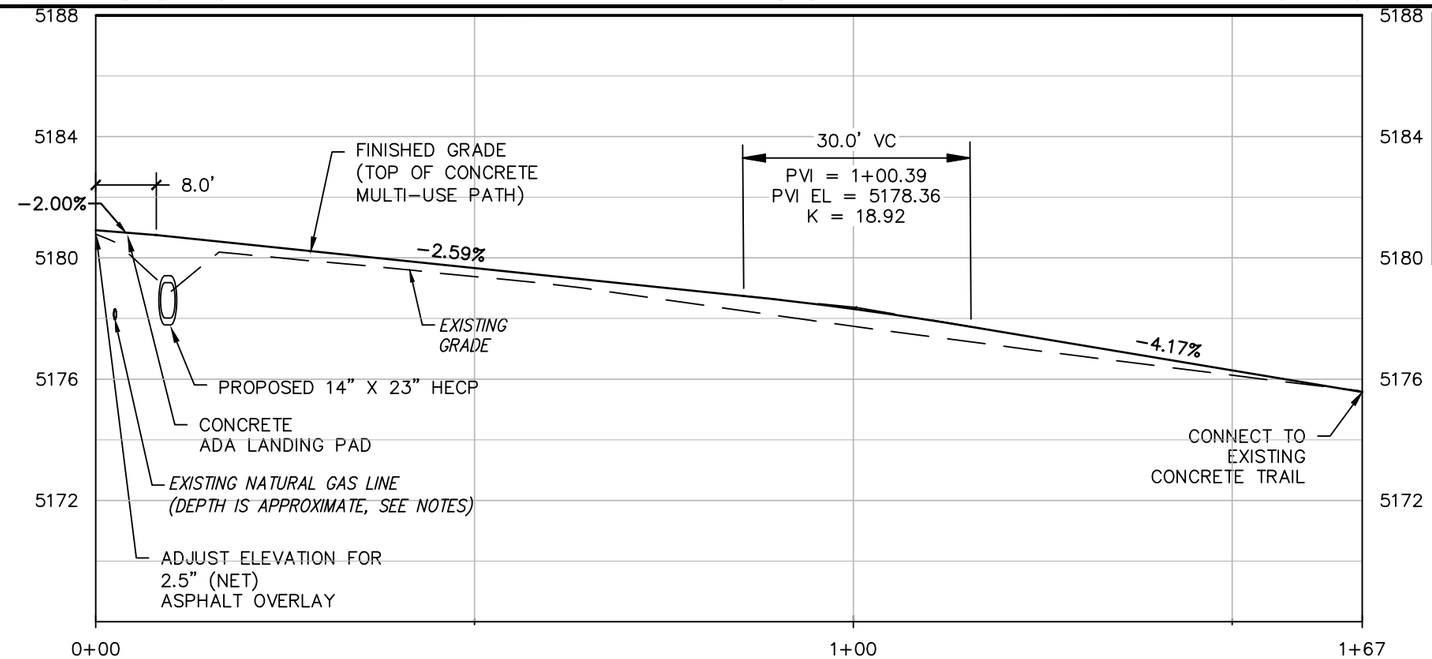

NOTES:

1. SUBSURFACE UTILITY INVESTIGATION (S.U.E.) WAS NOT PERFORMED ON THIS SECTION OF THE PROJECT.
2. CONTRACTOR SHALL CONTACT 811 FOR UTILITY MARKINGS PRIOR TO EXCAVATION.

0 20 40

HORIZONTAL SCALE: 1"=20'
VERTICAL SCALE: 1"=5'

N

FOR CONSTRUCTION

CALL UTILITY NOTIFICATION CENTER OF COLORADO
811
CALL 2-BUSINESS DAYS IN ADVANCE BEFORE YOU DIG, GRADE, OR EXCAVATE FOR THE MARKING OF UNDERGROUND MEMBER UTILITIES

REVISIONS:	NO.	DATE	REVISION DESCRIPTION:

BOULDER COUNTY PUBLIC WORKS
ENGINEERING DIVISION

DESIGNED:	CAD/C3D:	CHECKED:	DATE:
RL	RL	DW	07/30/2021

MORTON HEIGHTS-2021

MORTON TRAIL-GRADING

PROJECT NO: **RS-MOR-001** SHEET NO: **115**

C:\AUTOCAD\PROJECTS\MORTON HEIGHTS\PLAN SET\MORTON-HEIGHTS MORTON-TRAIL-GRADING 04 DEC 2018.DWG LAST PLOTTED 7/30/2021 12:44 PM

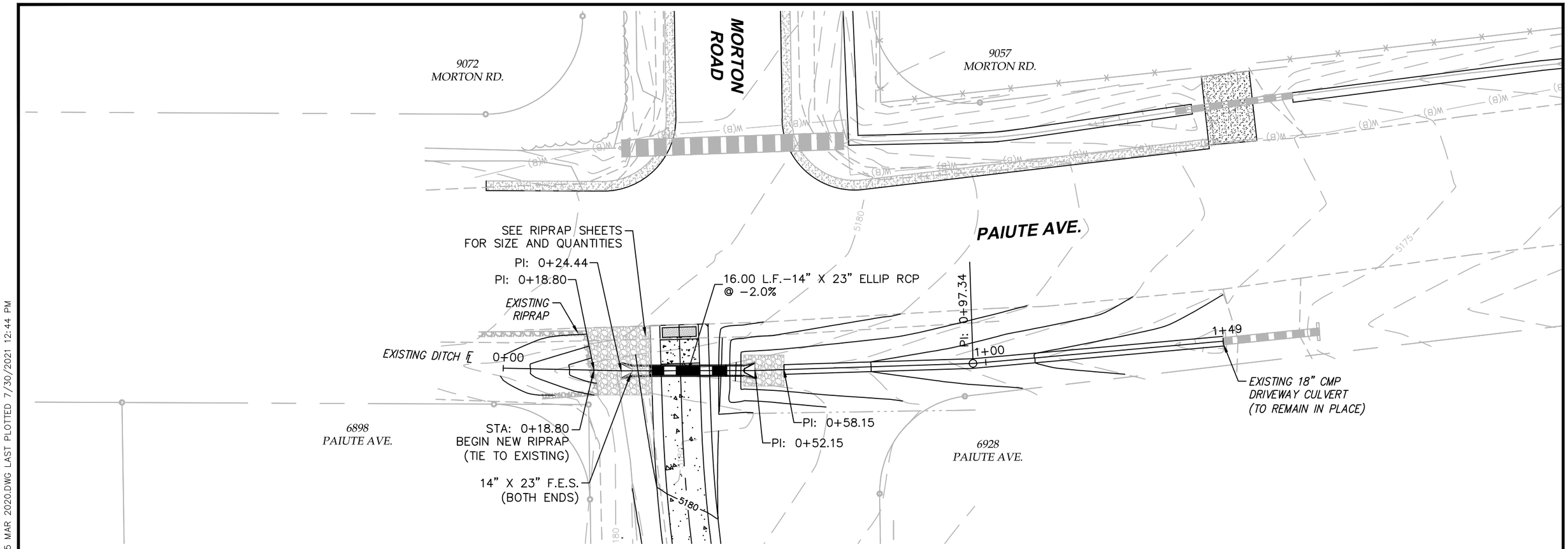

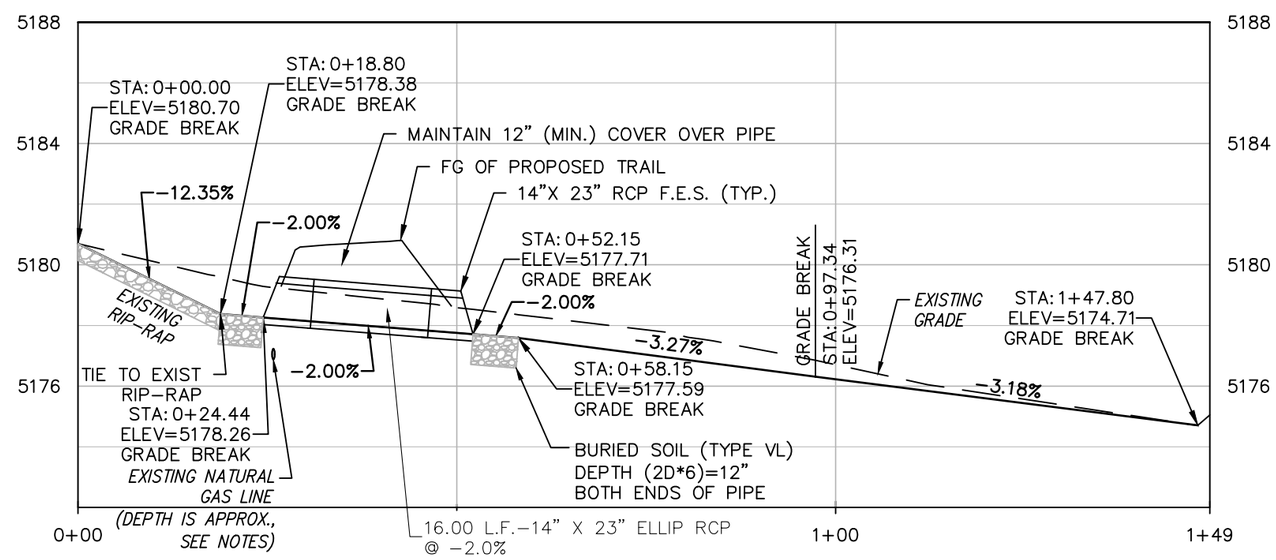

NOTES:

1. SUBSURFACE UTILITY INVESTIGATION (S.U.E.) WAS NOT PERFORMED ON THIS SECTION OF THE PROJECT.
2. CONTRACTOR SHALL CONTACT 811 FOR UTILITY MARKINGS PRIOR TO EXCAVATION.

N

0 20 40

HORIZONTAL SCALE: 1"=20'
VERTICAL SCALE: 1"=5'

FOR CONSTRUCTION

CALL UTILITY NOTIFICATION CENTER OF COLORADO
811
CALL 2–BUSINESS DAYS IN ADVANCE BEFORE YOU DIG, GRADE, OR EXCAVATE FOR THE MARKING OF UNDERGROUND MEMBER UTILITIES

REVISIONS:	NO.	DATE	REVISION DESCRIPTION:

BOULDER COUNTY PUBLIC WORKS
ENGINEERING DIVISION

DESIGNED:	CAD/C3D:	CHECKED:	DATE:
RL	RL	DW	07/30/2021

MORTON HEIGHTS–2021
MORTON-TRAIL-STORM
PROJECT NO: **RS-MOR-001** SHEET NO: **116**

C:\AUTOCAD\PROJECTS\MORTON HEIGHTS\PLAN SET\MORTON-HEIGHTS MORTON-TRAIL-STORM 05 MAR 2020.DWG LAST PLOTTED 7/30/2021 12:44 PM

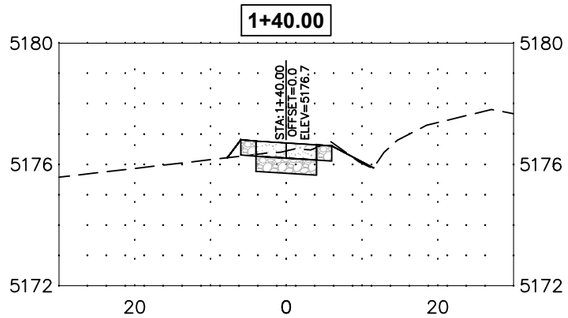

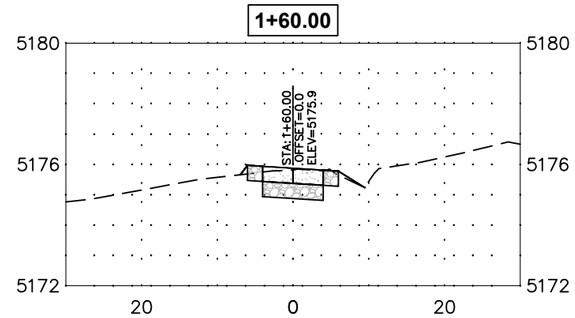

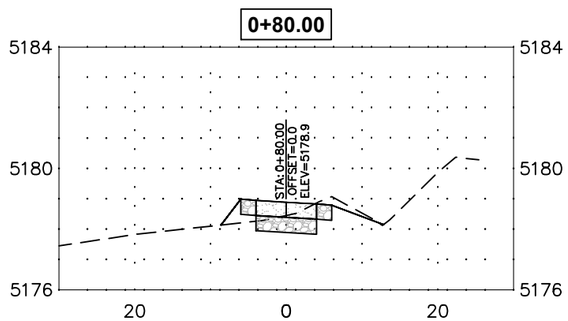

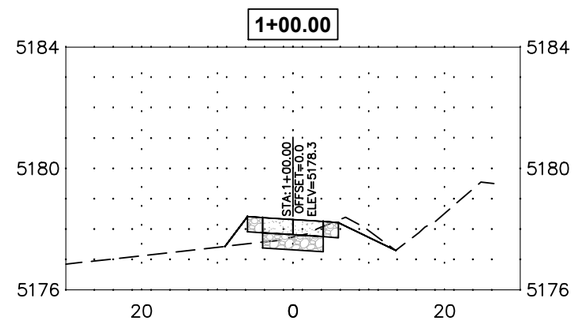

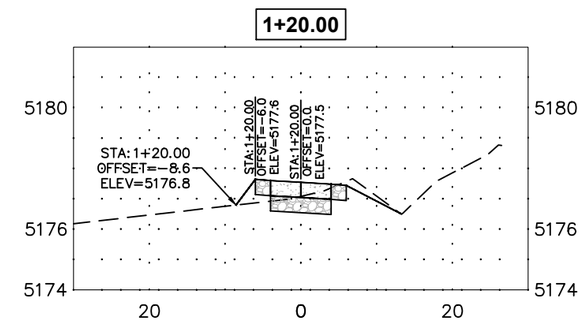

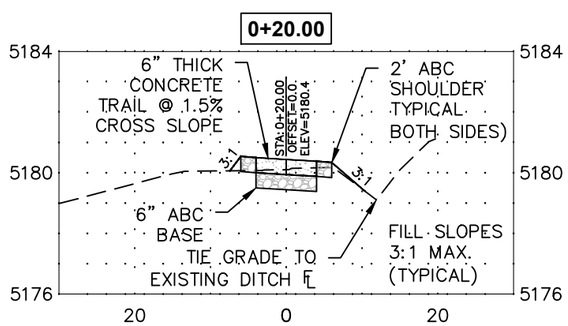

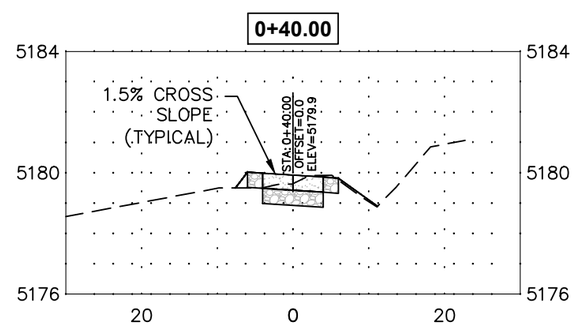

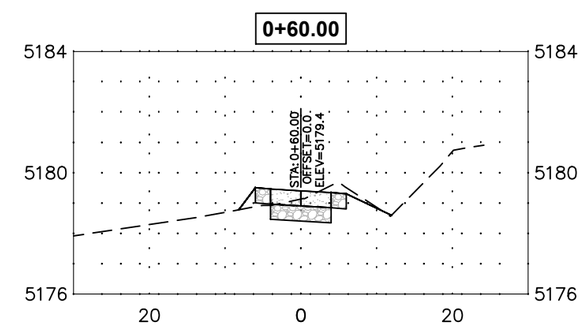

0 20 40

HORIZONTAL SCALE: 1"=20'
VERTICAL SCALE: 1"=5'

FOR CONSTRUCTION

CALL UTILITY NOTIFICATION CENTER OF COLORADO

811

CALL 2-BUSINESS DAYS IN ADVANCE BEFORE YOU DIG, GRADE, OR EXCAVATE FOR THE MARKING OF UNDERGROUND MEMBER UTILITIES

REVISIONS:	NO.	DATE	REVISION DESCRIPTION:

BOULDER COUNTY PUBLIC WORKS
ENGINEERING DIVISION

DESIGNED:	CAD/C3D:	CHECKED:	DATE:
RL	RL	DW	07/30/2021

MORTON HEIGHTS-2021

MORTON TRAIL-SECTIONS

PROJECT NO: **RS-MOR-001** SHEET NO: **117**

C:\AUTOCAD\PROJECTS\MORTON HEIGHTS\PLAN SET\MORTON-HEIGHTS-MORTON-TRAIL SECTIONS 05 DEC 2018.DWG LAST PLOTTED 7/30/2021 12:44 PM

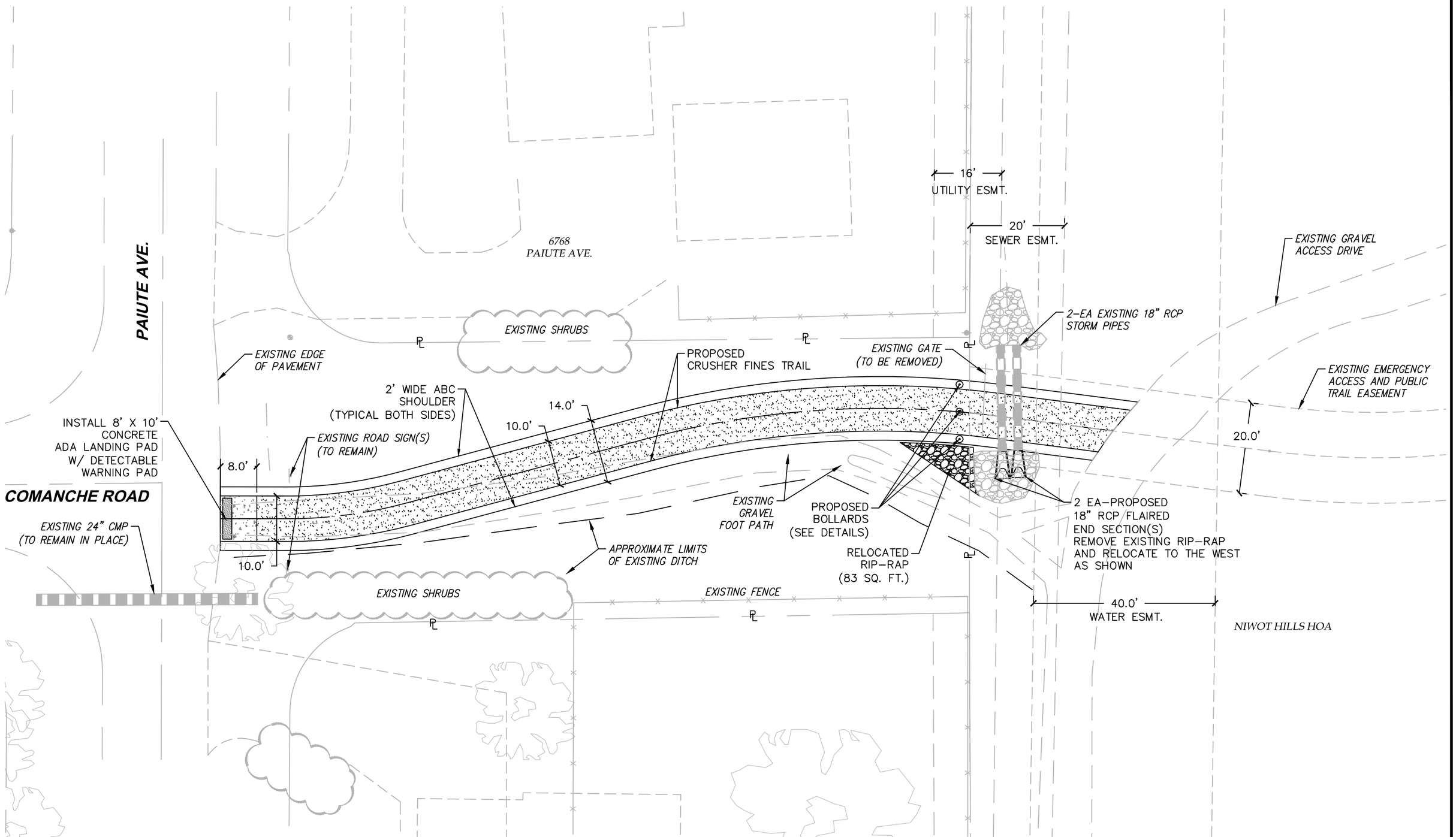

0 20 40

HORIZONTAL SCALE: 1"=20'

N

FOR CONSTRUCTION

CALL UTILITY NOTIFICATION CENTER OF COLORADO

811

CALL 2-BUSINESS DAYS IN ADVANCE BEFORE YOU DIG, GRADE, OR EXCAVATE FOR THE MARKING OF UNDERGROUND MEMBER UTILITIES

REVISIONS:	NO.	DATE	REVISION DESCRIPTION:

BOULDER COUNTY PUBLIC WORKS
ENGINEERING DIVISION

DESIGNED:	CAD/C3D:	CHECKED:	DATE:
RL	RL	DW	07/30/2021

MORTON HEIGHTS-2021

COMANCHE RD-TRAIL

PROJECT NO: **RS-MOR-001** SHEET NO: **118**

C:\AUTOCAD\PROJECTS\MORTON HEIGHTS\PLAN SET\MORTON-HEIGHTS-COMANCHE-RD 27 NOV 2018.DWG LAST PLOTTED 7/30/2021 12:44 PM

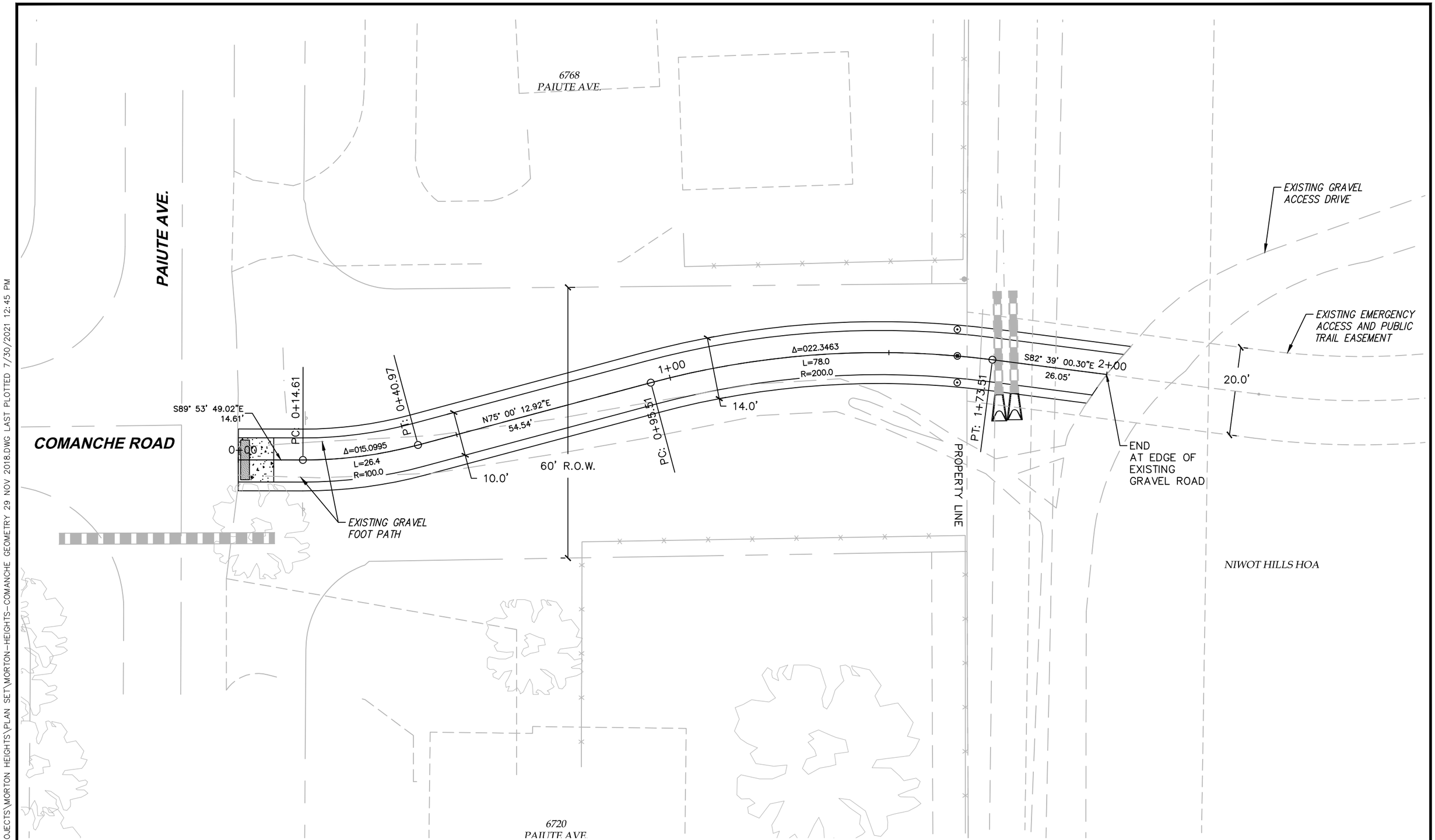

0 20 40
HORIZONTAL SCALE: 1"=20'

N

FOR CONSTRUCTION

CALL UTILITY NOTIFICATION CENTER OF COLORADO
811
CALL 2-BUSINESS DAYS IN ADVANCE BEFORE YOU DIG, GRADE, OR EXCAVATE FOR THE MARKING OF UNDERGROUND MEMBER UTILITIES

REVISIONS: NO.	DATE	REVISION DESCRIPTION:

BOULDER COUNTY PUBLIC WORKS
ENGINEERING DIVISION

DESIGNED:	CAD/C3D:	CHECKED:	DATE:
RL	RL	DW	07/30/2021

MORTON HEIGHTS-2021
COMANCHE TRAIL-GEOMETRY
PROJECT NO: **RS-MOR-001** SHEET NO: **119**

C:\AUTOCAD\PROJECTS\MORTON HEIGHTS\PLAN SET\MORTON-HEIGHTS-COMANCHE GEOMETRY 29 NOV 2018.DWG LAST PLOTTED 7/30/2021 12:45 PM

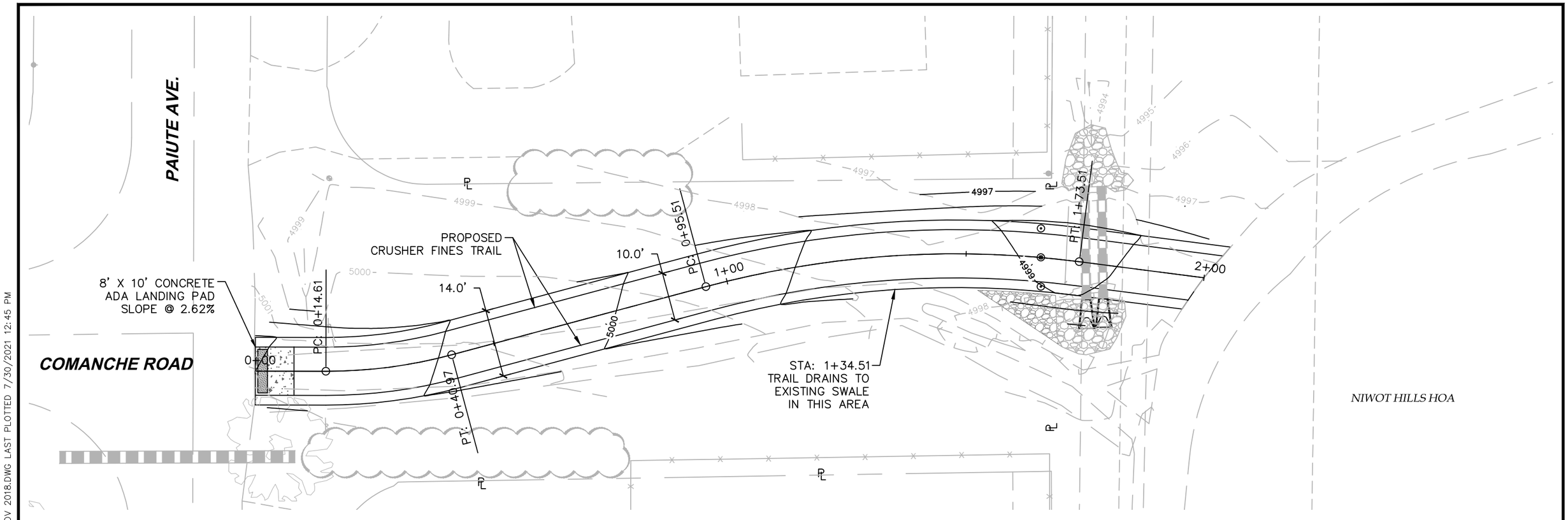

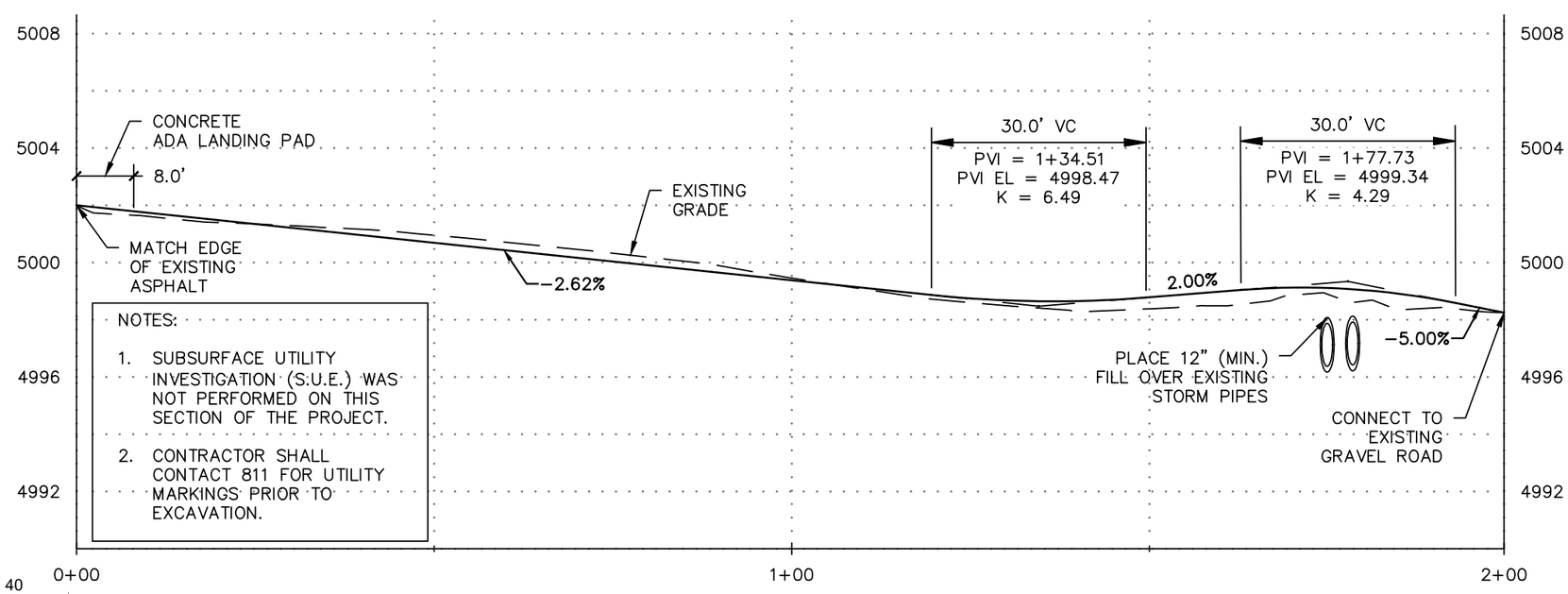

NOTES:

1. SUBSURFACE UTILITY INVESTIGATION (S.U.E.) WAS NOT PERFORMED ON THIS SECTION OF THE PROJECT.
2. CONTRACTOR SHALL CONTACT 811 FOR UTILITY MARKINGS PRIOR TO EXCAVATION.

0 20 40

HORIZONTAL SCALE: 1"=20'
VERTICAL SCALE: 1"=5'

N

FOR CONSTRUCTION

CALL UTILITY NOTIFICATION CENTER OF COLORADO
811
CALL 2-BUSINESS DAYS IN ADVANCE BEFORE YOU DIG, GRADE, OR EXCAVATE FOR THE MARKING OF UNDERGROUND MEMBER UTILITIES

REVISIONS: NO.	DATE	REVISION DESCRIPTION:

BOULDER COUNTY PUBLIC WORKS
ENGINEERING DIVISION

DESIGNED:	CAD/C3D:	CHECKED:	DATE:
RL	RL	DW	07/30/2021

MORTON HEIGHTS-2021

COMANCHE TRAIL-GRADING

PROJECT NO: **RS-MOR-001** SHEET NO: **120**

C:\AUTOCAD\PROJECTS\MORTON HEIGHTS\PLAN SET\MORTON-HEIGHTS-COMANCHE-RD-GRADING 27 NOV 2018.DWG LAST PLOTTED 7/30/2021 12:45 PM

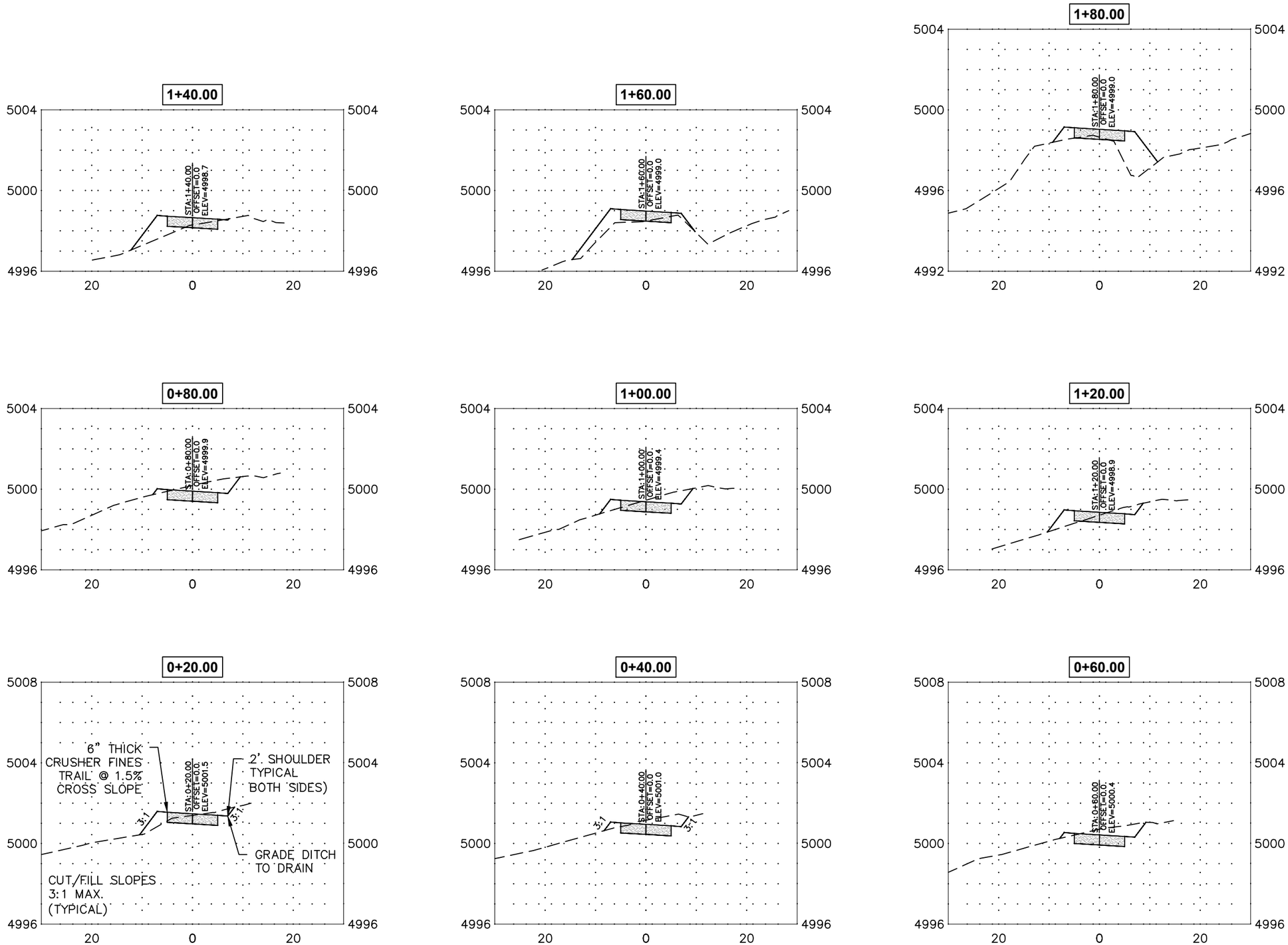

0 20 40

HORIZONTAL SCALE: 1"=20'
VERTICAL SCALE: 1"=5'

FOR CONSTRUCTION

CALL UTILITY NOTIFICATION CENTER OF COLORADO
811
CALL 2-BUSINESS DAYS IN ADVANCE BEFORE YOU DIG, GRADE, OR EXCAVATE FOR THE MARKING OF UNDERGROUND MEMBER UTILITIES

REVISIONS:	NO.	DATE	REVISION DESCRIPTION:

BOULDER COUNTY PUBLIC WORKS
ENGINEERING DIVISION

DESIGNED:	CAD/C3D:	CHECKED:	DATE:
RL	RL	DW	07/30/2021

MORTON HEIGHTS-2021

COMANCHE TRAIL-SECTIONS

PROJECT NO: **RS-MOR-001** SHEET NO: **121**

C:\AUTOCAD\PROJECTS\MORTON HEIGHTS\PLAN SET\MORTON-HEIGHTS-COMANCHE SECTIONS 29 NOV 2018.DWG LAST PLOTTED 7/30/2021 12:45 PM

TRAFFICGUARD DIRECT, INC.
P.O. BOX 201
GENEVA, IL 30134
TOLL FREE: 1-877-727-7347
FAX: (800) 817-7194
www.trafficguard.net

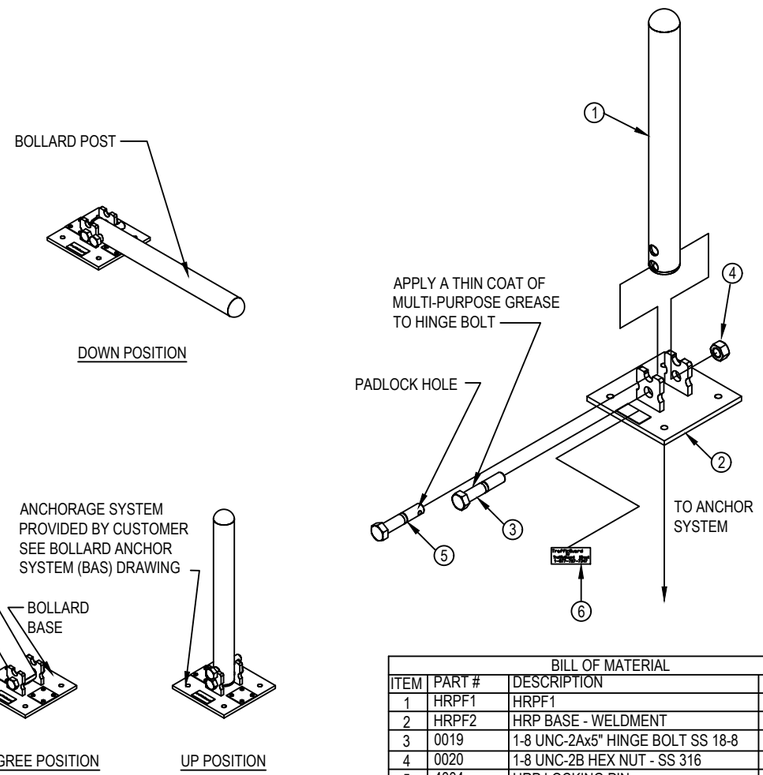

BILL OF MATERIAL			
ITEM	PART #	DESCRIPTION	QTY.
1	HRPF1	HRPF1	1
2	HRPF2	HRP BASE - WELDMENT	1
3	0019	1-8 UNC-2Ax5" HINGE BOLT SS 18-8	1
4	0020	1-8 UNC-2B HEX NUT - SS 316	1
5	4004	HRP LOCKING PIN	1
6	0105	LABEL	1

NOTES:
1. INSTALLATION TO BE COMPLETED IN ACCORDANCE WITH MANUFACTURER'S SPECIFICATIONS.
2. ALL DIMENSIONS ARE CONSIDERED TRUE AND REFLECT MANUFACTURER'S SPECIFICATIONS.
3. DO NOT SCALE DRAWING.
4. CONTRACTOR'S NOTE: FOR PRODUCT AND COMPANY INFORMATION VISIT www.CADdetails.com/info REFERENCE NUMBER 4209-005.

(D) ROUND POST

MODEL HRP36 - TRAFFICGUARD® ROUND POST, ASSEMBLY DETAILS

4209-005 REVISION DATE 04/06/2016

TRAFFICGUARD DIRECT, INC.
P.O. BOX 201
GENEVA, IL 30134
TOLL FREE: 1-877-727-7347
FAX: (800) 817-7194
www.trafficguard.net

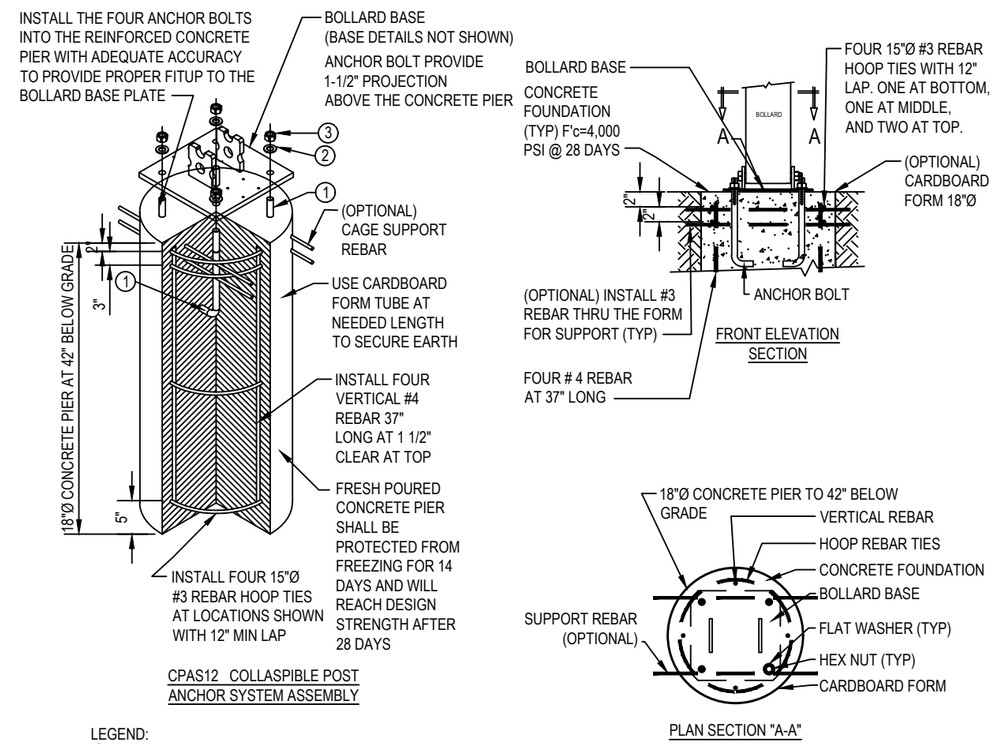

LEGEND:
1. Ø1/2" x 12" TYPE L ANCHOR BOLT-H.D.G.
2. Ø1/2" TYPE A FLAT NARROW WASHER GALVANIZED STEEL
3. Ø1/2" HEX NUT GALVANIZED STEEL

NOTES:
1. THIS IS A GUIDELINE FOR ESTIMATING, SITE SPECIFIC CONDITIONS SHOULD BE VERIFIED.
2. INSTALLATION TO BE COMPLETED IN ACCORDANCE WITH MANUFACTURER'S SPECIFICATIONS.
3. ALL DIMENSIONS ARE CONSIDERED TRUE AND REFLECT MANUFACTURER'S SPECIFICATIONS.
4. DO NOT SCALE DRAWING.
5. CONTRACTOR'S NOTE: FOR PRODUCT AND COMPANY INFORMATION VISIT www.CADdetails.com/info REFERENCE NUMBER 4209-005A.

(E) ROUND POST

MODEL HRP36 - TRAFFICGUARD® ROUND POST, FOOTING / ANCHOR SYSTEM DETAILS

4209-005A REVISION DATE 04/06/2016

NOTE: ANY SUBSTITUTION OF BOLLARD MANUFACTOR MUST BE APPROVED BY THE PROJECT ENGINEER, PRIOR TO INSTALL.

FOR CONSTRUCTION

CALL UTILITY NOTIFICATION CENTER OF COLORADO
811
CALL 2-BUSINESS DAYS IN ADVANCE BEFORE YOU DIG, GRADE, OR EXCAVATE FOR THE MARKING OF UNDERGROUND MEMBER UTILITIES

REVISIONS: NO.	DATE	REVISION DESCRIPTION:

BOULDER COUNTY PUBLIC WORKS
ENGINEERING DIVISION

DESIGNED:	CAD/C3D:	CHECKED:	DATE:
RL	RL	DW	07/30/2021

MORTON HEIGHTS-2021
LOCKABLE BOLLARD DETAIL
PROJECT NO: **RS-MOR-001** SHEET NO: **122**

C:\AUTOCAD\PROJECTS\MORTON HEIGHTS\PLAN SET\MORTON-HEIGHTS-BOLLARDS 26 FEB 2018.DWG LAST PLOTTED 7/30/2021 12:45 PM

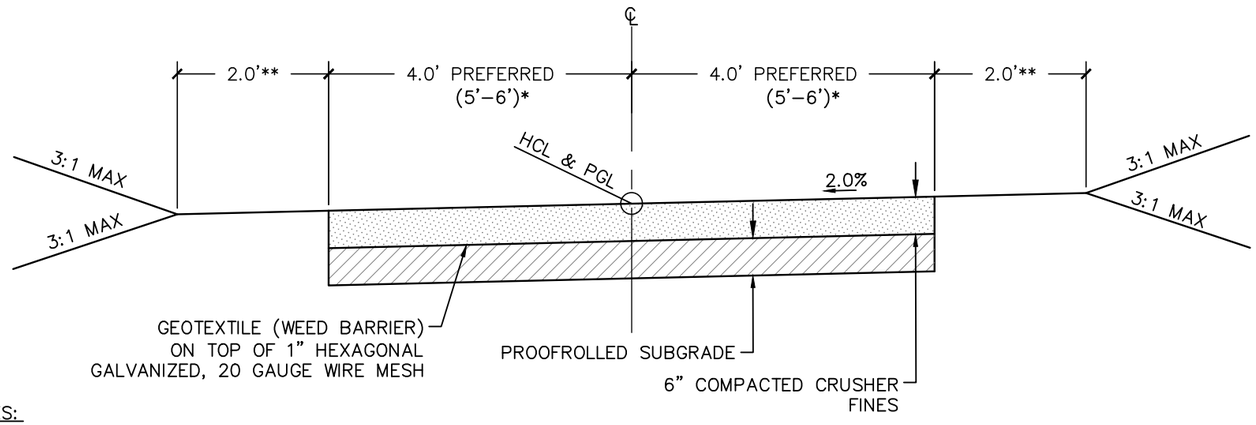

NOTES:

* GREATER WIDTHS MAY BE REQUIRED IN AREAS OF HEAVY TRAIL USAGE.

** SHOULDER SLOPE SHOULD BE 2.0% WITH A MAXIMUM ALLOWED SLOPE OF 6:1

ANCHOR HEXAGONAL WIRE AND GEOTEXTILE TO THE GROUND, PRIOR TO COVERING WITH CRUSHER FINES.

AVOID LEAVING SHARP EDGES OR LOOSE ENDS EXPOSED THAT CAN CAUSE INJURIES.

(A) SHARED USE PATH TYPICAL SECTION SIDE SLOPES 3:1 MAX.

SCALE: 1"=2'

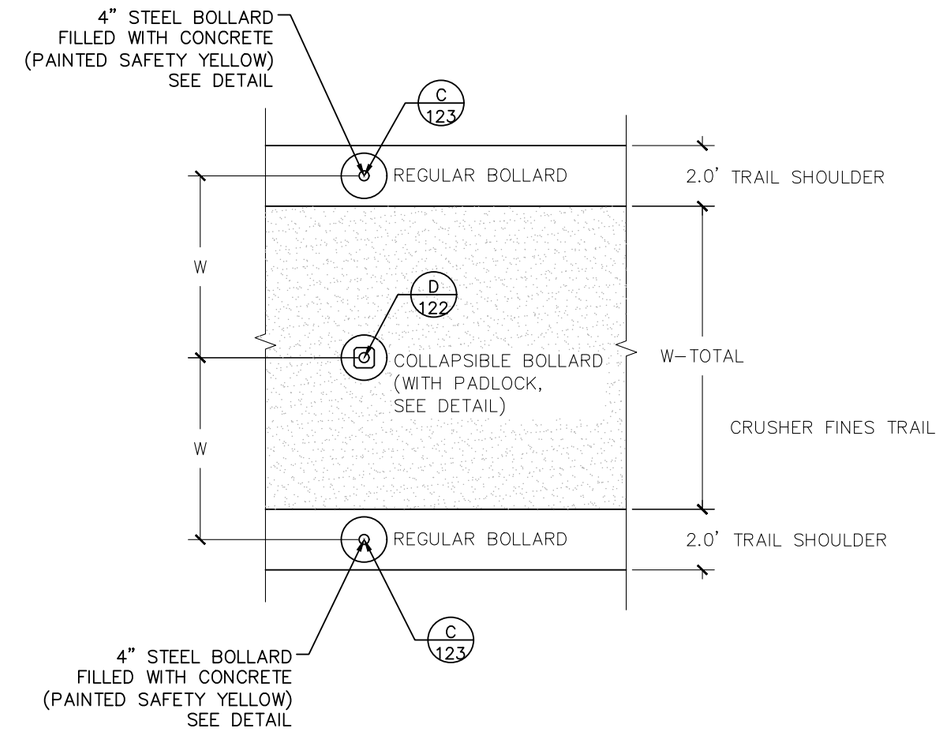

(B) BOLLARD PLACEMENT TRAIL CONNECTIONS -PLAN VIEW

SCALE: 1"=5'

NOTES:

W = 6' COMANCHE TRAIL CONNECTION
W = 5' MORTON TRAIL CONNECTION

W–TOTAL = 10' – COMANCHE

W–TOTAL = 8' – MORTON

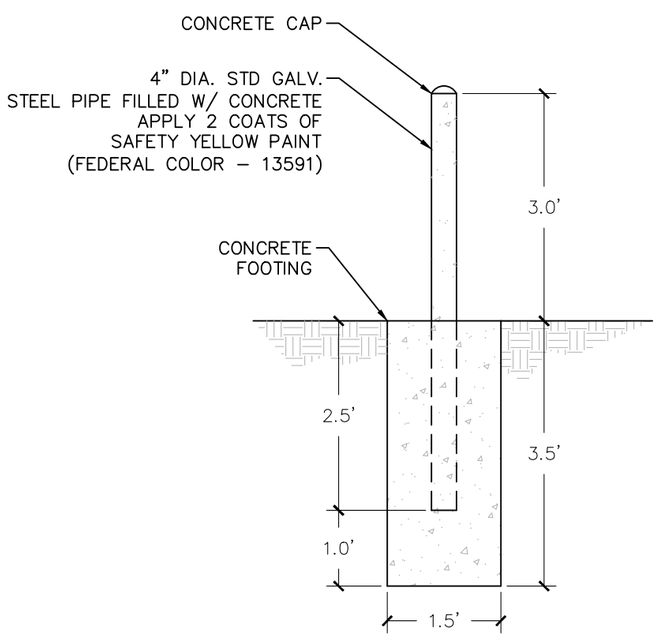

(C) BOLLARD INSTALLATION DETAIL

SCALE: 1"=2'

FOR CONSTRUCTION

CALL UTILITY NOTIFICATION CENTER OF COLORADO
811
CALL 2–BUSINESS DAYS IN ADVANCE BEFORE YOU DIG, GRADE, OR EXCAVATE FOR THE MARKING OF UNDERGROUND MEMBER UTILITIES

REVISIONS: NO.	DATE	REVISION DESCRIPTION:

BOULDER COUNTY PUBLIC WORKS
ENGINEERING DIVISION

DESIGNED:	CAD/C3D:	CHECKED:	DATE:
RL	RL	DW	07/30/2021

MORTON HEIGHTS–2021

TRAIL DETAILS

PROJECT NO: **RS-MOR-001** SHEET NO: **123**

C:\AUTOCAD\PROJECTS\MORTON HEIGHTS\PLAN SET\MORTON-HEIGHTS-TRAIL DETAILS 05 FEB 2019.DWG LAST PLOTTED 7/30/2021 12:45 PM

SWMP Template (Plan Sheets) for Projects with 1 Acre or More of Disturbance (5/6/2021)

1. SITE DESCRIPTION

The Contractor shall comply with all CDOT contractual requirements and all requirements associated with the CDPS-SCP on this project. The SWMP Administrator for Construction shall update the SWMP to reflect current project site conditions.

A. PROJECT SITE LOCATION:
Location or address of construction office:

The project site is located within the Morton Heights Subdivision, within Unincorporated Boulder County Colorado.

The Morton Heights subdivision is located east of the Town of Niwot, Colorado and just south of Niwot Road.

Location or address of construction office: No on-site construction office is planned for this project.

B. PROJECT SITE DESCRIPTION:

This construction site is located with an existing subdivision which was originally platted in several filings, beginning in the early 1960's. The subdivision is primarily 0.75 acre lots, each lot has a house, some small out buildings and a grass yard.

With this construction project, the County will be improving the existing storm sewer system by installing new concrete storm pipes, inlets and curb/gutters. Once the stormwater improvements have been constructed, several of the subdivision roads (community use roads) will be re-paved.

Additional improvements include improved sidewalk connections to the local elementary school. The sidewalk improvements will improve access from the school to the local trail system. Improved sidewalk connections will allow students and parents to walk to school, rather than drive.

Construction activities will include:

- Clearing/grubbing of the existing site.
- Relocation of some existing utilities, which will be conducted by the respective utility owners.
- Grading for the new sidewalks, roadside ditches, curb and gutters.
- Excavation for the new concrete storm sewer components that include new pipe, storm manholes, and storm inlets.
- Paving operations will be the final step of construction on this project.

C. PROPOSED SCHEDULE FOR SEQUENCE FOR MAJOR CONSTRUCTION ACTIVITIES:
Stabilize all areas that are not paved or landscaped through establishment of vegetation cover.

- Several existing utilities will be relocated by the owners of each utility. Erosion control will be installed as needed by each utility owner.
- Clearing/grubbing will take place in all areas that require excavation/fill.
- Excavation within the limits of the receiving irrigation ditch, Boulder/Whiterock Ditch Company, will take place outside of the ditch company's irrigation season. Stormwater runoff will be accepted by the Boulder/Whiterock irrigation ditch which matches the current surface water runoff pattern.
- Storm sewer improvements will be installed.
- Roadside ditches will be graded to improve stormwater runoff.
- Concrete sidewalks and curb & gutter will be formed and poured.
- Existing asphalt roadways will be milled and overlaid or reclaimed through the use of full depth reclamation and new hot mix asphalt will be installed.

D. ACRES OF DISTURBANCE:
1. Total area of construction site (LOC (PERMITTED AREA)): **4.36** acres
2. Total area of proposed disturbance (LDA): **2.30** acres
3. Total area of seeding: **0.72** acres
4. Total area of pre-project impervious surface: **129,717** sq. ft.
5. Total area of final impervious surface: **136,410** sq. ft.

D. EXISTING SOIL DATA:

USDA soil types for this project and the Morton Heights subdivision are:

- CoB - Colby Silty Clay Loam – 1 to 3 percent slopes
- CoC – Colby Silty Clay Loam – 3-5 percent slopes
- WoC – Weld-Colby Complex – 3-5 percent slopes

Primarily silty clay soils should reduce soil erosion to a point.

Riprap mixed with soil is being used on roadside ditches to prevent soil erosion at pipe outlets and on 2' flat bottom roadside ditches that have enough slope to cause soil erosion. Roadside ditches were designed using Urban Drainage Flood Control District swale stability charts which address flow rates and longitudinal ditch slope.

Data Source(s): https://websoilsurvey.sc.egov.usda.gov/App/HomePage.htm

F. EXISTING VEGETATION, INCLUDING PERCENT OF VEGETATIVE COVER: During design, the SWMP Administrator for Design in consultation with the Engineer will determine if the SWMP Administrator for Design or the SWMP Administrator for Construction will conduct the Vegetation Transects. If the site is disturbed, an Adequate Reference Site(s) may be utilized, refer to the permit.

Pre-Construction Date of survey: _____ Percent Existing Vegetative Cover: _____

Description of existing vegetation: _____

Method for determining percent vegetative cover: _____

Include a map or table showing transect locations, photos documenting pre-Construction vegetative cover, and methodology used to determine existing vegetative cover to SWMP tab 17:

Post-Construction Date of survey: _____ Percent Vegetative Cover: _____

Description of vegetation: _____ **Date of CDPS-SCP Closure:** _____

The method used to determine pre-construction percent cover shall be used to determine post construction percent cover.

Include map or table showing transect locations, photos documenting post-Construction vegetative cover, and methodology used to determine existing vegetative cover to SWMP tab 17:

G. POTENTIAL POLLUTANTS SOURCES: Refer to Potential Pollutant Sources in SWMP Section 4A. The SWMP Administrator for Construction shall prepare a list of all potential pollutants and their locations in accordance with subsection 107.25.

H. RECEIVING WATER:

- Outfall locations: West side of Morton Heights subdivision – The existing stormwater runoff takes several above ground paths, none of which are well defined or capable of carrying large amounts of surface water.
- A new 24"x 38" elliptical RCP will outfall at the Boulder White Rock Ditch in virtually the same outfall location as the historic path mentioned above. The elliptical concrete pipe will allow the stormwater to be contained below ground, therefore improving the drainage patterns of the west side of the subdivision.
- East side of the subdivision: Outfall point will remain as is. The east side of the subdivision currently drains to a roadside ditch which runs parallel to Niwot Rd. The outfall will be improved by removing existing clogged/damaged storm pipes, re-grading the existing roadside ditch in order to handle the 5 year storm event and eliminating two residential driveway access points and storm pipe crossings that currently block stormwater runoff flow from the eastern side of the subdivision.
- Names of immediate receiving water(s) on site: Both East and West sides of Morton Heights subdivision drain to
  Boulder White Rock Irrigation Ditch.
- Ultimate receiving water(s): Both sides of Morton Heights ultimately drain to Panama Reservoir No. 1 which overflows to Boulder Creek. Panama Reservoir is listed on the CDPHE website as not having enough information to assess for 303d. Boulder Creek is listed on the CDPHE web site as a 303d designated waterway.
- Horizontal distance to nearest ultimate receiving water from project: 14,300 feet (2.7 miles).
- Description of all stream crossings located within the Construction Site Boundary:
  There are no stream crossings within the Morton Heights subdivision.

Location	Stream Name	Description Of Any Disturbed Upland Areas
N/A	N/A	N/A

I. ALLOWABLE NON-STORMWATER DISCHARGES:

Discharge Description	Site Map #	Method Statement (Location)
Uncontaminated Springs		
Concrete Washout Water (in-ground washout structure)#		
Landscape Irrigation Return Flows		
Discharges from Diversions of State Waters		
Emergency Fire Fighting		

#Concrete washout water associated with the washing of concrete tools and concrete mixer chutes can be discharged to the ground if site is managed accordingly to prevent the water from leaving the site as surface runoff or reaching receiving waters.

J. DESCRIPTION OF DRAINAGE PATTERNS FROM THE SITE:

Both East and West sides of Morton Heights subdivision drain to the Boulder White Rock Irrigation Ditch. The SWMP and construction drawings have been reviewed by the Engineering consultant hired by the ditch company.

K. ALTERNATIVE DIVERSION CRITERIA: When applicable, The Contractor is to provide a method statement based on data provided by the Hydraulic Engineer. The alternative diversion must be approved by CDPHE's Water Quality Control Division prior to implementation. The diversion method must be designate to minimize the discharge of pollutants and prevent the potential for pollution or degradation to state waters as a result of the diverted flow through the diversion structure. In addition, the alternative diversion method must minimize the discharge of pollutants throughout the installation, implementation and removal of the diversion.]

L. ALTERNATIVE TEMPORARY STABILIZATION SCHEDULE: [If applicable, provide a description of the alternative temporary stabilization schedule. If temporary stabilization exceeds the 14-day schedule, then the SWMP must document the constraints necessitating the alternative schedule, provide the alternative schedule, and identify all the locations where the alternative schedule is applicable on the site map.]

2. SITE MAP COMPONENTS:

Pre-construction:

A. PROJECT CONSTRUCTION POTENTIAL SITE BOUNDARIES: Shown in the SWMP plans.

B. FLOW ARROWS THAT DEPICT STORMWATER FLOW DIRECTIONS ON-SITE, RUN-ON AND RUNOFF DIRECTION: Shown in the SWMP plans.

C. ALL AREAS OF GROUND SURFACE DISTURBANCE: Shown in the SWMP plans.

D. AREAS OF CUT AND FILL: Shown in the grading and roadway typical sections.

C. AREAS USED FOR STORING AND STOCKPILING OF MATERIALS, STAGING AREAS (field trailer, fueling, etc.) and LOCATIONS OF ALL WASTE ACCUMULATION and BATCH PLANTS INCLUDING MASONRY MIXING STATIONS:

Areas used for stockpiling, staging, fueling and mixing were not know at the time of design. The contractor shall be responsible for updating the SWMP to address areas needed for operations necessary to complete the project.

D. LOCATION OF ALL STRUCTURAL CONTROL MEASURES IDENTIFIED IN THE SWMP:
Shown in the SWMP plans.

G. LOCATION OF NON-STRUCTURAL CONTROL MEASURES AS APPLICABLE IN THE SWMP:
Shown in the SWMP plans.

H. SPRINGS, STREAMS, WETLANDS, DIVERSIONS, AND OTHER STATE WATERS, INCLUDING AREAS THAT REQUIRE PRE-EXISTING VEGETATION BE MAINTAINED WITHIN 50 FEET OF A RECEIVING WATER:
No streams, springs, or wetlands are within the existing Morton Heights subdivision.

I. LOCATIONS OF ALL STREAM CROSSING LOCATED WITHIN THE CONSTRUCTION SITE BOUNDARY:
There are no stream crossings within the subdivision/construction site.

J. PROTECTION OF TREES, SHRUBS, SENSITIVE HABITAT, AND CULTURAL RESOURCES:
There are not trees, shrubs or cultural resources that will need to be protected.

K. LOCATIONS WHERE ALTERNATIVE TEMPORARY STABILIZATION SCHEDULES APPLY:
N/A

3. QUALIFIED STORMWATER MANAGERS:

A. SWMP ADMINISTRATOR FOR DESIGN: CDOT Certified Individual responsible for developing SWMP Plan Sheets and SWMP Site Maps during the design phase.

Name/Title	Contact Information	Certification #
Allison Kelly, P.E.	303-441-3900 akelly@bouldercounty.org	

B. SWMP ADMINISTRATOR FOR CONSTRUCTION: (As defined in Section 208) The Contractor shall designate a SWMP Administrator for Construction upon accepting co-permittee of the permit. The SWMP Administrator for Construction shall become the operator for the SWMP and assume responsibility for all design changes to the SWMP implementation and maintenance in accordance to 208.03, the SWMP shall remain the property of CDOT. The SWMP Administrator for Construction shall be responsible for implementing, maintaining and revising SWMP, including the title and contact information. The activities and responsibilities of the SWMP Administrator for Construction shall address all aspects of the project's SWMP. (Update the information below for each new SWMP Administrator for Construction) (A copy of TECS Certification must be included in the SWMP.)

Name/Title	Contact Information (phone & email)	Certification #	Start Date	Engineer Approval

C. EROSION CONTROL INSPECTOR: (As defined in Section 208) The Contractor may designate an Erosion Control Inspector. The Erosion Control Inspector shall complete duties in accordance with subsection 208.03 (c) (Copy of TECS Certification must also be included in the SWMP.)

Name/Title	Contact Information (phone & email)	TECS Certification #	Start Date	Engineer Approval

D. PERMANENT STABILIZATION SUBJECT MATTER EXPERT: This qualified individual will be either a Regional Environmental Staff member, or an Independent Contractor Controller (Independent Assurance Program). This expert is a project team leader responsible for ensuring project adherence to requirements of the 207 and 212 Project Special Provisions as follows, and will be available for questions regarding permanent stabilization requirements.

https://www.codot.gov/programs/environmental/assets/construction-phase-inspection-and-verification-checklist-for-successful-roadside-revegetation]

1. Review the Topsoil Management Plan and the Permanent Stabilization Site Maps.
2. Attend the Environmental Pre-Construction Conference.
3. Coordinate the Site Pre-Vegetation Conference.
4. Review and recommend approval of products.
5. Review and recommend approval of the Quantities Verification Prerequisite.
6. Attend the Substantial Landscape Completion Walkthrough.
7. Attend the Final Landscape Completion Walkthrough.

Name/Title	Contact Information

4. STORMWATER MANAGEMENT CONTROLS FOR FIRST CONSTRUCTION ACTIVITIES

THE CONTRACTOR SHALL PERFORM THE FOLLOWING:

A. POTENTIAL POLLUTANT SOURCES:
Evaluate, identify, locate and describe all potential sources of pollutants at the site in accordance with subsection 107.25, CDPS-SCP and place in the SWMP. All control measures related to potential pollutants shall be shown on the SWMP Site Map by the Contractor's SWMP Administrator for Construction.

B. OFFSITE DRAINAGE (RUN ON WATER):
Describe and record control measures on the SWMP Site Map that have been implemented to address off site run-on water in accordance with subsection 208.03.

C. VEHICLE TRACKING CONTROL:
Control measures shall be implemented in accordance with subsection 208.04.

D. PERIMETER CONTROL:
1. Perimeter control shall be established as the first item on the SWMP to prevent the potential for pollutants leaving the construction site boundaries, entering the stormwater drainage system, or discharging to state waters. Perimeter control shall be in accordance with subsection 208.04
2. Perimeter control may consist of berms, silt fence, erosion logs, existing landforms, or other control measures as approved.

5. DURING CONSTRUCTION

RESPONSIBILITIES OF THE SWMP ADMINISTRATOR FOR CONSTRUCTION: Considered a "living document", the SWMP is continuously reviewed and modified throughout the construction phases. During construction, SWMP Administrator for Construction shall add, update, or amend the items A-G below as needed in accordance with subsection 208.03.

During construction, indicate how items have or were not addressed during design are being handled in construction. If items are covered in other sections of the SWMP, indicate below what section the discussion takes place.

A. MATERIALS HANDLING AND SPILL PREVENTION AND RESPONSE PLAN: prior to construction commencing the Contractor shall submit a Spill Response Plan, see subsection 208.06. Materials handling shall be in accordance with subsection 208.06.

B. OTHER CDPS PERMITS: List applicable CDPS permits associated with the permitted site and activities.

C. STOCKPILE MANAGEMENT: Shall be done in accordance with subsections 107.25 and 208.07

E. CONCRETE WASHOUT: Concrete washout water or waste from field laboratories and paving equipment shall be contained in accordance with subsection 208.05.

F. SAW CUTTING: Shall be done in accordance with subsections 107.25, 208.04, 208.05

G. STREET SWEEPING: Shall be done in accordance with subsection 208.04

6. INSPECTIONS

A. Water Quality Inspections shall be in accordance with subsection 208.03(c).

B. Permanent Stabilization Inspections shall be in accordance with subsections 207.03 and 212.05.

7. CONTROL MEASURE MAINTENANCE

Maintenance shall be in accordance with subsection 208.04(f).

8. RECORD KEEPING

Records shall be kept in accordance with subsection 208.03(d).

9. INTERIM, PERMANENT STABILIZATION and LONG TERM STORMWATER MANAGEMENT

The Contractor shall comply with all interim stabilization and permanent stabilization requirements in accordance with subsection 208.04(e).

A. SEEDING PLAN:
The following seed mix(es) and rates are for drill seeding method as shown on the Permanent Stabilization Site Maps shall be used:

COMMON NAME	BOTANICAL NAME	LBS. PLS PER ACRE
Side Oats Grama (Vaughn)	Bouteloua Curtipendula	2.74
Blue Grama (Native, Alama, or Hachita)	Bouteloua Gracilis	0.84
Buffalograss (Native)	Buchloe Dactyloides	9.33
Western Wheatgrass (Arriba)	Pascopyrum Smithii	3.96
Western Wheatgrass (Native)	Pascopyrum Smithii	3.96
Little Bluestem (Cimarron or Pastura)	Schizachyrium Scoparium	1.74
Green Needlegrass (Lodorm or Native)	Stipa Viridula	2.31
	Total	24.88

B. SEEDING APPLICATION METHOD: The following seeding methods shall be used for all areas shown on the Permanent Stabilization Site Maps. Soil compaction shall be minimized for areas where permanent stabilization will be achieved through vegetative cover.

SEEDING METHOD (subsection 212.05)	ACRE
Seeding (Native) Drill, CDOT Pay Item 212-00706	
Seeding (Native) Hydraulic, CDOT Pay Item 212-00707	
Seeding (Native) Broadcast, CDOT Pay Item 212-00708	0.72
Seeding (Wetland) Drill, CDOT Pay Item 212-00709	
Seeding (Wetland)Hydraulic, CDOT Pay Item 212-00710	
Seeding (Wetland) Broadcast, CDOT Pay Item 212-00711	
TOTAL	

SOIL STABILIZATION METHODS: Minimum soil stabilization methods (attached mulch) for all disturbances to receive seeding:

1. Apply certified weed free hay or certified weed free straw and mechanically crimp into the soil in combination with natural mulch tackifier in accordance with Section 213.
2. Install Soil Retention Blankets in accordance with Standard Plan M-216-1 and Section 2

D. SPECIAL REQUIREMENTS:

1. Soil amendments, seedbed preparation, and permanent stabilization mulching shall be accomplished within four working days of placing the topsoil on the de-compacted civil subgrades. If placed topsoil is not mulched with permanent stabilization mulch within four working days, the Contractor shall complete interim stabilization methods in accordance with subsection 208.04(e) at no additional cost to the County.
2. Complete permanent stabilization mulching within 24 hours of hydraulic application of native seed.
3. The Contractor shall submit a proposed Permanent Stabilization Phasing Plan to the Engineer for approval showing how implementation of SWMP Permanent Stabilization Plans will minimize damage to seeded areas.

E. SOIL AMENDMENT REQUIREMENTS: Minimum amendment material requirements for all disturbances to receive seeding.

0.72 - Total Acres of Seeding (Native) Broadcast

	Pay Item	Description	Amount/ Acre	Units	Total For This Method
Seeding (Native) Broadcast Pay Item 212-00708	212-00700	Organic Fertilizer (low N)		Pounds	
	212-00701	Compost (Mechanically Applied)		CY	
	212-00703	Humate		Pounds	
	212-00704	Mycorrhizae		Pounds	
	212-00705	Elemental Sulfur		Pounds	

F. Permanent Stabilization Application Under Structures: Under structures shade patterns should be considered and the use of Median Cover Material (Stone) or other stabilized options with an approved Project Special Provision should be used. See SWMP Site Map for locations.

G. RESEEDING OPERATIONS/CORRECTIVE STABILIZATION:
Prior to partial acceptance.

1. All seeded areas shall be reviewed during the 7-day inspections by the SWMP Administrator for Construction and or Erosion Control Inspector for bare soils caused by surface or wind erosion. Bare areas caused by surface or gully erosion, blown away mulch, etc. shall be re-graded, seeded, and have the designated mulching applied as necessary, at no additional cost to the project.
2. The Contractor shall maintain seeding/mulch/tackifier/blanket/TRM, mow to control weeds in the seeded areas until Partial Acceptance of the stormwater construction work.

H. LOCATION AND DESCRIPTION OF PLANNED PERMANENT CONTROL MEASURES:

Is Permanent Water Quality Required. Yes _____ No __X__.

10. PRIOR TO PROJECT FINAL ACCEPTANCE

A. When directed by the Engineer, removal and disposal of temporary control measures shall be included in the cost of work.
B. At the end of the project, all ditch checks shall consist of either temporary erosion logs (or equivalent) or permanent riprap.
C. All storm drains shall be cleaned prior to the Final Acceptance of the project. If required, include work in 202-04002 Clean Culvert.

Refer to Specification 208.10 for Items to be completed prior to requesting partial acceptance of water quality work.

11. NARRATIVES

Control Measure Matrixes During Construction:

1. Control measure narratives have been included for the CDOT Standard Specifications and Standard Plan M-208 and M-216 along with any non-standard control measures approved during the design process. If a Non-Standard Control Measure not included in the SWMP is proposed and approved by the Engineer the SWMP Administrator for Construction shall do the following: Place an "X" in the column for non-standard and complete a Non-Standard Control Measure Specification and Narrative covering the what, when, where and why the control measure is being used shall be add to the SWMP. The appropriate "X" shall also be added to the implementation phase(s).
2. The SWMP Administrator for Construction shall place an "X" in the column In Use On-Site when the control measure has been installed.
3. A "B" in the Initial Activities Column indicates that the control measure shall be installed **before** construction activity starts. Locations and quantities will be discussed during the Environmental Pre-Construction Conference with the Regional Water Pollution Control Manager.

STRUCTURAL Control Measures that may be potentially used on the project for erosion and sediment control; practices may include, but are not limited to the following:

APPLICATION, CONTROL MEASURE	NARRATIVE	M- 208 STANDARD or "X" for NON-STANDARD	IN USE ON SITE	CONTROL MEASURE IMPLEMENTATION PHASE		
				INITIAL ACTIVITIES	INTERIM ACTIVITIES	PERMANENT STABILIZATION
PROTECTION OF EXISTING WETLANDS *Fence (plastic) and erosion logs*	Fence (plastic) shall be placed in combination with erosion logs to prevent encroachment of construction traffic and sediment into state waters prior to start of construction disturbances. Fence (plastic) shall be placed adjacent to the wetlands; erosion logs shall be placed between the plastic fence and disturbance area. Logs shall be placed to direct flows away from or filter water running into wetlands from disturbance areas.					
PROTECTION OF EXISTING TREES/LANDSCAPING *Fence (plastic)*	Fence (plastic) shall be used in areas indicated in the plans to prevent encroachment of construction traffic and sediment for the protection of sensitive habitat, mature trees and/or existing landscaping prior to start of construction disturbances.					
CHECK DAM/DITCH CHECK *Erosion log, silt berm, silt dike, rock check dam*	Placed in ditches immediately upon completion of ditch grading to reduce velocity of runoff in ditch. For existing ditches, place prior to start of construction disturbances.	M-208		X	X	
Storm Drain Inlet Protection In Paved Roadways (Type 1, 2 and 3 as shown on M-208-1, sheet 5 of 11)	Manufactured storm drain inlet protection placed prior to construction disturbances as detailed in M-208-1, to protect existing inlets or immediately upon completion of new inlets to prevent sediment from entering the inlet throughout construction.	M-208		B	X	
Storm Drain Inlet Protection In Native Seed Areas (M-604 Standard Inlets Type C and D)	Erosion logs or aggregate bags placed around inlet grate to prevent sediment from entering inlet. Place prior to construction disturbances to protect existing inlets or immediately upon completion of new inlets.	M-208		B	X	
CULVERT INLET/OUTLET PROTECTION *Erosion logs, aggregate bags*	Placed at mouth of culvert inlets and over top of culvert at inlet and outlet where disturbance may be occurring adjacent to pipe to prevent sediment laden water from entering pipe or drainage. Place prior to the start of construction disturbances.	M-208		B	X	
TYPE C, TYPE D AND TYPE 13 PROTECTION *Erosion logs, aggregate bags, erosion bales*	Placed around inlet grate or slope and ditch paving to prevent sediment from entering inlet. Place prior to the start of construction disturbances.	M-208		B	X	
STOCKPILE PROTECTION *Temporary berm, erosion logs, aggregate bags**	Placed within specified distance, in accordance with subsection 208.06, from toe to contain sediment around stockpile. *Aggregate bags are easily moved and replaced for access during the work day. Place prior to start of stockpiling, increase control as the stockpile increases size.	M-208				
TOE OF FILL PROTECTION *Erosion logs, temporary berm, silt fence, topsoil windrow**	Place prior to slope/embankment work to capture sediment and protect and delineate undisturbed areas. *Can be used to stockpile topsoil for salvage.	M-208				
PERIMETER CONTROL *Erosion logs, silt fence, temporary berm, topsoil windrow**	Placed prior to construction commencing to address potential run-on water from off site, and to divert around disturbed area. *Can be used to stockpile topsoil for salvage.	M-208		B	X	

SEDIMENT CONTROL/ SLOPE CONTROL Silt fence, erosion logs	Placed on the contour of a slope to contain and slow down construction runoff. Place prior to the start of construction disturbances.	M-208		**B**	**X**	
TEMPORARY SEDIMENT TRAP	Used to capture sediment laden runoff from disturbed areas < 5 acres during construction. Place prior to the start of construction disturbances. Outlets that withdraw water from or near the surface may be installed when discharging from basins and impoundments.	M-208				
EMBANKMENT PROTECTION OR TEMPORARY SLOPE DRAIN	Placed as a conduit or chute to drain runoff down slope and to prevent erosion of slope.	M-208				
OUTLET PROTECTION Riprap, or approved other	Material placed as an energy dissipater to prevent erosion at outlet structure.	M-601-12				
CONCRETE WASHOUT In-ground or fabricated	Construction control, used for waste management of concrete and concrete equipment cleaning. Place prior to the start of concrete activities.	M-208		**X**	**X**	
VEHICLE TRACKING PAD	Source control, placed to prevent tracking of sediment from disturbed area to offsite surface. Place prior to the start of construction disturbances.	M-208		**B**	**X**	
Engineered SEDIMENT BASIN	Constructed early in the project, prior to storm sewer/ditches and in accordance with 208.05(p) to capture storm flow. Outlet structure and/or outfall shall be modified for temporary sediment control using an approved non-standard detail. Outlets that withdraw water from or near the surface shall be installed when discharging from basins and impoundments, unless infeasible					

NON-STRUCTURAL Control Measures that may be potentially used on the project for erosion and sediment control; practices may include, but are not limited to:
Erosion control devices are used to limit the amount of soil loss on site. Sediment control devices are designed to capture sediment on the project site. Construction controls are control measures related to construction access and staging. Control Measure locations are indicated on the SWMP Site Map.

* **Use of vegetative buffer strip requirements.** The CDPHE Water Quality Control Division Technical Memorandum dated August 27, 2015 clarifies the requirements for utilization of existing vegetation as a buffer type of sediment control measure, while maintaining compliance with the CDPS permit for Stormwater Discharges Associated with Construction Activity – CDPS Permit No. COR4000000. In general, the division does not recommend that vegetated buffers be implemented as a sediment removal control measure for runoff from disturbed areas at construction sites, unless implemented as a "finishing" component of a treatment train comprised of additional, adequate up-gradient Control
Measures. The entire memorandum can be found at:
https://www.colorado.gov/pacific/sites/default/files/Vegetative%20Buffer%20Memo.pdf

APPLICATION, CONTROL MEASURE	NARRATIVE	M-STANDARD or "For NON-STANDARD	IN USE ON SITE	CONTROL MEASURE IMPLEMENTATION PHASE		
				INITIAL ACTIVITY	INTERIM ACTIVITIES	PERMANENT STABILIZATION
** VEGETATIVE BUFFER STRIP Fence (plastic)*	Finishing component for filtering sediment-laden runoff from disturbance area. Area within CDOT ROW or temporary easement to be identified on SWMP prior to construction starting.					
GRADING APPLICATIONS (LANDFORM)	Existing or created landforms may be used as a control measure if they prevent sediment from entering or leaving the disturbance area. If a landform directs flow of water to a concentrated outfall point, the outfall point shall be protected to prevent erosion. Area to be identified on SWMP prior to construction starting.	M-208				
TOPSOIL MANAGEMENT STOCKPILE/SALVAGE Windrow or stockpile	Prior to any site disturbance work commencing, existing topsoil shall be scraped to a depth six inches or as specified, and placed in stockpiles or windrows. Upon completion of final grading, topsoil shall be evenly distributed over embankment to a depth of six inches or as specified.	M-208		**X**	**X**	
SURFACE ROUGHENING / GRADING TECHNIQUES	Temporary stabilization of disturbance and to minimize wind and erosion.				**X**	
SEEDING (TEMPORARY)	Temporary stabilization used for over wintering of disturbance or used to control erosion for areas scheduled for future construction.					
BONDED FIBER MATRIX or MULCHING (HYDRAULIC)	Not to be used in areas of concentrated flows, i.e. ditch lines. To be for either Interim or Permanent Stabilization placed as a surface cover for erosion control. May be used as surface cover when work is temporarily halted and as approved by the Engineer for stockpiles.					

Straw or Hay MULCH/MULCH TACKIFIER	Interim or Permanent Stabilization placed as a surface cover for erosion control and or seeding establishment. To be installed as Interim Stabilization as a surface cover when work is temporarily halted and as approved by the Engineer				X	X
SPRAY-ON MULCH BLANKET (Not to be used in areas of concentrated flows, i.e. ditch lines.)	Interim or Permanent Stabilization placed as a surface cover for erosion control and or seeding establishment. To be installed as temporary surface cover when work is temporarily halted and as approved by the Engineer					
SEEDING PERMANENT (NATIVE PERENNIAL)	Permanent Stabilization of disturbance and to reduce runoff and control erosion on disturbed areas.					X
SOIL RETENTION BLANKET (SRB)	Permanent Stabilization of disturbance and to reduce runoff and control erosion on disturbed areas.	M-216				X
TURF REINFORCEMENT MAT (TRM)	Permanent Stabilization of disturbance and to reduce runoff and control erosion on disturbed areas. Placed in channels or on slopes for erosion control, channel liner and seeding establishment.	M-216				
Sweeping	Source control, used to remove sediment tracked onto paved surfaces and to prevent sediment from entering drainage system. Sweep daily and at the end of the construction shift as needed. Kick brooms shall not be permitted.				X	X
OTHER						

12. TABULATION OF STORMWATER QUANTITIES

A. Control Measure sediment removal and disposal shall be paid for as: 208 Removal and Disposal of Sediment (Equipment) and 208 Removal and Disposal of Sediment (Labor). All other control measure maintenance shall be included in the cost of the control measure.

https://www.codot.gov/business/designsupport/cdot-construction-specifications/2019-construction-specifications/project-special-provision-work-sheets?b_start:int=20

PSP Spec.	Pay Item	Description	Pay Unit	Initial Const	Interim Const.	Permanent Stabilization	*Total Quantity
	202-04002	Clean Culvert	Each				1
	203-01500	Blading	Hour				
	203-01550	Dozing	Hour				
	203-01594	Combination Loader	Hour				
	207-00700	Topsoil (Onsite)	CY				0
	207-00706	Seeding Media	CY				
	207-00702	Topsoil (Offsite)	CY				310
	207-00703	Topsoil (wetland)	CY				
	207-00704	Subgrade Soil Preparation	SY				
	208-00001	Silt Dike	LF				
	208-00004	Silt Berm	LF				
	208-00012	Erosion Log Type 1 (9 inch)	LF				
	208-00002	Erosion Log Type 1 (12 inch)	LF				1425
	208-00013	Erosion Log Type 1 (20 Inch)	LF				
	208-00007	Erosion Log Type 2 (8 Inch)	LF				
	208-00008	Erosion Log Type 2 (12 Inch)	LF				
	208-00009	Erosion Log Type 2 (18 Inch)	LF				
	208-00011	Erosion Bales (Weed Free)	Each				
	208-00015	Sand Bag	LF				
	208-00030	Sediment Basin	Each				
	208-00053	Storm Drain Inlet Protection (Type I)(84 Inch)	Each				
	208-00054	Storm Drain Inlet Protection (Type II)	Each				
	208-00055	Rigid Inlet Protection Device	Each				
	208-00056	Storm Drain Inlet Protection (Type III)	Each				
	208-00057	Storm Drain Inlet Protection (Type I)(144 Inch)	Each				
	208-00058	Storm Drain Inlet Protection (Type I)(204 Inch)	Each				
	208-00060	Temporary Slope Drains	LF				
	208-00070	Vehicle Tracking Pad	Each				1
	208-00071	**Maintenance Aggregate (Vehicle Tracking Pad)	CY				
	208-00075	Pre-fabricated Vehicle Tracking Pad	Each				
	208-00103	Removal and Disposal of Sediment (Labor)	Hour				40
	208-00105	Removal and Disposal of Sediment (Equipment)	Hour				40
	208-00106	Sweeping (Sediment Removal)	Hour				40
	208-00107	Removal of Trash	Hour				
	208-00207	Erosion Control Management (ECM)	Day				75

	208-00300	Temporary Berm	LF				
	208-00301	Temporary Diversion	LF				
	212-00700	Organic Fertilizer	Pounds				
	212-00701	Compost (Mechanically Applied)-	CY				
	212-00702	Biotic Soil Amendments (Hydraulic Applied)	Pounds				
	212-00703	Humate	Pounds				
	212-00704	Mycorrhizae	Pounds				
	212-00705	Elemental Sulfur	Pounds				
	212-00706	Seeding (Native) Drill	Acre				
	212-00707	Seeding (Native) Hydraulic	Acre				
	212-00708	Seeding (Native) Broadcast	Acre				0.72
	212-00709	Seeding (Wetland) Drill	Acre				
	212-00710	Seeding (Wetland) Hydraulic	Acre				
	212-00711	Seeding (Wetland) Broadcast	Acre				
	212-00009	Seeding (Temporary)	Acre				
	213-00002	Mulching (Weed Free Hay)	Acre				
	213-00003	Mulching (Weed Free)	Acre				
	213-00004	Mulching (Weed Free Straw)	Acre				0.3
	213-00007	Mulching Wood Strand	Acre				
	213-00012	Spray-on Mulch Blanket	Acre				
	213-00013	Spray-on Mulch Blanket	LB				
	213-00020	Compost Blanket	SY				
	213-00061	Mulch Tackifier	LB				5
	213-00150	Bonded Fiber Matrix	Acre				
	213-00151	Bonded Fiber Matrix	LB				
	214-00008	Extended Landscape Preservation	LS				
	216-00101	Soil Retention Blanket (Straw/Coconut) (Photodegradable Class 1)	SY				
	216-00111	Soil Retention Blanket (Excelsior) (Photodegradable Class 1)	SY				
	216-00122	Soil Retention Blanket (Coconut) (Photodegradable Class 2)	SY				
	216-00201	Soil Retention Blanket (Straw/Coconut) (Biodegradable Class 1)	SY				1272
	216-00211	Soil Retention Blanket (Excelsior) (Biodegradable Class 1)	SY				
	216-00222	Soil Retention Blanket (Coconut) (Biodegradable Class 2)	SY				
	216-00301	Turf Reinforcement Mat (Class1)	SY				
	216-00302	Turf Reinforcement Mat (Class 2)	SY				
	216-00303	Turf Reinforcement Mat (Class 3)	SY				
	217-00000	Herbicide Treatment	SY				
	217-00020	Herbicide Treatment	Hour				
	610-00050	Median Cover Material (Stone)	Ton				
	607-11525	Fence (Plastic)	LF				
	615-00152	Erosion Protector (Special)	LF				
	700-70380	F/A Erosion Control	FA				1
	700-90026	F/A Landscaping	FA				

*It is anticipated that additional control measures and control measure quantities not shown on the SWMP Site Maps shall be required on the project for unforeseen conditions and replacement of items that are beyond their useful service life, see subsections 208.03 and 208.04. **Quantities for all control measures shown above are estimated, and have been increased for unforeseen conditions and normal control measure life expectancy.** Quantities shall be adjusted according to the conditions encountered in the field as directed and approved by the Engineer. Payment shall be for the actual work completed and material used.

**Pay Item 208-00071 is included for anticipated maintenance of vehicle tracking pads based on the service life of the control measure in the field. The use of the material shall be directed and approved by the Engineer.

*** F/A refers to CDOT's Force Account Pay Items.

13. BIOLOGICAL IMPACTS and DEWATERING

A. ENVIRONMENTAL IMPACTS:

1. Wetland Impacts: **NO**
2. Stream Impacts: **NO**
3. Threatened and Endangered Species:
"No species are anticipated to be impacted by the project."

H. DEWATERING: (Not covered under the CDPHE guidance document *Low Risk Discharge Guidance Discharges of Uncontaminated Groundwater to Land*):
https://www.colorado.gov/pacific/sites/default/files/WQ%20LOW%20RISK%20GW.pdf
1. Dewatering: Refer to other environmental permits in accordance with subsection 107.02 and the permits contained in Tab 16 of the SWMP.
2. If groundwater does not meet water quality standards for receiving water a separate CDPS Dewatering Permit shall be obtained by the Contractor from CDPHE in accordance with subsections 107.02 and 107.25.

14. NOTES:

A. The SWMP Administrator for Construction shall update the SWMP to reflect current project site conditions.

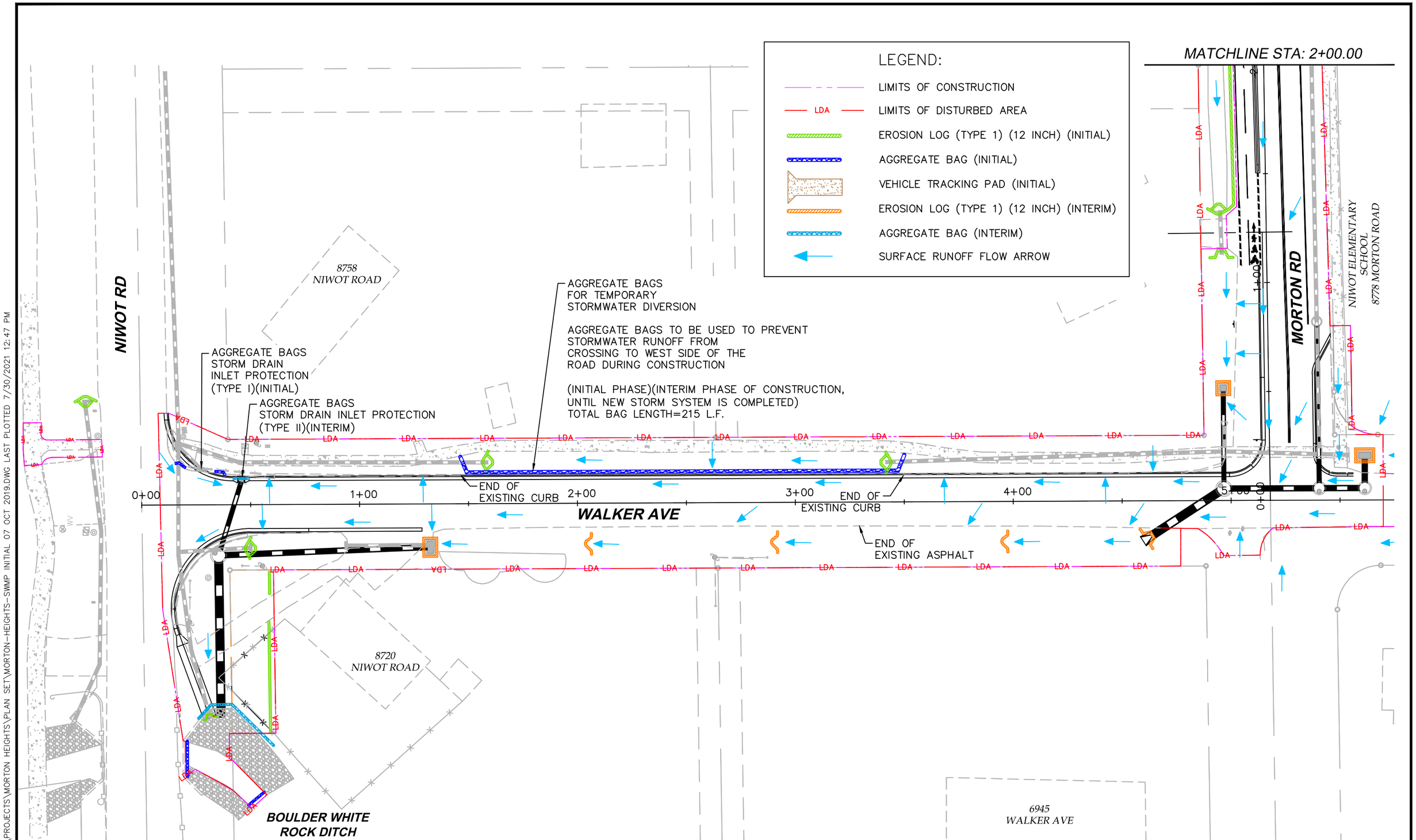

C:\AUTOCAD\PROJECTS\MORTON HEIGHTS\PLAN SET\MORTON-HEIGHTS-SWMP INITIAL 07 OCT 2019.DWG LAST PLOTTED 7/30/2021 12:47 PM

FOR CONSTRUCTION

CALL UTILITY NOTIFICATION CENTER OF COLORADO

811

CALL 2-BUSINESS DAYS IN ADVANCE BEFORE YOU DIG, GRADE, OR EXCAVATE FOR THE MARKING OF UNDERGROUND MEMBER UTILITIES

REVISIONS: NO.	DATE	REVISION DESCRIPTION:

BOULDER COUNTY PUBLIC WORKS
ENGINEERING DIVISION

DESIGNED:	CAD/C3D:	CHECKED:	DATE:
RL	RL	DW	07/30/2021

MORTON HEIGHTS-2021

SWMP-INITIAL & INTERIM (1)

PROJECT NO: **RS-MOR-001** SHEET NO: **132**

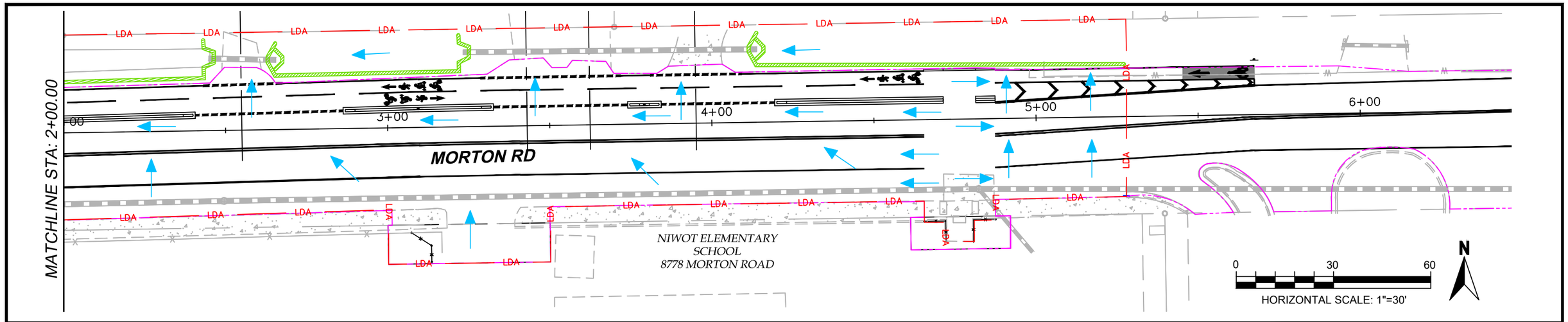

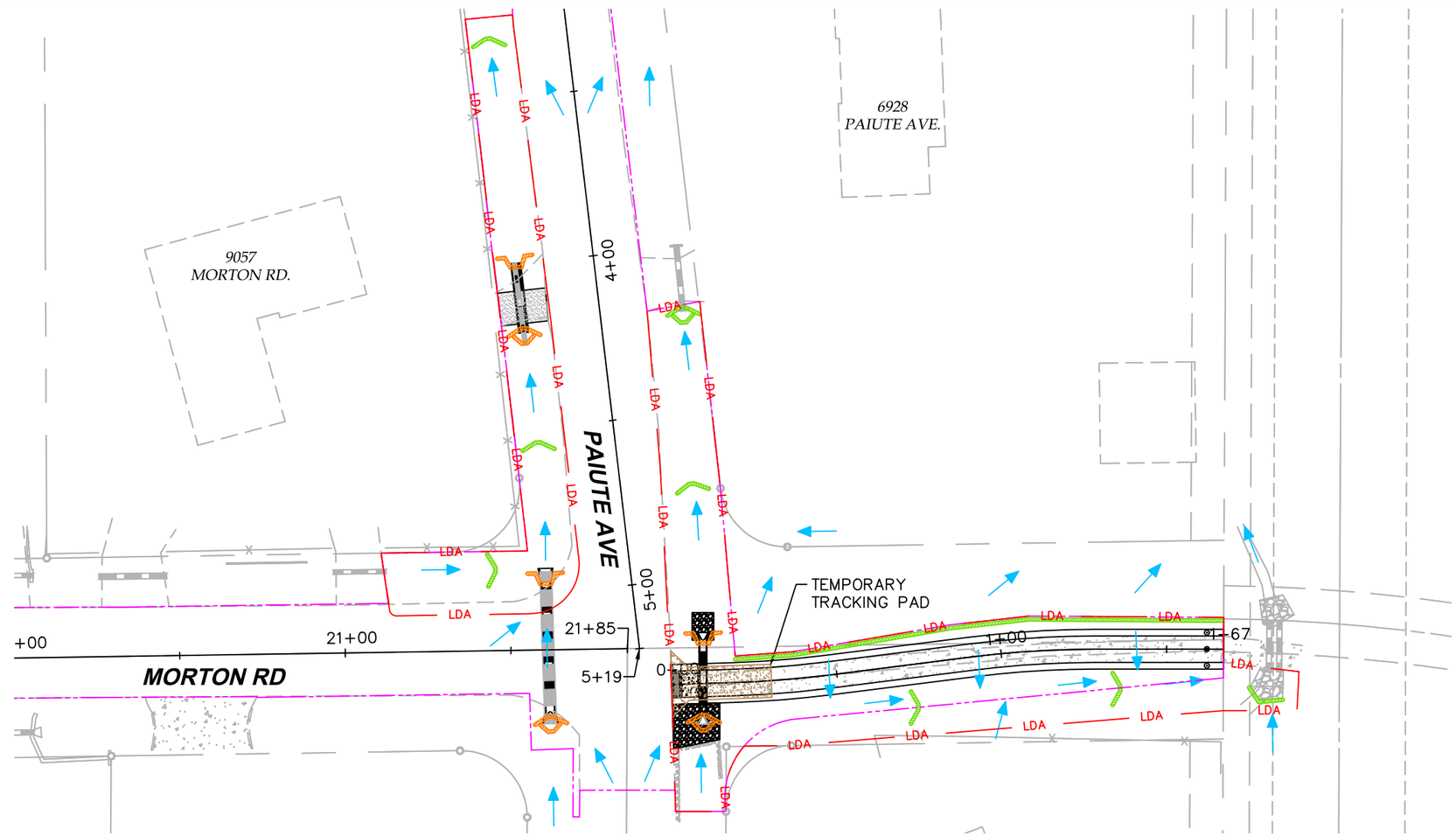

LEGEND:

- LIMITS OF CONSTRUCTION
- LDA — LIMITS OF DISTURBED AREA
- EROSION LOG (TYPE 1) (12 INCH) (INITIAL)
- AGGREGATE BAG (INITIAL)
- VEHICLE TRACKING PAD (INITIAL)
- EROSION LOG (TYPE 1) (12 INCH) (INTERIM)
- AGGREGATE BAG (INTERIM)
- SURFACE RUNOFF FLOW ARROW

0 40 80
HORIZONTAL SCALE: 1"=40'

N

FOR CONSTRUCTION

CALL UTILITY NOTIFICATION CENTER OF COLORADO
811
CALL 2-BUSINESS DAYS IN ADVANCE BEFORE YOU DIG, GRADE, OR EXCAVATE FOR THE MARKING OF UNDERGROUND MEMBER UTILITIES

REVISIONS:	NO.	DATE	REVISION DESCRIPTION:

BOULDER COUNTY PUBLIC WORKS
ENGINEERING DIVISION

DESIGNED:	CAD/C3D:	CHECKED:	DATE:
RL	RL	DW	07/30/2021

MORTON HEIGHTS-2021

SWMP-INITIAL & INTERIM (2)

PROJECT NO: **RS-MOR-001** SHEET NO: **133**

C:\AUTOCAD\PROJECTS\MORTON HEIGHTS\PLAN SET\MORTON-HEIGHTS-SWMP INITIAL 07 OCT 2019.DWG LAST PLOTTED 7/30/2021 12:47 PM

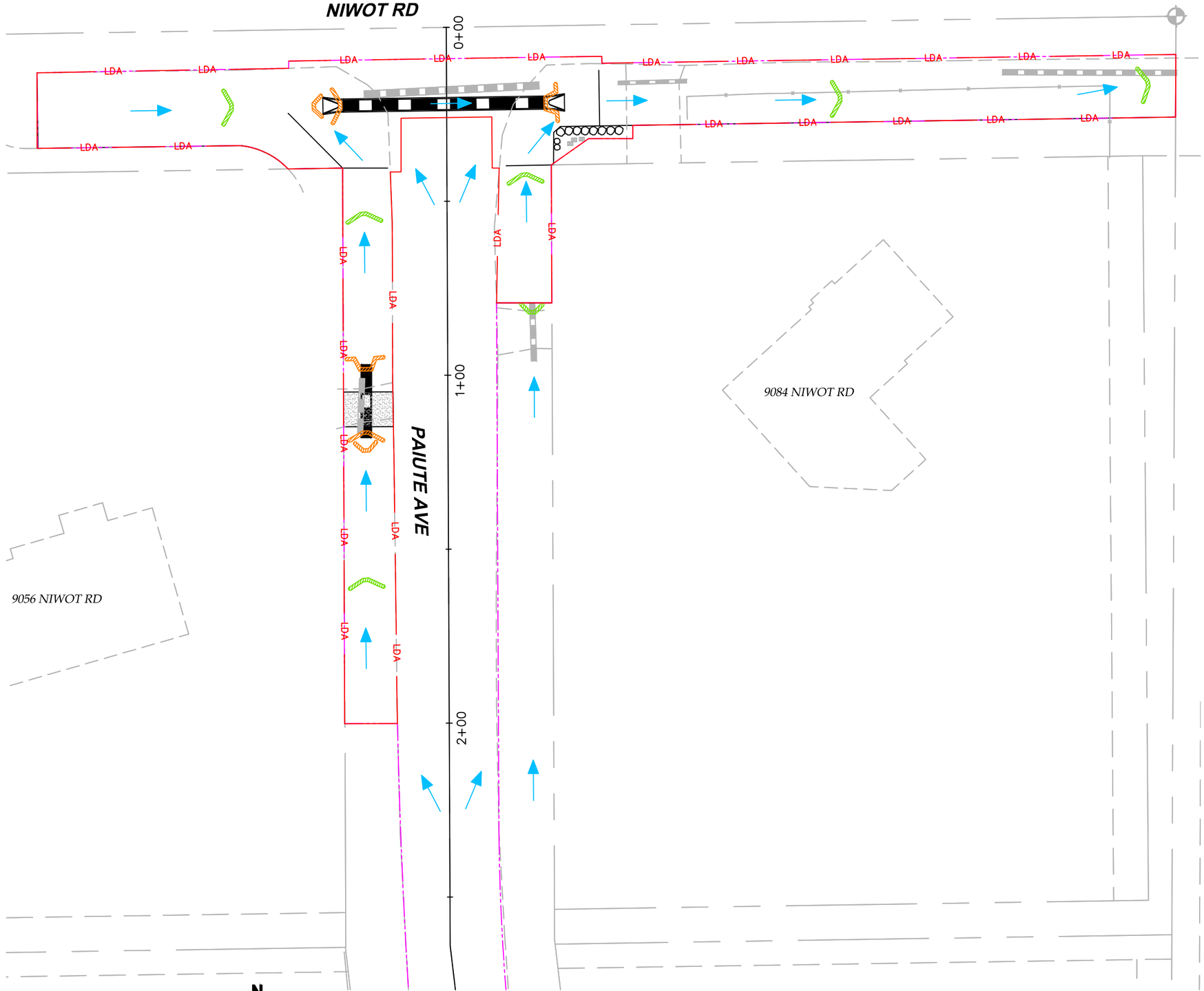

LEGEND:

- LIMITS OF CONSTRUCTION
- LDA — LIMITS OF DISTURBED AREA
- EROSION LOG (TYPE 1) (12 INCH) (INITIAL)
- AGGREGATE BAG (INITIAL)
- VEHICLE TRACKING PAD (INITIAL)
- EROSION LOG (TYPE 1) (12 INCH) (INTERIM)
- AGGREGATE BAG (INTERIM)
- SURFACE RUNOFF FLOW ARROW

0 30 60

HORIZONTAL SCALE: 1"=30'

N

FOR CONSTRUCTION

CALL UTILITY NOTIFICATION CENTER OF COLORADO

811

CALL 2-BUSINESS DAYS IN ADVANCE BEFORE YOU DIG, GRADE, OR EXCAVATE FOR THE MARKING OF UNDERGROUND MEMBER UTILITIES

REVISIONS: NO.	DATE	REVISION DESCRIPTION:

Boulder County

BOULDER COUNTY PUBLIC WORKS
ENGINEERING DIVISION

DESIGNED:	CAD/C3D:	CHECKED:	DATE:
RL	RL	DW	07/30/2021

MORTON HEIGHTS-2021

SWMP-INITIAL & INTERIM (3)

PROJECT NO: **RS-MOR-001** SHEET NO: **134**

C:\AUTOCAD\PROJECTS\MORTON HEIGHTS\PLAN SET\MORTON-HEIGHTS-SWMP INITIAL 07 OCT 2019.DWG LAST PLOTTED 7/30/2021 12:47 PM

NIWOT ELEMENTARY SCHOOL
8778 MORTON ROAD

MARATHON RD

WALKER AVE

8820
MARATHON ROAD

0+00
1+00
2+00
3+0
14+00
14+41

LDA

LEGEND:

- LIMITS OF CONSTRUCTION
- LDA — LIMITS OF DISTURBED AREA
- EROSION LOG (TYPE 1) (12 INCH) (INITIAL)
- AGGREGATE BAG (INITIAL)
- VEHICLE TRACKING PAD (INITIAL)
- EROSION LOG (TYPE 1) (12 INCH) (INTERIM)
- AGGREGATE BAG (INTERIM)
- SURFACE RUNOFF FLOW ARROW

0 20 40
HORIZONTAL SCALE: 1"=20'

N

FOR CONSTRUCTION

CALL UTILITY NOTIFICATION CENTER OF COLORADO
811
CALL 2-BUSINESS DAYS IN ADVANCE BEFORE YOU DIG, GRADE, OR EXCAVATE FOR THE MARKING OF UNDERGROUND MEMBER UTILITIES

REVISIONS:	NO.	DATE	REVISION DESCRIPTION:

BOULDER COUNTY PUBLIC WORKS
ENGINEERING DIVISION

DESIGNED:	CAD/C3D:	CHECKED:	DATE:
RL	RL	DW	07/30/2021

MORTON HEIGHTS-2021
SWMP-INITIAL & INTERIM (4)
PROJECT NO: **RS-MOR-001** SHEET NO: **135**

C:\AUTOCAD\PROJECTS\MORTON HEIGHTS\PLAN SET\MORTON-HEIGHTS-SWMP INITIAL 07 OCT 2019.DWG LAST PLOTTED 7/30/2021 12:47 PM

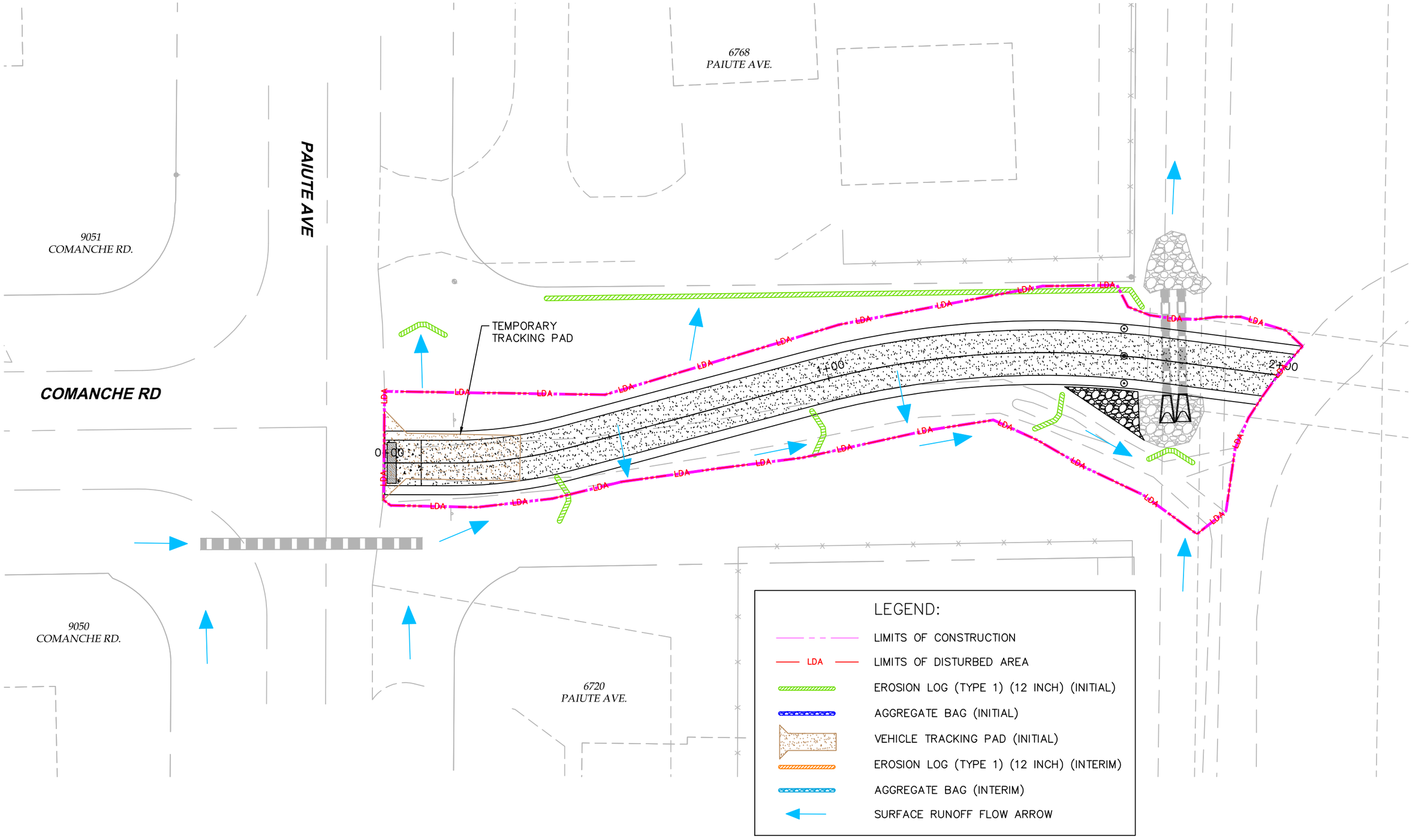

0 20 40
HORIZONTAL SCALE: 1"=20'

N

FOR CONSTRUCTION

CALL UTILITY NOTIFICATION CENTER OF COLORADO
811
CALL 2-BUSINESS DAYS IN ADVANCE BEFORE YOU DIG, GRADE, OR EXCAVATE FOR THE MARKING OF UNDERGROUND MEMBER UTILITIES

REVISIONS: NO.	DATE	REVISION DESCRIPTION:

BOULDER COUNTY PUBLIC WORKS
ENGINEERING DIVISION

DESIGNED:	CAD/C3D:	CHECKED:	DATE:
RL	RL	DW	07/30/2021

MORTON HEIGHTS-2021
SWMP-INITIAL & INTERIM (5)
PROJECT NO: **RS-MOR-001** SHEET NO: **136**

C:\AUTOCAD\PROJECTS\MORTON HEIGHTS\PLAN SET\MORTON-HEIGHTS-SWMP INITIAL 07 OCT 2019.DWG LAST PLOTTED 7/30/2021 12:47 PM

LEGEND:

LIMITS OF CONSTRUCTION

LIMITS OF DISTURBED AREA

TOPSOIL (COMPLETE IN PLACE)
SEEDING (NATIVE MIX)
MULCHING (WEED FREE)

SOIL RIPRAP TYPE VL – 6"

SOIL RIPRAP TYPE L – 9"

SOIL RIPRAP TYPE M – 12"

4–8" ROUNDED RIVER ROCK INLET SURROUND
(DRY RUBBLE S AND D PAVE)

SOIL RETENTION BLANKET (STRAW/COCONUT)
(BIODEGRADABLE CLASS 1)
TOPSOIL (COMPLETE IN PLACE)
SEEDING (NATIVE MIX)

NOTES:

1. SOIL RIPRAP: RIPRAP PRE–MIXED WITH NATIVE SOIL @ 65% RIPRAP, 35% NATIVE SOIL.
2. BROADCAST NATIVE SEED MIX (PLAINS SEED MIX) INTO SOIL RIPRAP SURFACE VOIDS IN ORDER TO RE–ESTABLISH VEGETATION IN DRAINAGE DITCHES.
3. SEE BOULDER COUNTY NATIVE SEED MIXTURES IN THIS PLAN SET.

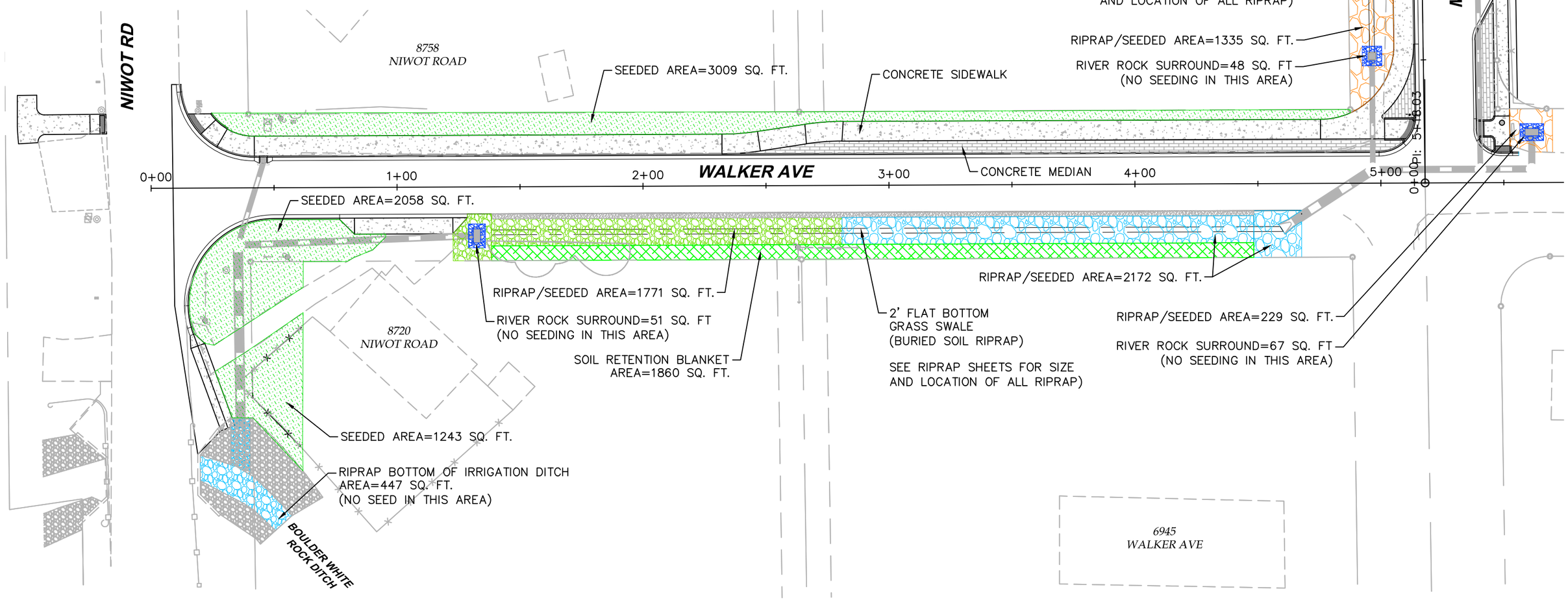

0 40 80

HORIZONTAL SCALE: 1"=40'

FOR CONSTRUCTION

CALL UTILITY NOTIFICATION CENTER OF COLORADO
811
CALL 2–BUSINESS DAYS IN ADVANCE BEFORE YOU DIG, GRADE, OR EXCAVATE FOR THE MARKING OF UNDERGROUND MEMBER UTILITIES

REVISIONS:	NO.	DATE	REVISION DESCRIPTION:

BOULDER COUNTY PUBLIC WORKS
ENGINEERING DIVISION

DESIGNED:	CAD/C3D:	CHECKED:	DATE:
RL	RL	DW	07/30/2021

MORTON HEIGHTS–2021

SWMP-PERMANENT (1)

PROJECT NO: RS-MOR-001 SHEET NO: 137

C:\AUTOCAD\PROJECTS\MORTON HEIGHTS\PLAN SET\MORTON-HEIGHTS-SWMP FINAL 15 OCT 2019.DWG LAST PLOTTED 7/30/2021 12:48 PM

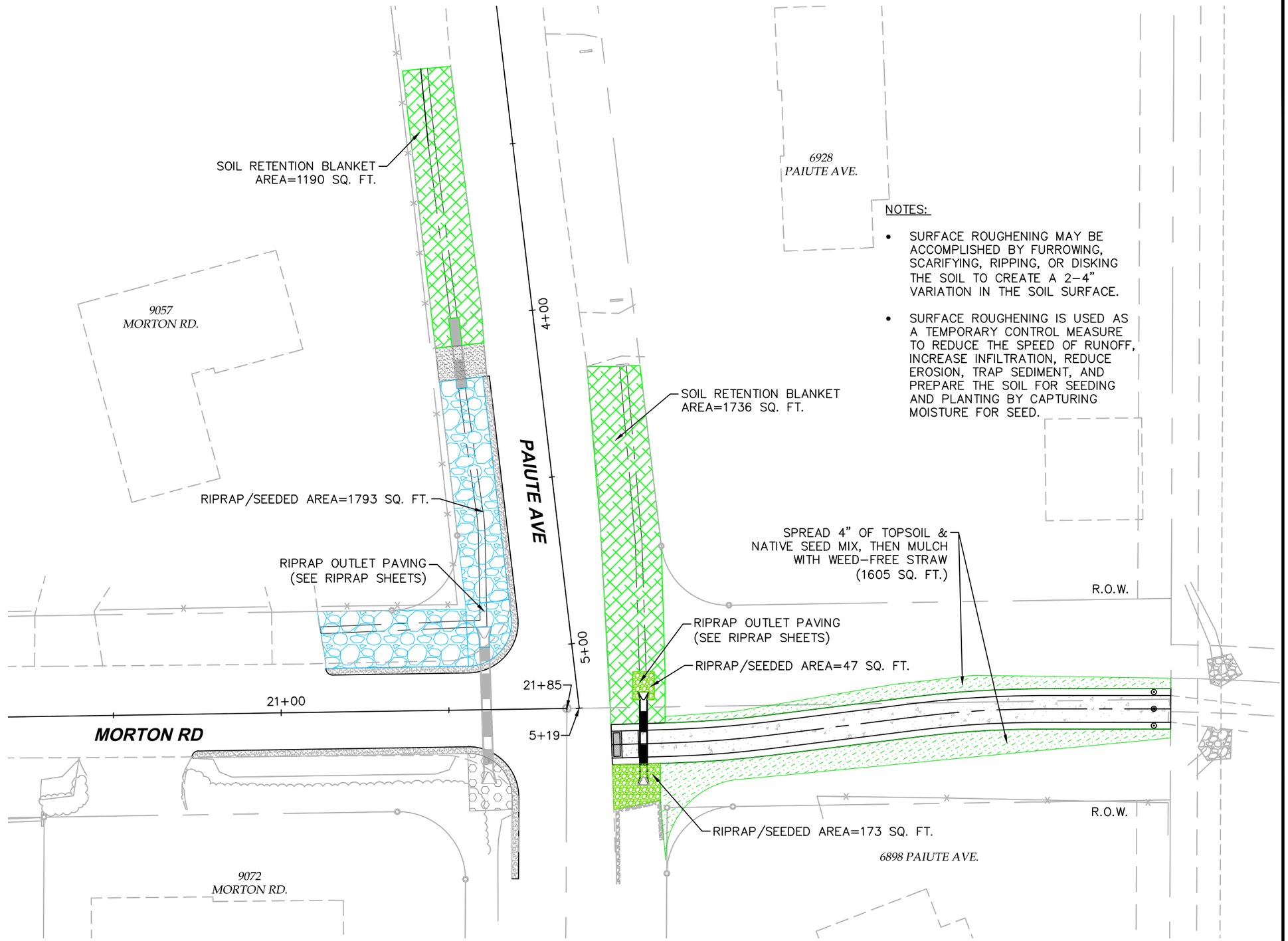

NOTES:

- SURFACE ROUGHENING MAY BE ACCOMPLISHED BY FURROWING, SCARIFYING, RIPPING, OR DISKING THE SOIL TO CREATE A 2–4" VARIATION IN THE SOIL SURFACE.
- SURFACE ROUGHENING IS USED AS A TEMPORARY CONTROL MEASURE TO REDUCE THE SPEED OF RUNOFF, INCREASE INFILTRATION, REDUCE EROSION, TRAP SEDIMENT, AND PREPARE THE SOIL FOR SEEDING AND PLANTING BY CAPTURING MOISTURE FOR SEED.

0 30 60
HORIZONTAL SCALE: 1"=30'

N

FOR CONSTRUCTION

CALL UTILITY NOTIFICATION CENTER OF COLORADO
811
CALL 2-BUSINESS DAYS IN ADVANCE BEFORE YOU DIG, GRADE, OR EXCAVATE FOR THE MARKING OF UNDERGROUND MEMBER UTILITIES

REVISIONS: NO.	DATE	REVISION DESCRIPTION:

BOULDER COUNTY PUBLIC WORKS
ENGINEERING DIVISION

DESIGNED:	CAD/C3D:	CHECKED:	DATE:
RL	RL	DW	07/30/2021

MORTON HEIGHTS–2021
SWMP-PERMANENT (2)
PROJECT NO: **RS-MOR-001** SHEET NO: **138**

C:\AUTOCAD\PROJECTS\MORTON HEIGHTS\PLAN SET\MORTON-HEIGHTS-SWMP FINAL 15 OCT 2019.DWG LAST PLOTTED 7/30/2021 12:48 PM

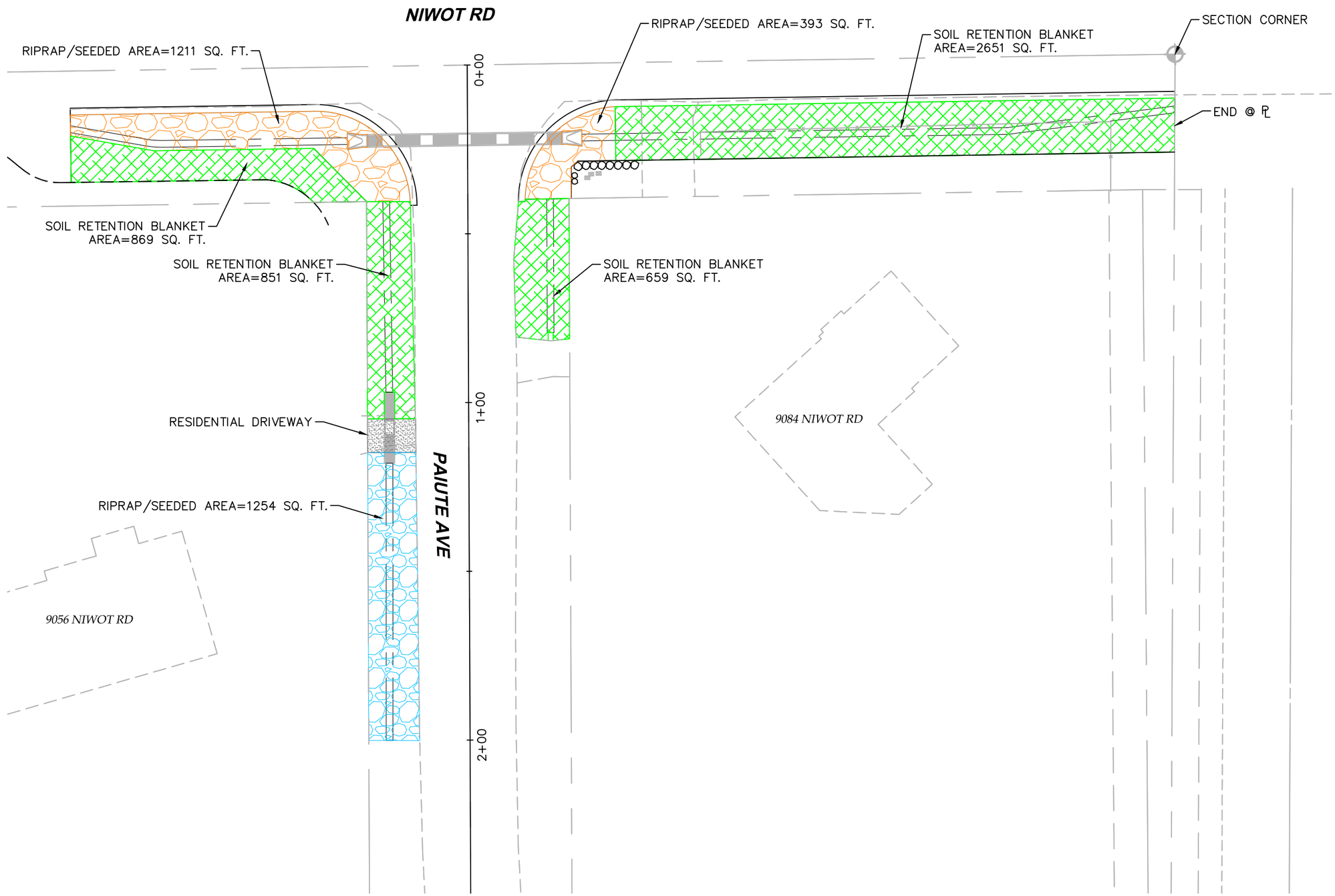

0 30 60

HORIZONTAL SCALE: 1"=30'

N

FOR CONSTRUCTION

CALL UTILITY NOTIFICATION CENTER OF COLORADO

811

CALL 2-BUSINESS DAYS IN ADVANCE BEFORE YOU DIG, GRADE, OR EXCAVATE FOR THE MARKING OF UNDERGROUND MEMBER UTILITIES

REVISIONS:	NO.	DATE	REVISION DESCRIPTION:

BOULDER COUNTY PUBLIC WORKS
ENGINEERING DIVISION

DESIGNED:	CAD/C3D:	CHECKED:	DATE:
RL	RL	DW	07/30/2021

MORTON HEIGHTS-2021

SWMP-PERMANENT (3)

PROJECT NO: **RS-MOR-001** SHEET NO: **139**

C:\AUTOCAD\PROJECTS\MORTON HEIGHTS\PLAN SET\MORTON-HEIGHTS-SWMP FINAL 15 OCT 2019.DWG LAST PLOTTED 7/30/2021 12:48 PM

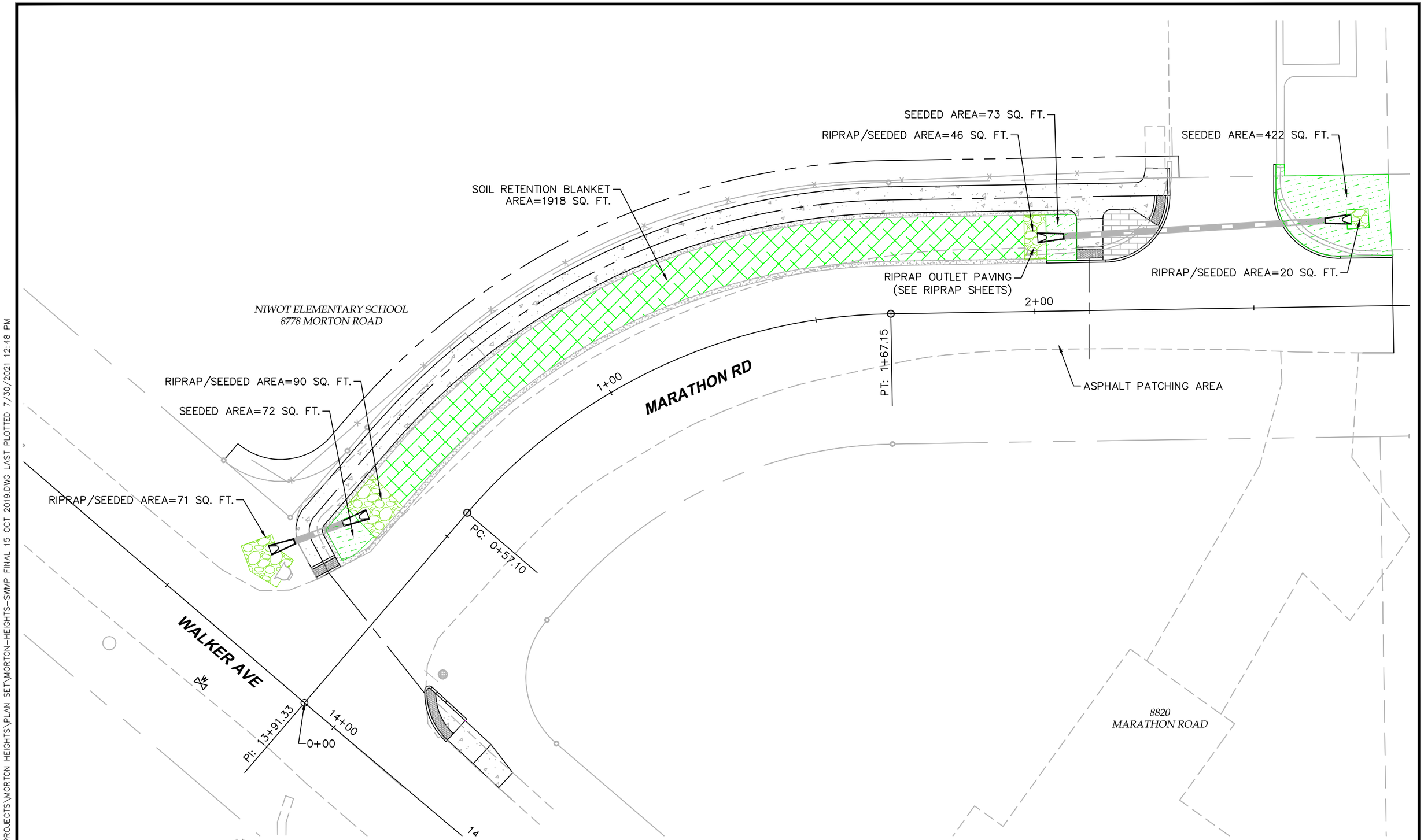

0 20 40

HORIZONTAL SCALE: 1"=20'

N

FOR CONSTRUCTION

CALL UTILITY NOTIFICATION CENTER OF COLORADO

811

CALL 2-BUSINESS DAYS IN ADVANCE BEFORE YOU DIG, GRADE, OR EXCAVATE FOR THE MARKING OF UNDERGROUND MEMBER UTILITIES

REVISIONS:	NO.	DATE	REVISION DESCRIPTION:

BOULDER COUNTY PUBLIC WORKS
ENGINEERING DIVISION

DESIGNED:	CAD/C3D:	CHECKED:	DATE:
RL	RL	DW	07/30/2021

MORTON HEIGHTS–2021

SWMP-PERMANENT (4)

PROJECT NO: **RS-MOR-001** SHEET NO: **140**

C:\AUTOCAD\PROJECTS\MORTON HEIGHTS\PLAN SET\MORTON-HEIGHTS-SWMP FINAL 15 OCT 2019.DWG LAST PLOTTED 7/30/2021 12:48 PM

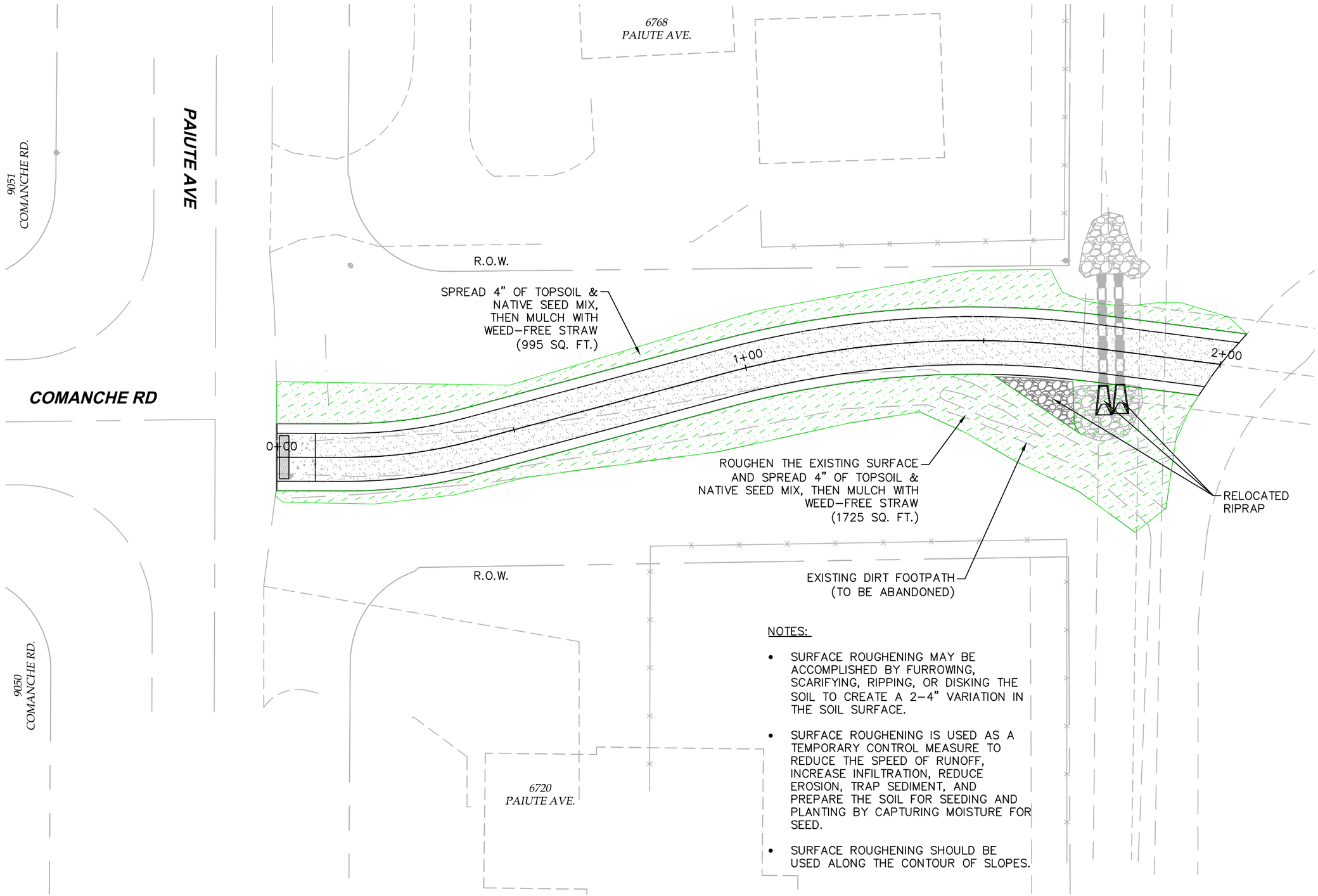

NOTES:

- SURFACE ROUGHENING MAY BE ACCOMPLISHED BY FURROWING, SCARIFYING, RIPPING, OR DISKING THE SOIL TO CREATE A 2-4" VARIATION IN THE SOIL SURFACE.
- SURFACE ROUGHENING IS USED AS A TEMPORARY CONTROL MEASURE TO REDUCE THE SPEED OF RUNOFF, INCREASE INFILTRATION, REDUCE EROSION, TRAP SEDIMENT, AND PREPARE THE SOIL FOR SEEDING AND PLANTING BY CAPTURING MOISTURE FOR SEED.
- SURFACE ROUGHENING SHOULD BE USED ALONG THE CONTOUR OF SLOPES.

0 20 40
HORIZONTAL SCALE: 1"=20'

N

FOR CONSTRUCTION

CALL UTILITY NOTIFICATION CENTER OF COLORADO
811
CALL 2-BUSINESS DAYS IN ADVANCE BEFORE YOU DIG, GRADE, OR EXCAVATE FOR THE MARKING OF UNDERGROUND MEMBER UTILITIES

REVISIONS:	NO.	DATE	REVISION DESCRIPTION:

BOULDER COUNTY PUBLIC WORKS
ENGINEERING DIVISION

DESIGNED:	CAD/C3D:	CHECKED:	DATE:
RL	RL	DW	07/30/2021

MORTON HEIGHTS-2021
SWMP-PERMANENT (5)
PROJECT NO: **RS-MOR-001** SHEET NO: **141**

C:\AUTOCAD\PROJECTS\MORTON HEIGHTS\PLAN SET\MORTON-HEIGHTS-SWMP FINAL 15 OCT 2019.DWG LAST PLOTTED 7/30/2021 12:48 PM